Getting Started

freight100-based robots

Confidential Information

Warning

Before you begin, read the safety and planning instructions on the Help Center, accessible through FetchCore. Failure to observe the safety warnings can result in personal injury or death.

1 Inspect the shipment for damages

Check the sensors mounted on the exterior of the box for mishandling. If you notice damage, contact Customer Support at fetchcare@fetchrobotics.com.

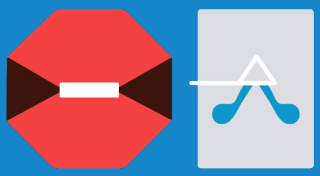

2 Unpack the robot

A. Unclasp and open the front panel.

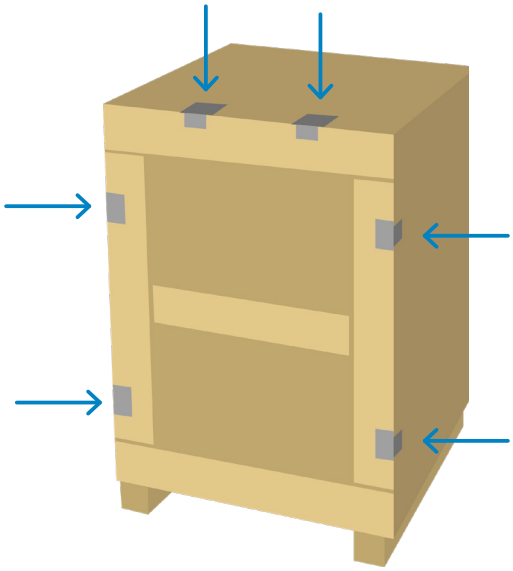

B. Create the ramp.

For TagSurveyor robots: Align the front panel that you just removed with the velcro strips at the bottom of the crate to create the ramp.

For all other robots: Release the black safety strap, put the ramp support in place, and unfold the ramp until it is properly seated on the ground.

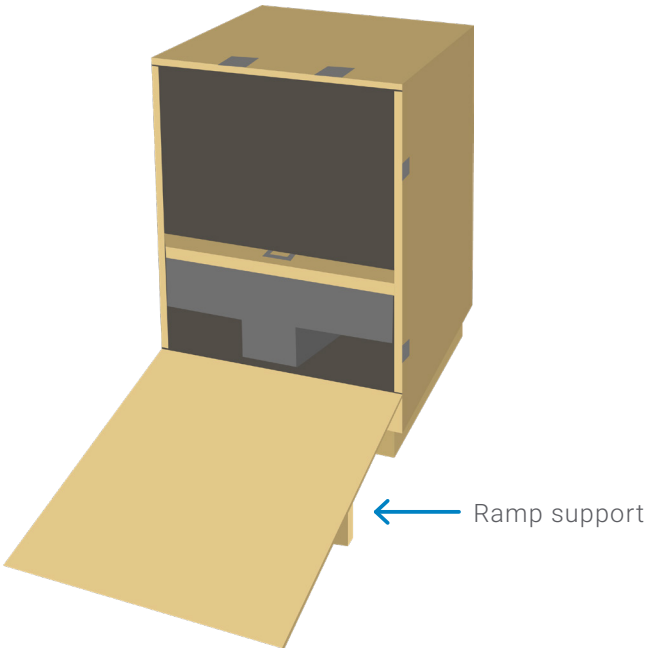

C. Remove the wooden support brace.
Tagsurveyor robots have an upper and lower brace.

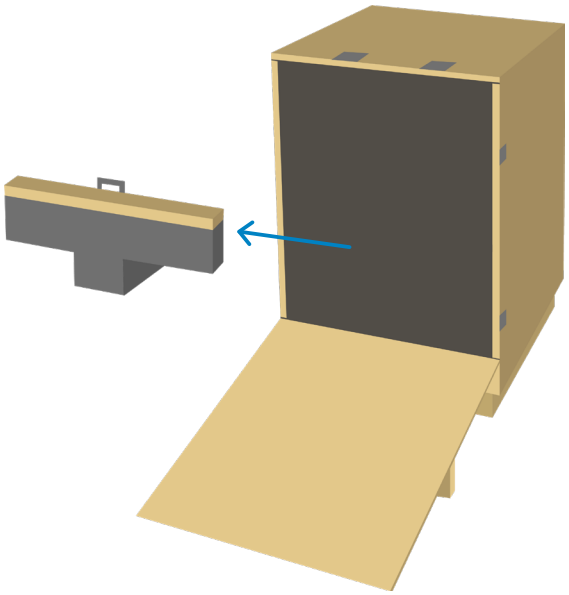

D. Use scissors to free the robot from the protective bag.

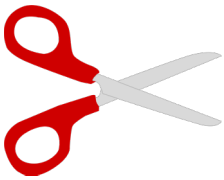

E. Slowly roll the robot out of the crate and down the ramp.

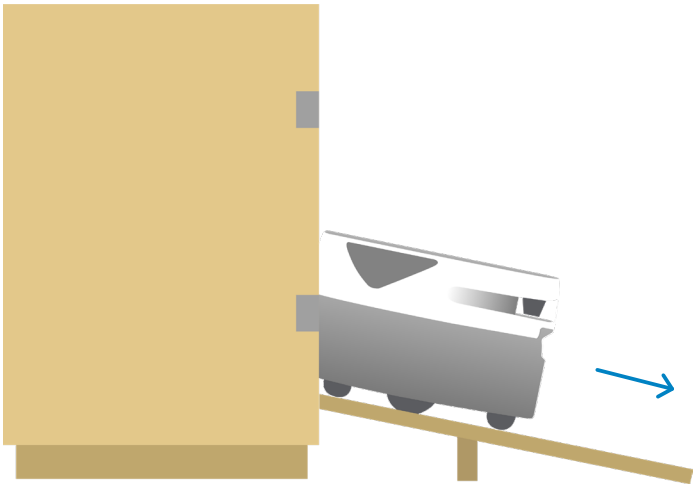

F. Carefully remove any other packaging material from the robot.
RollerTop robots: remove the risers between the RollerTop accessory and the Freight100 base.

G. If included, remove all accessories kits from the crate.

3 Turn on the robot

A. Set the battery disconnect switch to ON (I).

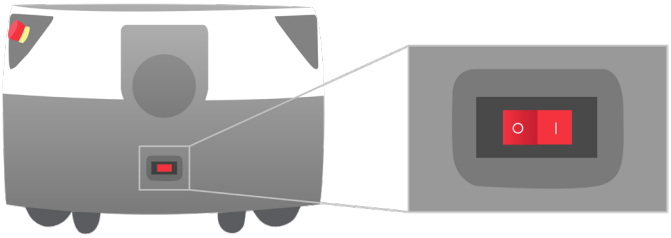

B. Press the power button until the lights turn on.

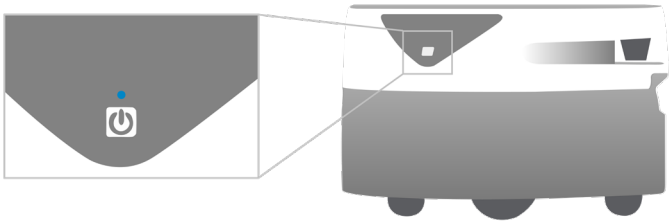

4 Connect the robot to WiFi

Go to:

company.fetchcore-cloud.com/management/#/wifi-setup

Where ***company*** is replaced with the name of your server that was provided to you. Follow the on-screen instructions to connect your robot to Wi-Fi.

What's Next?

Install charge docks (shipped separately).

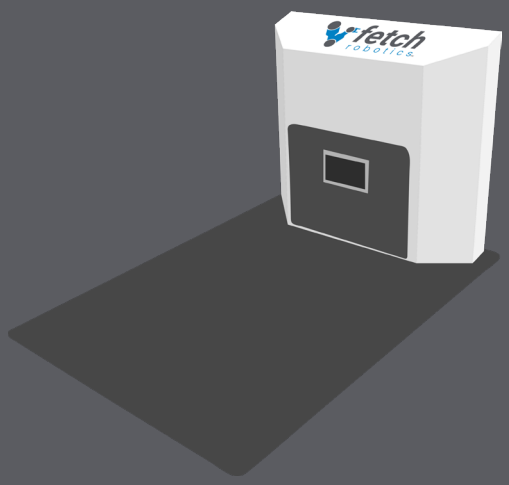

Access the Help Center through FetchCore to learn how to create a map of your facility and set up WorkFlows.

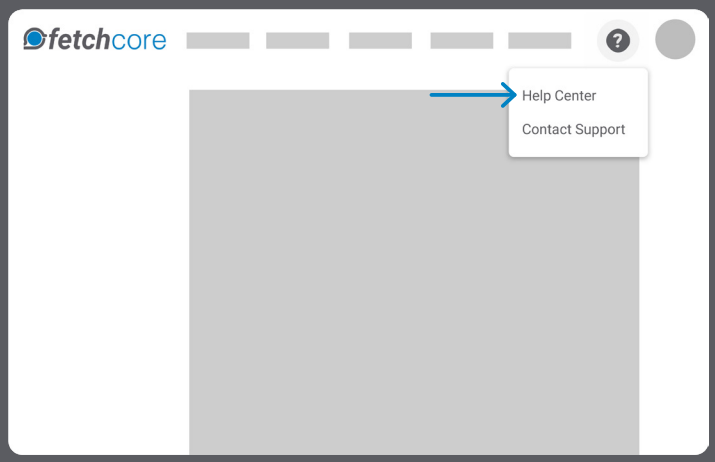

www.***fetch***robotics.com | ***fetchcare***@***fetch***robotics.com | +1 833.693.3824

Copyright © 2020 by Fetch Robotics, Inc. All rights reserved.