This article has been accepted for publication in a future issue of this journal, but has not been fully edited. Content may change prior to final publication. Citation information: DOI 10.1109/TCPMT.2018.2864183, IEEE Transactions on Components, Packaging and Manufacturing Technology

Insertion Loss Characterization of Impedance Matching Networks for Low-Power Rectennas

Yen-Sheng Chen, *Member*, *IEEE* and Cheng-Wei Chiu

***Abstract*—An impedance matching network inserted between an antenna and a rectifier is essential for rectennas, but few studies have characterized the insertion loss of the matching network if non-ideal matching elements are considered. In general, the matching elements, including lumped capacitors, lumped inductors, and transmission lines, are approximated as lossless; if the overall conversion efficiency decreases, the underlying reason seldom attributes to the loss of the matching network. In this paper, we derive the insertion loss of the matching network comprising actual lumped elements and transmission lines. The loss is quantified using the operating power gain of a two-port network, which varies with different levels of input power. When the input power ranges between –30 dBm and 0 dBm, more than 95%, 90%, and 75% of power dissipates at 900 MHz, 1.8 GHz, and 2.4 GHz, respectively, due to the use of actual matching elements. The numerical results are verified by experimental data, and all the analysis demonstrates that the loss of the matching network becomes very serious as the input power is low. These observations are explained using the contour plot of operating power gain. Accordingly, this study provides theoretical development for rectenna designers.**

***Index Terms*—Energy harvesting, impedance matching, power transmission, rectennas, rectifiers.**

I. Introduction

RECENTLY, there has been increasing research interest in far-field and low-power wireless power transfer (WPT), and the emergent technology has been deployed in various applications, such as radio-frequency (RF) energy harvesting. To enhance the system performance of WPT, a number of studies have been conducted on the efficiency improvements of low-power rectennas. The low-power rectenna consists of three major components, including an antenna, an impedance matching network, and a rectifier connected to a load. Such a rectenna structure can be illustrated using Fig. 1 (a). As the antenna collects RF energy and transmits it to the succeeding circuitry, the impedance matching network minimizes power reflections from the rectifier. In general, earlier studies put more emphasis on research issues related to antenna design and rectifier development. For the aspect of antenna design, considerable attentions have been paid on broadband design [1], multiband design [2], polarization diversity [3], and highly directive features [4] to gather higher RF power. As for the aspect of rectifier development, many advances have been made on the optimization of circuit parameters [5], improved rectifier circuits [6], optimized waveform excitation [7], and improvements of RF-dc conversion techniques [8], [9]. However, comparatively little research has focused on the theoretical development of the matching circuit for low-power rectennas. Although some studies have addressed advanced techniques such as broadband characteristics [10] and reconfigurable operation [11] for the matching network, most of the literature applies simple *LC* networks [12], single-stub tuners [13], or double-stub tuners [14] to the design of the impedance matching circuit.

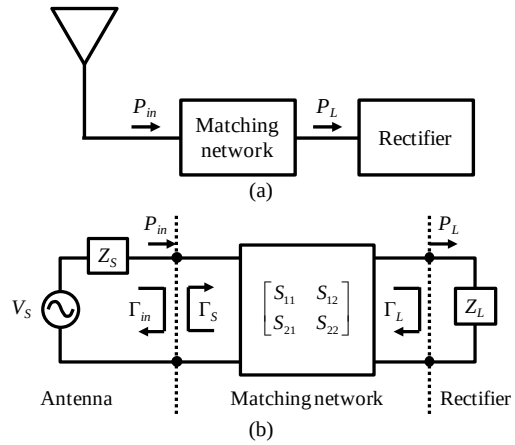

Fig. 1. An impedance matching network used in low-power rectennas. (a) Block diagram of the rectennas and (b) schematic representation of a terminated matching network.

The issue of relatively little discussion on the matching network is because its design goal is considered as straightforward. Conventionally, the literature only aims at minimizing power reflections from the rectifier, but the additional loss of the matching circuit is treated as acceptable or imperceptible. Because the matching elements including lumped capacitors, lumped inductors, and transmission lines prevent the use of lossy components, such as resistors or highly conductive substrates, earlier studies tend to overlook the associated component loss, and thus this issue has not yet been rigorously investigated. In addition, the loss of the matching network has not been treated as the function of input power, denoted as P_{in}. However, as will be shown, the insertion loss of the matching circuit can be indeed neglected if the input power is high ($P_{in} \geq 10$ dBm), but such additional loss is very severe for low-power situations. In fact, the overall conversion

This work was supported by the Ministry of Science and Technology, Taiwan, under Contract MOST 107-2636-E-027-001.

Y.-S. Chen and C.-W. Chiu are with the Department of Electronic Engineering, National Taipei University of Technology, Taipei 10608, Taiwan (phone: +866-2-27712171-2281; fax: +866-2-27317120; E-mail: yschen@ntut.edu.tw).

2156-3950 (c) 2018 IEEE. Personal use is permitted, but republication/redistribution requires IEEE permission. See http://www.ieee.org/publications_standards/publications/rights/index.html for more information.

This article has been accepted for publication in a future issue of this journal, but has not been fully edited. Content may change prior to final publication. Citation information: DOI 10.1109/TCPMT.2018.2864183, IEEE Transactions on Components, Packaging and Manufacturing Technology

efficiency of a rectenna is more adversely affected by the matching network than by the antenna design or rectifier development as $P_{in} \leq 0$ dBm.

The purpose of this paper is to characterize the loss of the matching network as the function of input power. The range of input power that we investigate is –30 dBm $\leq P_{in} \leq 0$ dBm. The loss of various matching techniques, including *LC* networks, single-stub tuners, and double-stub tuners, is analyzed over the interesting power range. We will report that in the worst case more than 95%, 90%, 75%, and 40% of power dissipates at 900 MHz, 1.8 GHz, 2.4 GHz, and 5.8 GHz, respectively. Although perfect impedance matching is achieved, the overall conversion efficiency decreases significantly due to the high Q factor of the rectifier impedance. In particular, a number of studies that design microwave energy harvesters at 900 MHz use an external matching network, yet the total conversion efficiency can be improved if these rectennas remove the use of the matching network. These observations are verified by performing simulation and measurement, and the underlying reasons will be clarified.

Although some efforts have addressed the insertion loss of impedance matching networks [15]–[18], few studies concerning this issue are closely related to rectennas for WPT [19]. More specifically, the insertion loss of matching networks generates considerable discussion on the conditions for lossy matching elements achieving the maximum power transfer to a purely resistive load [15], methods for finding the globally optimal impedance transformation network with lossy matching passives [16], analysis of insertion loss for transmission-line-based matching networks [17], and design of lossy matching networks enhancing broadband performance [18], but we lack investigation into the influence of the insertion loss on the conversion efficiency of rectennas. Thus, it is hoped that this paper provides theoretical development of low-power WPT for rectenna designers.

II. Input Impedance of the Rectifier

The insertion loss problem of the matching network can be schematized using Fig. 1 (b). The matching network is considered as a terminated two-port network with given scattering parameters, denoted as S_{mn}. The port 1 is connected to the antenna, the impedance of which is Z_S. The port 2 is cascaded with the rectifier, the input impedance of which is Z_L. The power delivered to the rectifier is denoted as P_L. Γ_{in} is the input reflection coefficient when the matching network is cascaded with the rectifier, and Γ_L is the reflection coefficient of the matching network looking into the rectifier.

As the purpose of the matching network is to match the highly capacitive Z_L to Z_S, which is selected as 50 Ω in most of the literature, the first step of analysis procedure is to determine the targeted Z_L. In general, four rectifier topologies are commonly used for low-power rectennas: half-wave rectifiers, single-stage voltage multipliers, Greinacher charge pumps, and Dickson charge pumps; their topologies are shown in Fig. 2. The input impedance of these rectifiers is determined by the filtering capacitance C_L and the load resistance R_L. Among the

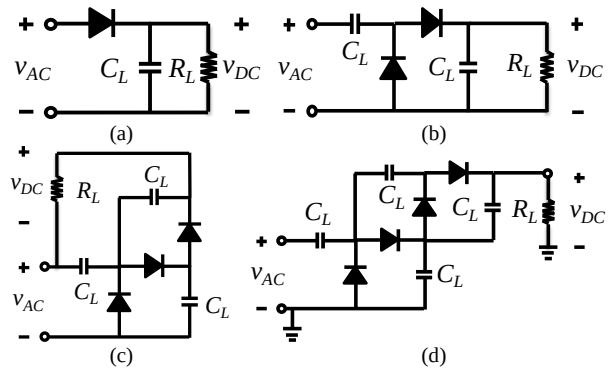

Fig. 2. Rectifier deigns used in low-power rectennas. (a) A half-wave rectifier, (b) a single-stage voltage multiplier, (c) a Greinacher charge pump, and (d) a Dickson charge pump.

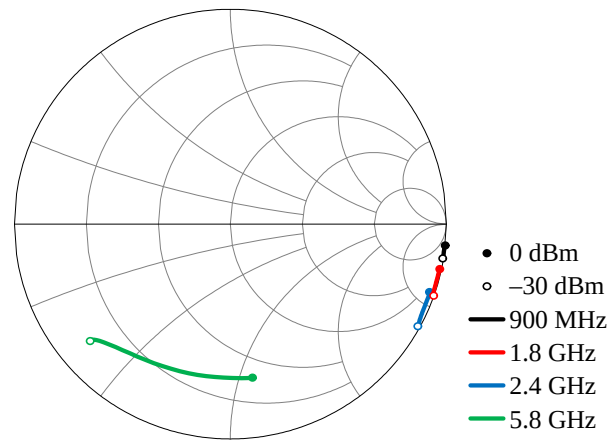

Fig. 3. Input impedance of rectifiers with optimal parameters at different frequencies.

four choices, the half-wave rectifier has been demonstrated that it leads to the maximum achievable power conversion efficiency due to less component loss [20]; therefore, we select the half-wave rectifier as the terminated load of the matching network. The rectifying device used is the Schottky diode HSMS-286C from Avago. The rectifier parameters including R_L and C_L are optimized to have the maximum average conversion efficiency over –20 dBm $\leq P_{in} \leq 0$ dBm, and this optimization process is repeated for 900 MHz, 1.8 GHz, 2.4 GHz, and 5.8 GHz. The structure analysis tool is ADS simulation. As a result, the optimal parameters are R_L = 73 kΩ and C_L = 10 pF for 900 MHz, R_L = 27 kΩ and C_L = 10 pF for 1.8 GHz, R_L = 10 kΩ and C_L = 10 pF for 2.4 GHz, and R_L = 2 kΩ and C_L = 10 pF for 5.8 GHz.

The associated input impedance of the rectifier is shown in Fig. 3. In particular, the input impedance for P_{in} = –10 dBm is 21.9 – *j*872.6 Ω at 900 MHz, 13.6 – *j*380.0 Ω at 1.8 GHz, 14.1 – *j*245.9 Ω at 2.4 GHz, and 10.0 – *j*26.3 Ω at 5.8 GH. These impedances are poorly matched to Z_S and highly capacitive, and the input resistances are particularly small as compared to the magnitude of input reactances. In addition, the reactance becomes more capacitive as the frequency decreases; the input reactance of the 900-MHz rectifier is more significant and capacitive than that of the other rectifiers. Although we select the optimum half-wave rectifier as the terminated load, the other rectifier topologies have similar impedance

2156-3950 (c) 2018 IEEE. Personal use is permitted, but republication/redistribution requires IEEE permission. See http://www.ieee.org/publications_standards/publications/rights/index.html for more information.

This article has been accepted for publication in a future issue of this journal, but has not been fully edited. Content may change prior to final publication. Citation information: DOI 10.1109/TCPMT.2018.2864183, IEEE Transactions on Components, Packaging and Manufacturing Technology

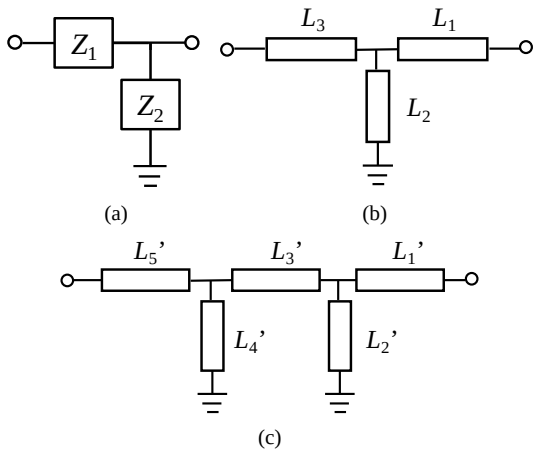

Fig. 4. Different techniques for impedance matching. (a) An *LC* network, (b) a single-stub impedance tuner, and (c) a double-stub impedance tuner.

characteristics. Their input reactance is also poorly matched and highly capacitive.

III. Insertion Loss of the Matching Network

Next, three matching techniques are adopted to study the loss of the matching circuit: *LC* networks, single-stub tuners, and double-stub tuners. The circuit topologies and the associated design parameters are shown in Fig. 4. To emulate the loss of actual matching elements, in ADS simulation the capacitors and inductors are modeled as GRM 15 series and LQP 15 series, respectively, all from Murata. Besides, the loss of the transmission-line-based techniques is emulated by using microstrip lines fabricated on FR4 (dielectric constant ε_r = 4.4 and loss tangent tanδ = 0.02) and Rogers Corp. Duroid 5880 (ε_r = 2.2 and tanδ = 0.0004) substrates, respectively.

These matching networks are designed at 900 MHz, 1.8 GHz, 2.4 GHz, and 5.8 GHz, respectively, and the design parameters are optimized to have good impedance matching at P_{in} = –10 dBm. That is, the value of lumped elements for *LC* networks (Z_1 and Z_2) and the length of transmission lines for single-stub and double-stub tuners (L_1, L_2, L_3, L_1', L_2', L_3', L_4', and L_5') are optimized to have minimized $|\Gamma_{in}|$ at P_{in} = –10 dBm. The resultant input reflection coefficients for the 2.4-GHz case are shown in Fig. 5. It can be seen that three impedance tuners achieve more than 20 dB of return loss at P_{in} = –10 dBm. For verification purpose, we fabricate the optimal single-stub and double-stub tuners designed on FR4 and test their impedance matching; the measured results are also provided in Fig. 5. Both the simulated and measured data confirm that good impedance matching has been attained at the targeted input power.

The insertion loss of the matching circuit can be characterized by the ratio of power transmitted to the rectifier to the input of the matching network, which can be expressed as the operating power gain [21], denoted as G_p:

$$G_p = \frac{P_L}{P_{in}} = \frac{1}{1-|\Gamma_{in}|^2}|S_{21}|^2 \frac{1-|\Gamma_L|^2}{|1-S_{22}\Gamma_L|^2}. \quad (1)$$

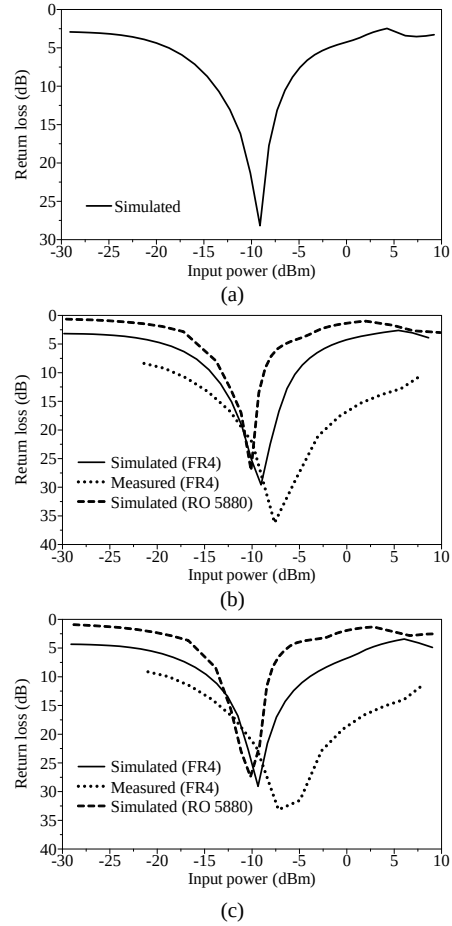

Fig. 5. Simulated and measured return loss of matching networks cascaded with rectifiers at 2.4 GHz. (a) An *LC* network, (b) single-stub impedance tuners, and (c) double-stub impedance tuners.

The parameters of (1) have been explained by using Fig. 1 (b). The scattering parameters are simulated and measured by designing an optimum matching network that meets the design requirement, including a 50-Ω input impedance and a highly inductive output impedance that achieves conjugate match to the input impedance of the rectifier. Γ_L is computed by using the input impedance of the rectifier. In ADS simulation, the impedance can be obtained by removing the matching network and evaluating the impedance characteristics; afterward, Γ_L can be computed by the expression of reflection coefficient. In measurement, the impedance is evaluated considering two scenarios. In the first scenario, we fabricate the rectifier circuit without a connected matching network. If the power of a vector network analyzer (VNA) can be transferred to the rectifier, then we can directly measure the associated impedance characteristics and compute the reflection coefficient. In the second scenario, in some cases the input impedance of the fabricated rectifier is so highly capacitive that the VNA cannot power the rectifier. The underlying reason is the impedance mismatch, which leads to significant power reflection to the VNA and insufficient power to the rectifier. In this scenario, the input impedance of the rectifier has to be measured by cascading with a matching network so that the rectifier can be powered by the VNA. Next, we fabricate the matching circuit, which is constructed as a two-port network, calibrating the

2156-3950 (c) 2018 IEEE. Personal use is permitted, but republication/redistribution requires IEEE permission. See http://www.ieee.org/publications_standards/publications/rights/index.html for more information.

This article has been accepted for publication in a future issue of this journal, but has not been fully edited. Content may change prior to final publication. Citation information: DOI 10.1109/TCPMT.2018.2864183, IEEE Transactions on Components, Packaging and Manufacturing Technology

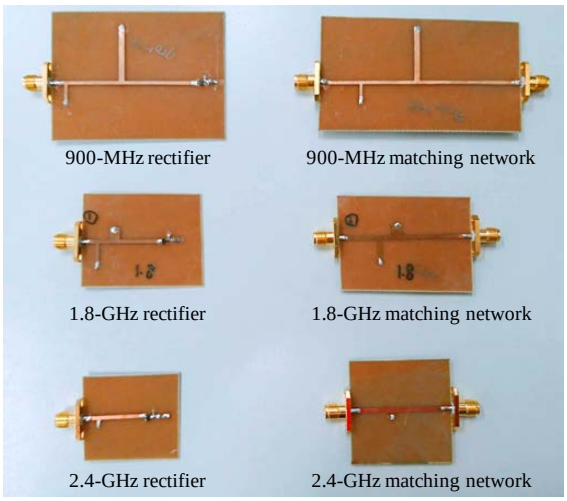

Fig. 6. Photograph of the test pieces of the optimum half-wave rectifiers and the associated matching networks.

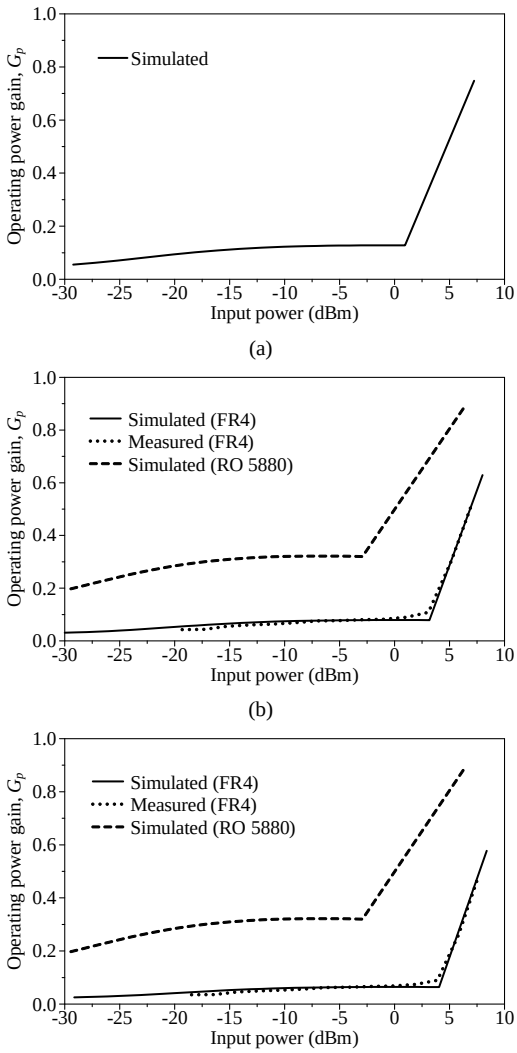

Fig. 7. Simulated and measured operating power gain of matching networks at 900 MHz. (a) An *LC* network, (b) single-stub impedance tuners, and (c) double-stub impedance tuners.

resultant effect by using the measured ABCD matrix. This operation leads to the input impedance of the rectifier, and thus

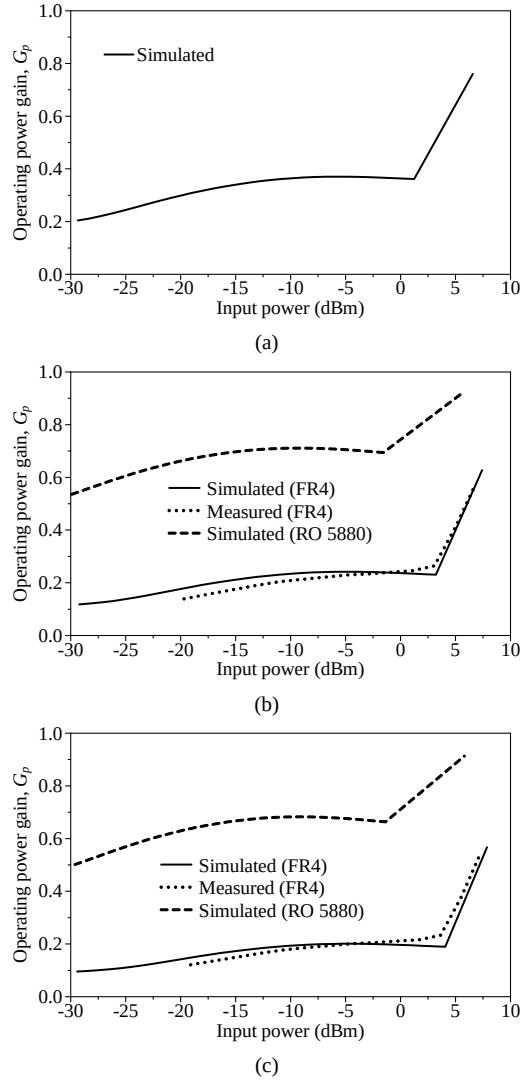

Fig. 8. Simulated and measured operating power gain of matching networks at 1.8 GHz. (a) An *LC* network, (b) single-stub impedance tuners, and (c) double-stub impedance tuners.

we can compute the associated reflection coefficient. The photograph of the test pieces are shown in Fig. 6. Substituting the associated parameters into (1), the simulated and measured G_p are represented in Figs. 7, 8, 9, and 10. The simulated results agree very well with the measured ones, validating the data presented in these figures.

These figures are the centerpiece of this work, which illustrates that the insertion loss of the matching circuit will be particularly severe for low-power situations. First of all, the 900-MHz matching circuits incur the most significant loss, as shown in Fig. 7. As the input power is lower than 0 dBm, more than 90% of power is dissipated if the *LC* network and the transmission-line-based tuners fabricated on FR4 are used. Even though Rogers Corp. Duroid 5880 is selected as the substrate of transmission lines, still more than 70% of power is consumed due to the finite conductivity of the substrate. Such low G_p cannot be improved unless the level of input power increases. The trend shows that as $P_{in} > 0$ dBm the additional loss of the matching network decreases rapidly.

2156-3950 (c) 2018 IEEE. Personal use is permitted, but republication/redistribution requires IEEE permission. See http://www.ieee.org/publications_standards/publications/rights/index.html for more information.

This article has been accepted for publication in a future issue of this journal, but has not been fully edited. Content may change prior to final publication. Citation information: DOI 10.1109/TCPMT.2018.2864183, IEEE Transactions on Components, Packaging and Manufacturing Technology

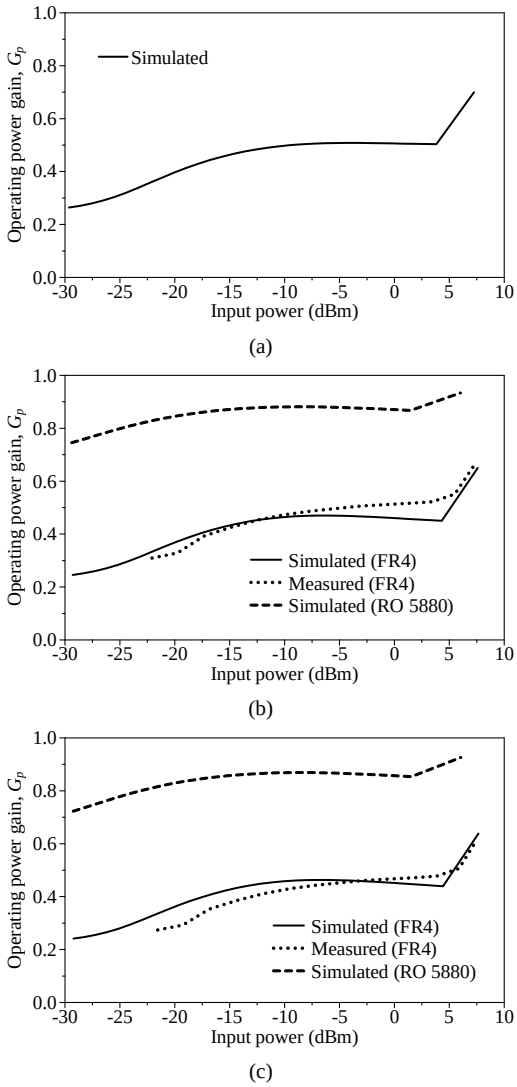

Fig. 9. Simulated and measured operating power gain of matching networks at 2.4 GHz. (a) An *LC* network, (b) single-stub impedance tuners, and (c) double-stub impedance tuners.

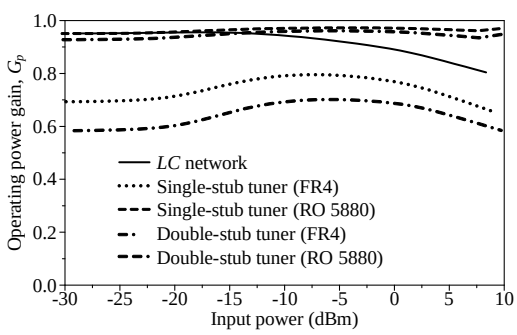

Fig. 10. Simulated operating power gain of matching networks at 5.8 GHz.

When the rectenna is designed at 1.8 GHz, significant loss is still incurred by the matching circuit. For the *LC* network and the FR4-based tuners, the measured and simulated results shown in Fig. 8 illustrate that only 20% of power is transferred to the rectifier when $P_{in} \leq 0$ dBm, although good impedance matching has been obtained. This further suggests that the overall conversion efficiency of the rectenna receives a discount of 80%, which lowers system performance

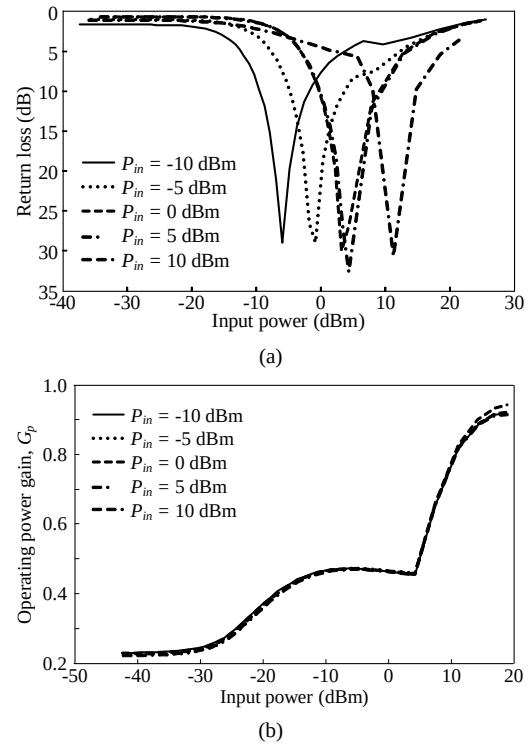

Fig. 11. Operating power gain at 2.4 GHz as the designed input power is varied. (a) Return loss of matching circuits cascaded with the half-wave rectifier, and (b) the corresponding operating power gain.

dramatically. If Rogers Corp. Duroid 5880 is used as the substrate of transmission lines, the loss of the matching network can be mitigated; however, the cost of fabrication will escalate, so a number of rectennas designed at this frequency still use FR4 as a substrate.

As the designed frequency of the rectenna is increased to 2.4 GHz, the loss of the matching circuit is reduced progressively, as shown in Fig. 9. However, more than 50% of power is lost because of the matching elements unless Rogers Corp. Duroid 5880 is used. Moreover, the additional loss is particularly high for $P_{in} \leq 0$ dBm. Only 5.8-GHz rectennas successfully transmit most of the power to the rectifier. Fig. 10 indicates that the 5.8-GHz matching circuits have the slightest loss among the four frequencies. Nevertheless, this frequency generally leads to low overall conversion efficiency for low-power rectennas [20].

The above-mentioned analysis is performed by designing the matching network at $P_{in} = -10$ dBm; however, all the results are valid if the matching circuit is designed at other levels of input power. For example, we vary the designed input power of the 2.4-GHz single-stub tuner fabricated on FR4, obtaining optimal designs that have maximized input return loss at each designed input power. The associated reflection coefficients are shown in Fig. 11 (a), which demonstrates that good impedance matching is achieved by using each matching network. However, the associated operating power gain is substantially the same, as shown in Fig. 11 (b). This further indicates that the insertion loss of the matching network is not related to the designed input power. Thus, the results obtained have validity for varied targeted input power.

2156-3950 (c) 2018 IEEE. Personal use is permitted, but republication/redistribution requires IEEE permission. See http://www.ieee.org/publications_standards/publications/rights/index.html for more information.

This article has been accepted for publication in a future issue of this journal, but has not been fully edited. Content may change prior to final publication. Citation information: DOI 10.1109/TCPMT.2018.2864183, IEEE Transactions on Components, Packaging and Manufacturing Technology

IV. Results and Discussion

Now we have seen that the insertion loss of the matching network cannot be overlooked for low-power rectennas. In fact, the loss due to the matching circuits makes a greater impact on the overall conversion efficiency than the RF-dc rectifier efficiency does. If relatively low-cost substrates such as FR4 are used, the antenna impedance should be designed to have a directly conjugate match to the input impedance of the rectifier, instead of Z_S = 50 Ω, which is widely-used in the literature. That is, the impedance matching network must be eliminated for low-power rectennas fabricated on FR4.

Moreover, if a low-power rectenna is designed to harvest 900-MHz ambient energy [11], [22]–[24], the impedance matching network should be removed even though low-loss substrates such as Rogers Corp. Duroid 5880 are used. In this situation, less than 20% of power can transfer to the rectifier whatever matching topology is designed. In addition, the low-power condition of WPT systems makes the rectifier almost not in work due to the non-zero cut-in voltage of diode switches. If the cut-in voltage can be reduced, such as by the use of CMOS transistors, the optimum load resistance can be increased effectively even in low-power scenarios, and so does the matching efficiency. However, diode switches are known to have low cost, good power handling ability, and high efficiency, so they are still the most widely-used rectifying technique in low-power rectennas.

Inherently, G_p in (1) is not the function of input power, but we have observed that the insertion loss is particularly severe for low-power situations. Although the level of input power is not directly expressed in (1), as shown in Fig. 3 the input impedance of the rectifier is closely related to input power, and such impedance affects Γ_{in} and Γ_L in (1). Thus, G_p is eventually varied with the level of input power. More explicitly, the level curves of G_p, versus the input resistance and input reactance of the rectifier, denoted as R_{in} and X_{in}, respectively, are shown in Figs. 12, 13, 14, and 15. The four figures illustrate how G_p is correlated with R_{in} and X_{in} at the four targeted frequencies. Only lossless matching networks can have G_p = 1, namely, G_p = 0 dB; if a matching network is constructed using actual matching elements, the curve of other G_p levels appears. Accordingly, the "sweet spot" of the level curves is defined as the area with larger G_p.

The underlying reason of the insertion loss of the matching circuit can be investigated using these figures. First of all, the range of the input impedance at 900 MHz over –30 dBm ≤ P_{in} ≤ 0 dBm is 8 Ω ≤ R_{in} ≤ 25 Ω and –915 Ω ≤ X_{in} ≤ –640 Ω. Such impedance characteristics lead to high Q factors, and the ratio of the magnitude of the input reactance to the input resistance is as high as 50. According to the results of a classic paper [15], the additional loss may run to 10 dB. The associated level curves shown in Fig. 12 exhibit small G_p, whatever matching topologies are used. However, the sweet spot of G_p is the area having small $|X_{in}|$ and large R_{in}. If the single-stub tuner is fabricated on Rogers Corp. Duroid 5880, the area of sweet spot increases, but the input impedance of the rectifier still locates far away from the sweet spot.

At 1.8 GHz, the range of the input impedance of the rectifier is 4 Ω ≤ R_{in} ≤ 20 Ω and –450 Ω ≤ X_{in} ≤ –290 Ω. Similarly, the corresponding area in Fig. 13 is outside the sweet spot of G_p. Although using Rogers Corp. Duroid 5880 leads to a larger sweet spot, the input resistance of the rectifier is too small to move the associated G_p to these locations in low-power scenarios.

Similar observations can be made for the level curves of 2.4-GHz matching networks. The range of the input impedance of the rectifier is 4 Ω ≤ R_{in} ≤ 23 Ω and –320 Ω ≤ X_{in} ≤ –200 Ω. As shown in Fig. 14, only by using Rogers Corp. Duroid 5880 can we obtain a large G_p. On the other hand, Fig. 3 also shows that the input resistance of the rectifier is comparatively large for high-power scenarios such as P_{in} ≥ 5 dBm, so the corresponding G_p is satisfactory. Since earlier studies concerning rectenna design put more emphasis on those having high input power, the insertion loss of the matching networks has not yet been given the attention it needs.

At 5.8 GHz, the input reactance of the rectifier becomes less capacitive (–50 Ω ≤ X_{in} ≤ –20 Ω). Although the input resistance of the rectifier remains the same level, such input reactance brings G_p to the sweet spot for all the matching topologies, as shown in Fig. 15. As a result, only this designed frequency can provide us low insertion loss.

Another interesting result is that the insertion loss of the matching circuit is more severe at the low designed frequency than that at the high frequency. This is an observation in conflict with our technical knowledge, for generally the higher the designed frequency the larger the component loss is. In fact, when we overlap Figs. 12, 13, 14, and 15 for each matching technique, the area of the sweet spot and the designed frequency are closely related but in opposite directions. That is, the component loss of a matching network indeed increases with the designed frequency. However, the input reactance of the rectifier is more highly capacitive for the low design frequency, and the effect of capacitive reactance brings G_p apart from the sweet spot drastically, although the area of the sweet spot slightly increases. In summary, Figs. 12, 13, 14, and 15 explain the insertion loss characterization of the matching network for low-power rectennas.

V. Overall Conversion Efficiency

After characterizing the insertion loss of the matching network, we analyze how such additional loss influences the overall RF-dc conversion efficiency. As stated in Section II, the RF-dc conversion efficiency is the function of R_L and C_L. To evaluate the maximum RF-dc conversion efficiency for the energy-harvesting circuit comprising an impedance matching network and a rectifier, the analysis is performed in three stages. At first, we aim at determining the rectifier topology that leads to the maximum rectifying efficiency among the four circuits. We evaluate the maximum average conversion efficiency over –20 dBm ≤ P_{in} ≤ 0 dBm by performing parameter studies

2156-3950 (c) 2018 IEEE. Personal use is permitted, but republication/redistribution requires IEEE permission. See http://www.ieee.org/publications_standards/publications/rights/index.html for more information.

This article has been accepted for publication in a future issue of this journal, but has not been fully edited. Content may change prior to final publication. Citation information: DOI 10.1109/TCPMT.2018.2864183, IEEE Transactions on Components, Packaging and Manufacturing Technology

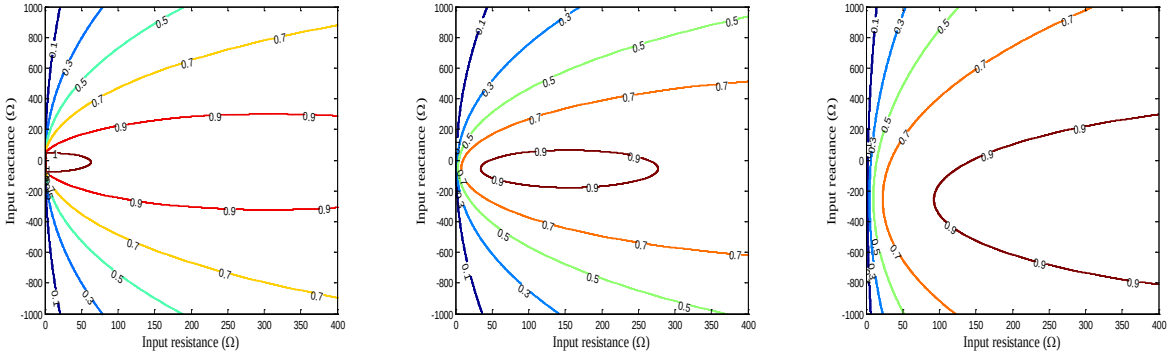

(a) (b) (c)

Fig. 12. Level curves of operating power gain at 900 MHz. (a) An *LC* network and single-stub tuners fabricated on (b) FR4 and (c) RO 5880, respectively.

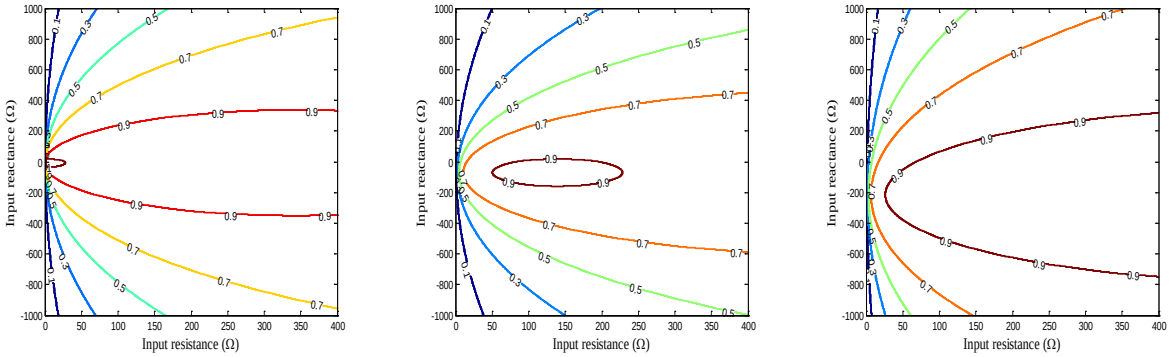

(a) (b) (c)

Fig. 13. Level curves of operating power gain at 1.8 GHz. (a) An *LC* network and single-stub tuners fabricated on (b) FR4 and (c) RO 5880, respectively.

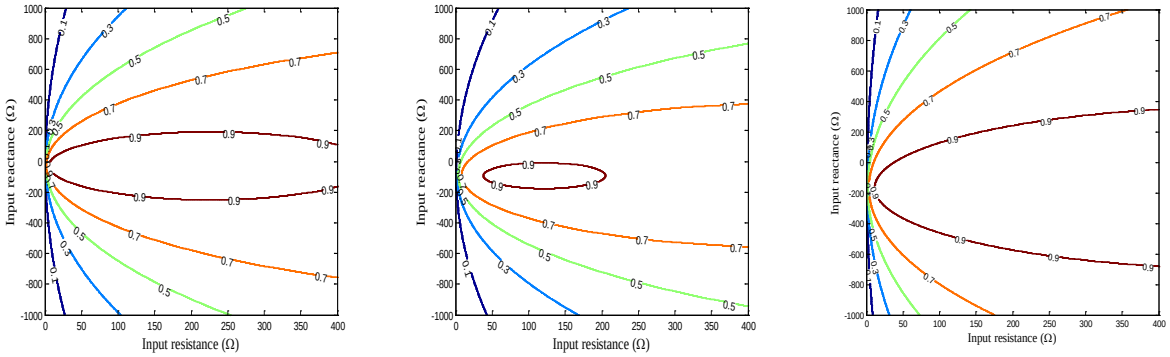

(a) (b) (c)

Fig. 14. Level curves of operating power gain at 2.4 GHz. (a) An *LC* network and single-stub tuners fabricated on (b) FR4 and (c) RO 5880, respectively.

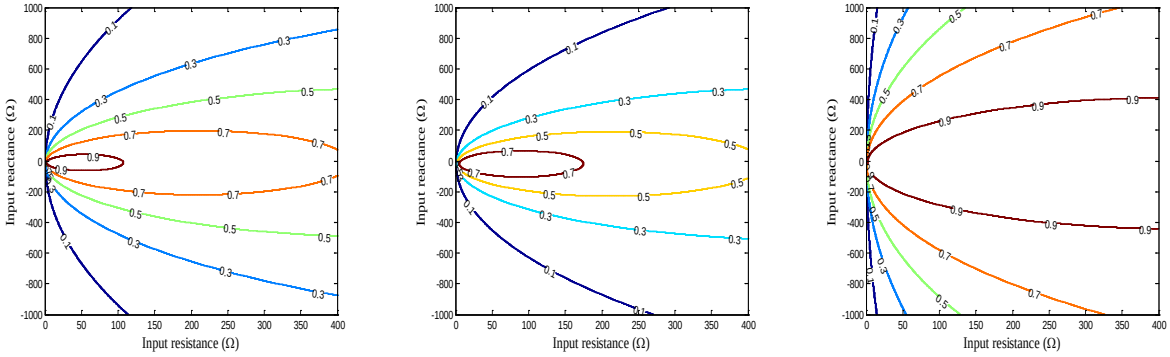

(a) (b) (c)

Fig. 15. Level curves of operating power gain at 5.8 GHz. (a) An *LC* network and single-stub tuners fabricated on (b) FR4 and (c) RO 5880, respectively.

2156-3950 (c) 2018 IEEE. Personal use is permitted, but republication/redistribution requires IEEE permission. See http://www.ieee.org/publications_standards/publications/rights/index.html for more information.

This article has been accepted for publication in a future issue of this journal, but has not been fully edited. Content may change prior to final publication. Citation information: DOI 10.1109/TCPMT.2018.2864183, IEEE Transactions on Components, Packaging and Manufacturing Technology

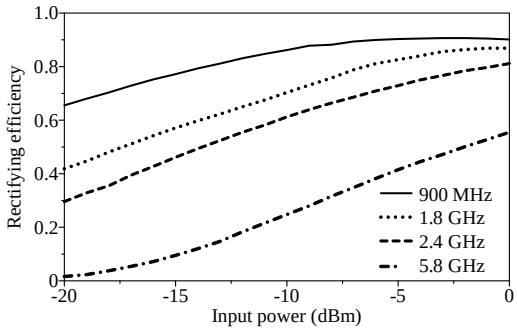

Fig. 16. Theoretical limits of rectifying efficiency at different frequencies.

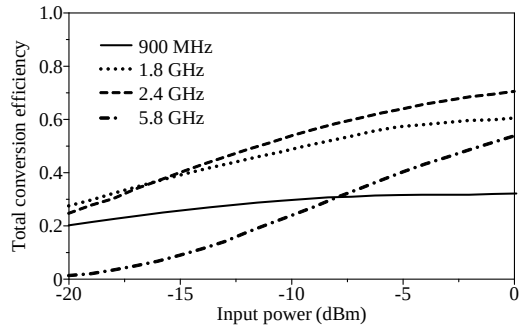

Fig. 17. Overall conversion efficiency of energy-harvesting circuits including a matching network.

on R_L and C_L with ranges 1 kΩ ≤ R_L ≤ 2000 kΩ and 1 pF ≤ C_L ≤ 100 pF. The structural analysis tool is Agilent ADS. The optimized results demonstrate that using half-wave rectifiers lead to maximum average conversion efficiency.

Afterward, the second stage is to obtain the maximum conversion efficiency for each integral input power between –20 dBm and 0 dBm. This result clarifies the maximum achievable performance of a rectifier. The corresponding results, which use half-wave rectifiers as the rectifier topology, are shown in Fig. 16. This figure shows that designing the rectifier designed at 900 MHz has higher rectifying efficiency than the rectifier at 5.8 GHz. However, these results have not yet included the insertion loss of the impedance matching network. In the third stage, we evaluate the overall conversion efficiency of the energy-harvesting circuit. Such an overall efficiency is computed by the multiplication of the maximum operating power gain shown in Figs. 7 to 10 and the maximum rectifying efficiency shown in Fig. 16. Fig. 17 shows the total conversion efficiency of the energy-harvesting circuit. It can be observed that using conventional matching networks degrades RF-dc efficiency severely. The additional loss of the matching circuit is particularly severe if the rectenna is operated at 900 MHz; in this case, the difference between the rectifying efficiency and the total efficiency is significant.

The case of 900-MHz conversion efficiency is further examined. The measured conversion efficiency of state-of-the-art energy-harvesting circuits [13], [24]–[29] is provided in Fig. 18. These energy-harvesting circuits are designed at 900 MHz, and they use different matching topologies to match the input impedance of a rectifier to that of an antenna. In particular, lumped elements have been used to construct a matching network [27], [24], [28], [29]. Transmission-line-based impedance matching networks have also been applied, including double-stub tuners [25], [26] and single-stub tuners [13]. For comparison, the theoretical limits of rectifying efficiency and those of total conversion efficiency are also depicted in Fig. 18. As can be seen, the total efficiency of the state-of-the-art is generally lower than our derived results. This further validates the correctness of our derivation. Thus, to get as close as possible to the theoretical limits of RF-dc conversion efficiency, not only the rectifier parameters should be optimized, but the additional loss of the matching circuit

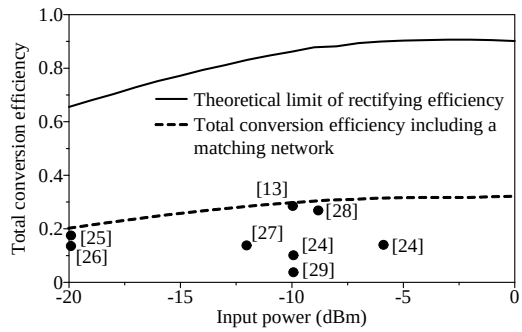

Fig. 18. The comparison between the proposed insertion loss characterization and the experimental results published in the literature.

should also be minimized. For example, by designing an antenna that has inductive impedance characteristics and is directly conjugate matched to the input impedance of the rectifier, the rectenna can eliminate the use of an external matching network. This design condition can be achieved by using regular patch antennas, quasi-Yagi antennas, or antennas that have been applied to far-field radio-frequency identification (RFID) tags [30]. As such, the insertion loss of the matching network can be removed, and the resultant overall conversion efficiency can approach the rectifying efficiency.

VI. Conclusion

In this paper, the insertion loss of the impedance matching circuit for low-power rectennas has been characterized at 900 MHz, 1.8 GHz, 2.4 GHz, and 5.8 GHz. The novelty of this work is threefold. First, for the first time the insertion loss of the matching circuit is evaluated as the function of input power, and such additional loss is quantified by performing simulation and measurement. The simulated results agree well with the measured ones, and both results point out that the insertion loss of the matching network is particularly severe for low-power regions, which range between –30 dBm and 0 dBm. Second, while the literature is used to approximating the matching network as a lossless component, we have shown that more than 95%, 90%, and 75% of power may dissipate at 900 MHz, 1.8 GHz, and 2.4 GHz, respectively, due to the use of actual matching elements. Thus, the overall conversion efficiency is more adversely affected by the matching circuit than by the rectifier design or antenna design. Third, the underlying reason

2156-3950 (c) 2018 IEEE. Personal use is permitted, but republication/redistribution requires IEEE permission. See http://www.ieee.org/publications_standards/publications/rights/index.html for more information.

This article has been accepted for publication in a future issue of this journal, but has not been fully edited. Content may change prior to final publication. Citation information: DOI 10.1109/TCPMT.2018.2864183, IEEE Transactions on Components, Packaging and Manufacturing Technology

for such high insertion loss has been clarified.

The insertion loss characterization also establishes important design rules for low-power rectenna development. If the rectenna is designed at 900 MHz or 1.8 GHz, the matching network must be eliminated from the rectenna structure, even though low-loss substrates are used. In this case, the input impedance of the antenna should be directly conjugate matched to that of the rectifier. In addition, to enhance the overall conversion efficiency of rectennas, 2.4-GHz ambient energy harvesters should prevent the use of transmission-line-based impedance tuners fabricated on FR4 or *LC* networks. It is expected that this will provide useful guidance for future low-power rectenna designers.

REFERENCES

[1] C. Song *et al.*, "Matching network elimination in broadband rectennas for high-efficiency wireless power transfer and energy harvesting," *IEEE Trans. Ind. Electron*., vol. 64, no. 5, pp. 3950–3961, May 2017.

[2] C. Song *et al.*, "A novel six-band dual CP rectenna using improved impedance matching technique for ambient RF energy harvesting," *IEEE Trans. Antennas Propag*., vol. 64, no. 7, pp. 3160–3171, July 2016.

[3] H. Sun and W. Geyi, "A new rectenna with all-polarization-receiving capability for wireless power transmission," *IEEE Antennas Wireless Propag. Lett*., vol. 15, pp. 814–817, 2016.

[4] F. Fezai, C. Menudier, M. Thevenot, T. Monediere, and N. Chevalier, "Multidirectional receiving system for RF to dc conversion signal: Application to home automation devices," *IEEE Antennas Propag. Mag*., vol. 58, no. 3, pp. 22–30, June 2016.

[5] Y.-S. Chen and C.-W. Chiu, "Maximum achievable power conversion efficiency obtained through an optimized rectenna structure for RF energy harvesting," *IEEE Trans. Antennas Propag.*, vol. 65, no. 5, pp. 2305–2317, May 2017.

[6] H. Sun, "An enhanced rectenna using differentially-fed rectifier for wireless power transmission," *IEEE Antennas Wireless Propag. Lett*., vol. 15, pp. 32–35, 2016.

[7] B. Clerckx and E. Bayguzina, "Waveform design for wireless power transfer," *IEEE Trans. Signal Process*., vol. 64, no. 23, pp. 6313–6328, Dec. 2016.

[8] A. Kaur, X. Yang, and P. Chahal, "CNTs and graphene-based diodes for microwave and millimeter-wave circuits on flexible substrates," *IEEE Trans. Compon. Packag. Manuf. Technol*., vol. 6, no. 12, pp. 1766–1775, Dec. 2016.

[9] J. Song, S. Park, S. Kim, J. J. Kim, and J. Kim, "Active silicon interposer design for interposer-level wireless power transfer technology for high-density 2.5-D and 3-D ICs," *IEEE Trans. Compon. Packag. Manuf. Technol*., vol. 6, no. 8, pp. 1148–1161, Aug. 2016.

[10] C. Song, Y. Huang, J. Zhou, and P. Carter, "Improved ultrawideband rectennas using hybrid resistance compression technique," *IEEE Trans. Antennas Propag.*, vol. 65, no. 4, pp. 2057–2062, Apr. 2017.

[11] P. Lu, X.-S. Yang, J.-L. Li, and B.-Z. Wang, "Polarization reconfigurable broadband rectenna with tunable matching network for microwave power transmission," *IEEE Trans. Antennas Propag.*, vol. 64, no. 3, pp. 1136–1141, Mar. 2016.

[12] S. D. Assimonis, S.-N. Daskalakis, and A. Bletsas, "Sensitive and efficient RF harvesting supply for batteryless backscatter sensor networks," *IEEE Trans. Microw. Theory Techn*., vol. 64, no. 4, pp. 1327–1338, Apr. 2016.

[13] D. Masotti, A. Costanzo, P. Francia, M. Filippi, and A. Romani, "A load-modulated rectifier for RF micropower harvesting with start-up strategies," *IEEE Trans. Microw. Theory Techn*., vol. 62, no. 4, pp. 994–1004, Apr. 2014.

[14] R. Scheeler, S. Korhummel, and Z. Popovic, "A dual-frequency ultralowpower efficient 0.5-g rectenna," *IEEE Microw. Mag*., vol. 15, no. 1, pp. 109–114, Jan./Feb. 2014.

[15] E. Gilbert, "Impedance matching with lossy components," *IEEE Trans. Circuits Syst.*, vol. 22, no. 2, pp. 96–100, Feb. 1975.

[16] C. R. Chappidi and K. Sengupta, "Methods for finding globally maximum-efficiency impedance matching networks with lossy passives," *IEEE Custom Integrated Circuits Conference (CICC)*, San Jose, CA, Sept. 2015, pp. 1–4.

[17] L. J. Ricardi, "The insertion loss of transmission lines used in matching networks," *IEEE Trans. Microw. Theory Techn*., vol. 16, no. 3, pp. 189–191, Mar. 1968.

[18] J. C. Allen, D. Arceo, and P. Hansen, "Optimal lossy matching by Pareto fronts," *IEEE Trans. Circuits Syst. II: Exp. Briefs*, vol. 55, no. 6, pp. 497–501, June 2008.

[19] C. H. P. Lorenz, S. Hemour, and K. Wu, "Modeling and influence of matching network insertion losses on ambient microwave power harvester," in *Proc. IEEE MTT-S Int. Conf. Numer. Electromagn. Multiphys. Modeling Optim*., Ottawa, ON, Canada, Aug. 2015, pp. 1–3.

[20] C. Valenta and G. Durgin, "Harvesting wireless power: Survey of energy-harvester conversion efficiency in far-field, wireless power transfer systems," *IEEE Microw. Mag*., vol. 15, no. 4, pp. 108–120, June 2014.

[21] D. M. Pozar, *Microwave Engineering*. 3rd ed., New York: Wiley, 2005.

[22] M. Arrawatia, M. S. Baghini, and G. Kumar, "Broadband bent triangular omnidirectional antenna for RF energy harvesting," *IEEE Antennas Wireless Propag. Lett*., vol. 15, pp. 36–39, 2016.

[23] V. Kuhn, C. Lahuec, F. Seguin, and C. Person, "A multi-band stacked RF energy harvester with RF-to-DC efficiency up to 84%," *IEEE Trans. Microw. Theory Tech*., vol. 63, no. 5, pp. 1768–1778, May 2015.

[24] P. Nintanavongsa, U. Muncuk, D. R. Lewis, and K. R. Chowdhury, "Design optimization and implementation for RF energy harvesting circuits," *IEEE J. Emerg. Select. Topics Circuits Syst*., vol. 2, no. 1, pp. 24–33, Mar. 2012.

[25] A. Boaventura, A. Collado, and N. B. Carvalho, "Optimum behavior: Wireless power transmission system design through behavioral models and efficient synthesis techniques," *IEEE Microw. Mag*., vol. 14, no. 2, pp. 26–35, Mar. 2013.

[26] A. Collado and A. Georgiadis, "Conformal hybrid solar and electromagnetic (EM) energy harvesting rectenna," *IEEE Trans. Circuits Syst. I, Reg. Papers*, vol. 60, no. 8, pp. 2225–2234, Aug. 2013.

[27] M. Piñuela, P. D. Mitcheson, and S. Lucyszyn, "Ambient RF energy harvesting in urban and semi-urban environments," *IEEE Trans. Microw. Theory Techn*., vol. 61, no. 7, pp. 2715–2726, July 2013.

[28] B. L. Pham and A.-V. Pham, "Triple bands antenna and high efficiency rectifier design for RF energy harvesting at 900, 1900, and 2400 MHz," *Proc. IEEE MTT-S Int. Microw. Symp*, Seattle, WA, June 2013, pp. 1–3.

[29] D. Pavone, A. Buonanno, M. D'Urso, and F. G. Corte, "Design considerations for radio frequency energy harvesting devices," *Progr. Electromagn. Res*., vol. 45, pp. 19–35, 2012.

[30] F.-L. Bong, E.-H. Lim, and F.-L. Lo, "Compact folded dipole with embedded matching loop for universal tag applications," *IEEE Trans. Antennas Propag*., vol. 65, no. 5, pp. 2173–2181, May 2017.

2156-3950 (c) 2018 IEEE. Personal use is permitted, but republication/redistribution requires IEEE permission. See http://www.ieee.org/publications_standards/publications/rights/index.html for more information.

This article has been accepted for publication in a future issue of this journal, but has not been fully edited. Content may change prior to final publication. Citation information: DOI 10.1109/TCPMT.2018.2864183, IEEE Transactions on Components, Packaging and Manufacturing Technology

Yen-Sheng Chen (M'13) was born in Taichung, Taiwan, in 1985. He received the B.S. degree in electrical engineering and the M.S. and Ph.D. degrees in communication engineering from National Taiwan University, Taipei, Taiwan, in 2007, 2009, and 2012, respectively.

Since 2013, he has been a Faculty Member with the Department of Electronic Engineering, National Taipei University of Technology, Taipei, where he is currently an Associate Professor. He has participated in a wide range of research projects, including chipless RFID, wireless power transfer, antenna array failure correction, antennas for body centric communications, multiple-input multiple-output antennas for compact base stations, microwave reconfigurable devices, and multiobjective optimization techniques. His recent research focus includes chipless sensor networks, RF energy harvesting, antenna arrays, and engineering data analysis/mining. He has served on the editorial/review boards of many technical journals, transactions, proceedings, and letters. He received Outstanding Reviewers Awards from the IEEE ANTENNAS AND WIRELESS PROPAGATION LETTERS in 2017 and 2018, respectively. He received an Outstanding Research Award from the College of Electrical Engineering and Computer Science, National Taipei University of Technology, in 2018.

Cheng-Wei Chiu was born in New Taipei City, Taiwan, in 1991. He received the B.S. and M.S. degrees in electronic engineering from the National Taipei University of Technology, in 2014 and 2016, respectively.

In 2016, he joined ASUSTeK Computer Inc. as an RF Design Engineer. His current research interests include RF energy harvesting, antennas, wireless communication, and power management.

2156-3950 (c) 2018 IEEE. Personal use is permitted, but republication/redistribution requires IEEE permission. See http://www.ieee.org/publications_standards/publications/rights/index.html for more information.