E	m_2	M_1	q_4	q_3	q_2	q_1	Q_4	Q_3	Q_2	Q_1	J_4	J_3	J_2	J_1	K_4	K_3	K_2	K_1
0	x	x	x	x	x	x	0	0	0	0	0	0	0	0	0	0	0	0
1	0	0	0	0	0	1	1	1	1	1	1	1	1	x	x	x	x	x
1	0	0	0	0	1	0	1	1	1	0	1	1	x	x	x	x	0	x
1	0	0	0	0	1	1	1	1	1	1	1	1	x	x	x	0	x	x
1	0	0	0	1	0	0	1	1	0	0	1	x	0	x	x	x	x	x
1	0	0	0	1	0	1	1	1	0	1	1	x	0	x	x	x	x	x
1	0	0	0	1	1	0	1	1	1	0	1	x	x	0	x	x	x	x
1	0	0	0	1	1	1	1	1	1	1	1	x	x	x	x	x	x	x
1	0	0	1	0	0	0	1	0	0	0	x	x	x	x	1	x	x	x
1	0	0	1	0	0	1	1	0	0	1	x	x	x	x	1	x	x	x
1	0	0	1	0	1	0	1	0	1	0	x	x	x	x	1	x	x	x
1	0	0	1	0	1	1	1	0	1	1	x	x	x	x	1	x	x	x
1	0	0	1	1	0	0	1	0	0	0	x	x	x	x	1	x	x	x
1	0	0	1	1	0	1	1	0	0	1	x	x	x	x	1	x	x	x
1	0	0	1	1	1	0	1	0	1	0	x	x	x	x	1	x	x	x
1	0	0	1	1	1	1	1	0	1	1	x	x	x	x	1	x	x	x

$J_4 = q_3 + q_1 + q_2$

q_4q_3 \ q_2q_1	00	01	11	10
00	0 (0)	1 (1)	1 (3)	1 (2)
01	1 (4)	1 (5)	1 (7)	1 (6)
11	x (12)	x (13)	x (15)	x (14)
10	x (8)	x (9)	x (11)	x (10)

$J_3 = q_2 + q_1$

q_4q_3 \ q_2q_1	00	01	11	10
00	0 (0)	1 (1)	1 (3)	1 (2)
01	x (4)	x (5)	x (7)	x (6)
11	x (12)	x (13)	x (15)	x (14)
10	0 (8)	1 (9)	1 (11)	1 (10)

$J_2 = q_1$

q_4q_3 \ q_2q_1	00	01	11	10
00	0 (0)	1 (1)	x (3)	x (2)
01	0 (4)	1 (5)	x (7)	x (6)
11	x (12)	x (13)	x (15)	x (14)
10	x (8)	x (9)	x (11)	x (10)

$J_1 = 0$

q_4q_3 \ q_2q_1	00	01	11	10
00	0 (0)	x (1)	x (3)	0 (2)
01	0 (4)	x (5)	x (7)	0 (6)
11	x (12)	x (13)	x (15)	x (14)
10	0 (8)	x (9)	x (11)	0 (10)

11	0 12	1 13	X 15	X 14
10	0 8	1 9	X 11	X 10

11	0 12	X 13	X 15	0 14
10	0 8	X 9	X 11	0 10

$k_4 = q_2 + q_1 + q_3$

q_4q_3 \ q_2q_1	00	01	11	10
00	X 0	X 1	X 3	X 2
01	X 4	X 5	X 7	X 6
11	1 12	1 13	1 15	1 14
10	0 8	1 9	1 11	1 10

$k_3 = q_2 + q_1$

q_4q_3 \ q_2q_1	00	01	11	10
00	X 0	X 1	X 3	X 2
01	0 4	1 5	1 7	1 6
11	0 12	1 13	1 15	1 14
10	X 8	X 9	X 11	X 10

$k_2 = q_1$

q_4q_3 \ q_2q_1	00	01	11	10
00	X 0	X 1	1 3	0 2
01	X 4	X 5	1 7	0 6
11	X 12	X 13	1 15	0 14
10	X 8	X 9	1 11	0 10

$k_1 = 0$

q_4q_3 \ q_2q_1	00	01	11	10
00	X 0	0 1	0 3	X 2
01	X 4	0 5	0 7	X 6
11	X 12	0 13	0 15	X 14
10	X 8	0 9	0 11	X 10

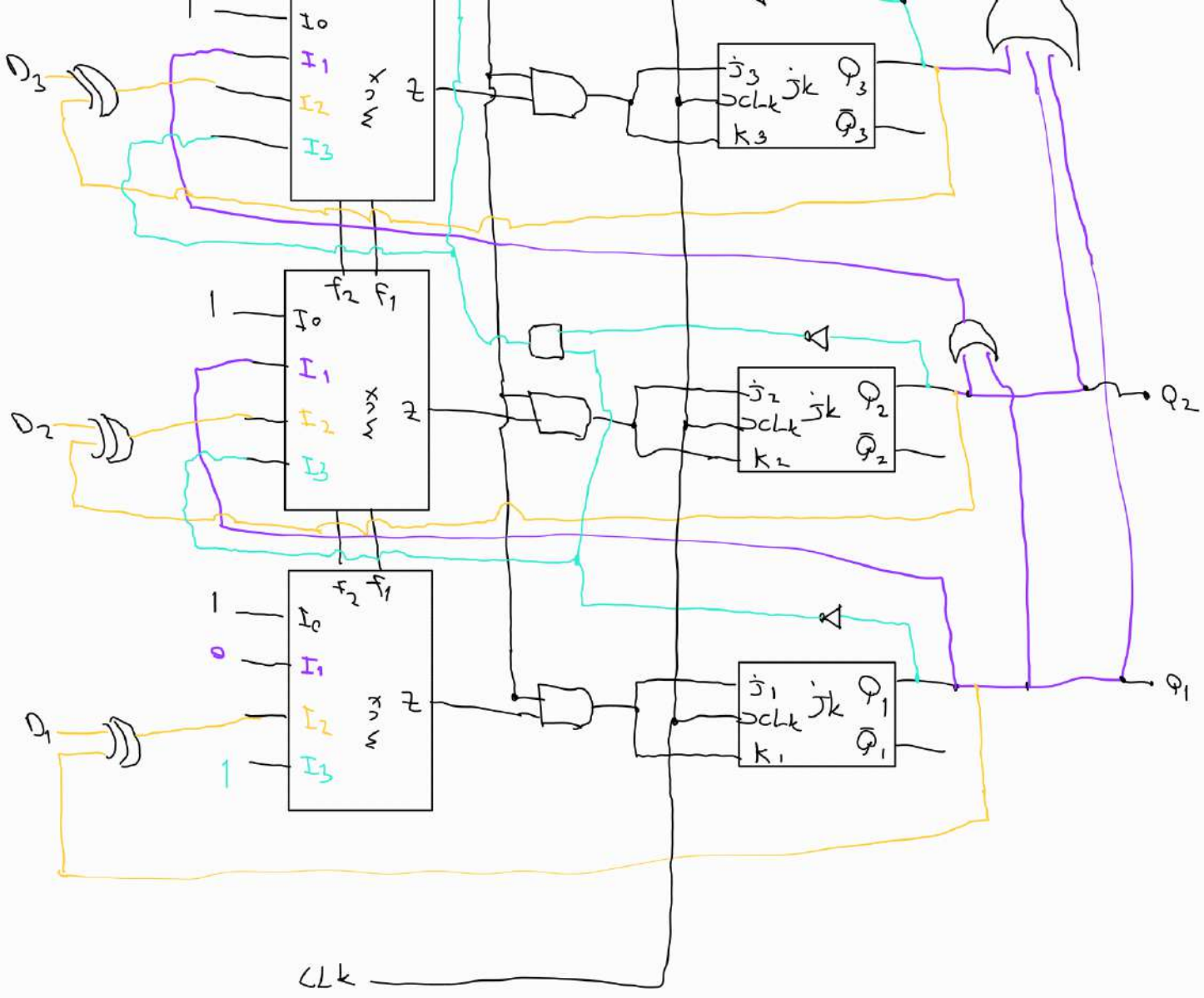

D3
D2
D1
I0
I1
I2
I3
MUX
Z
f2 f1
1
0
J3
CLK
K3
jk
Q3
Q̄3
J2
K2
Q2
Q̄2
J1
K1
Q1
Q̄1
Q2
Q1
CLK

Soru 2:

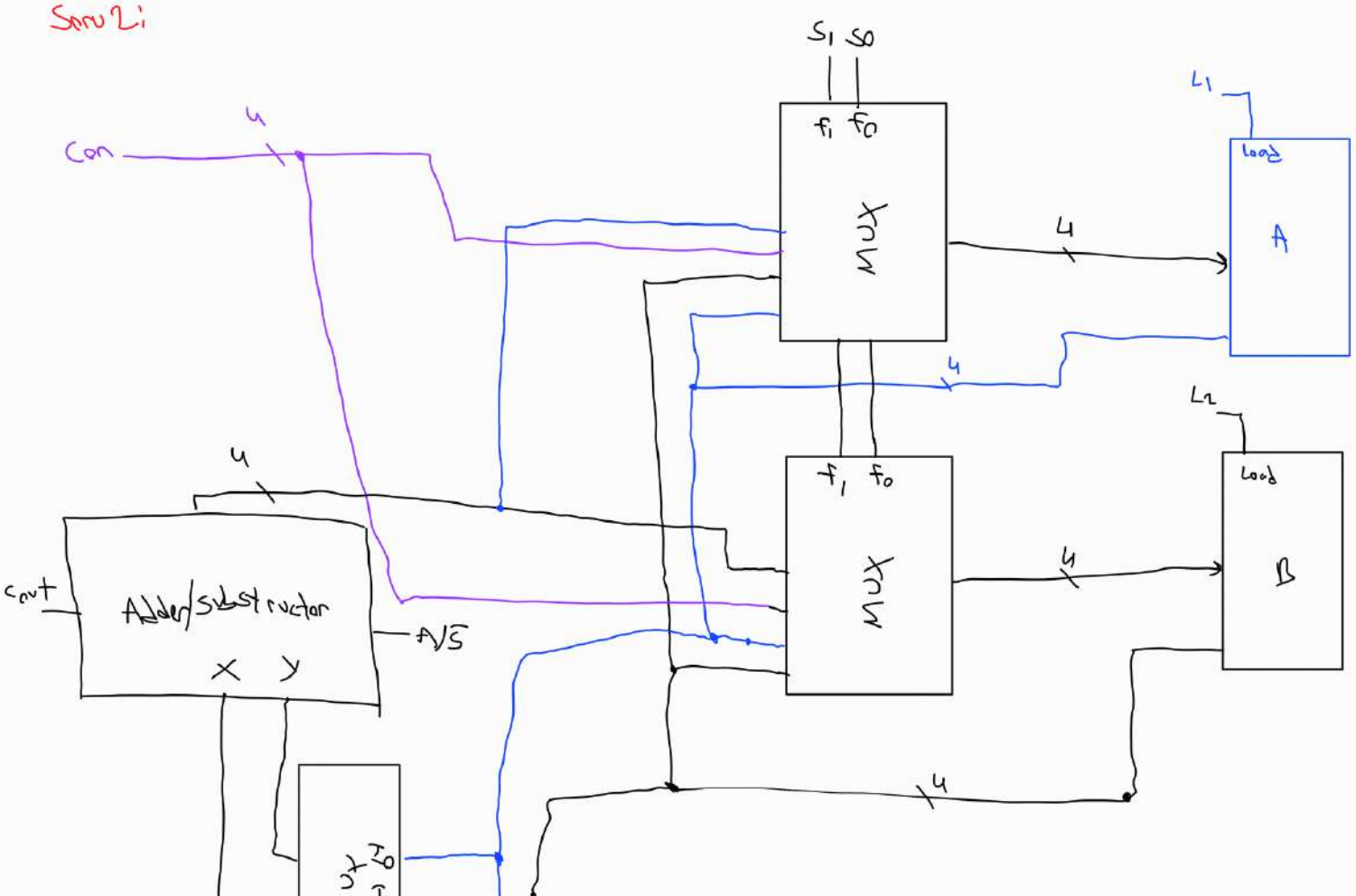

S1 S0
f1 f0
MUX
4
Con
L1
Load
A
L2
Load
B
Cout
Adder/substructor
X Y
A/S
I0

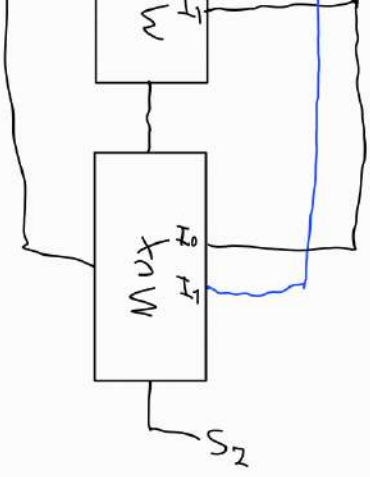
MUX
I_0
I_1
S_2