# Chapter – 4
# Deadlock

# Topics to be covered

- Definitions
- Deadlock characteristics
- Deadlock ignorance
  - Ostrich Algorithm
- Deadlock detection and recovery
- Deadlock avoidance
  - Banker’s algorithm
- Deadlock prevention

# What is Deadlock?

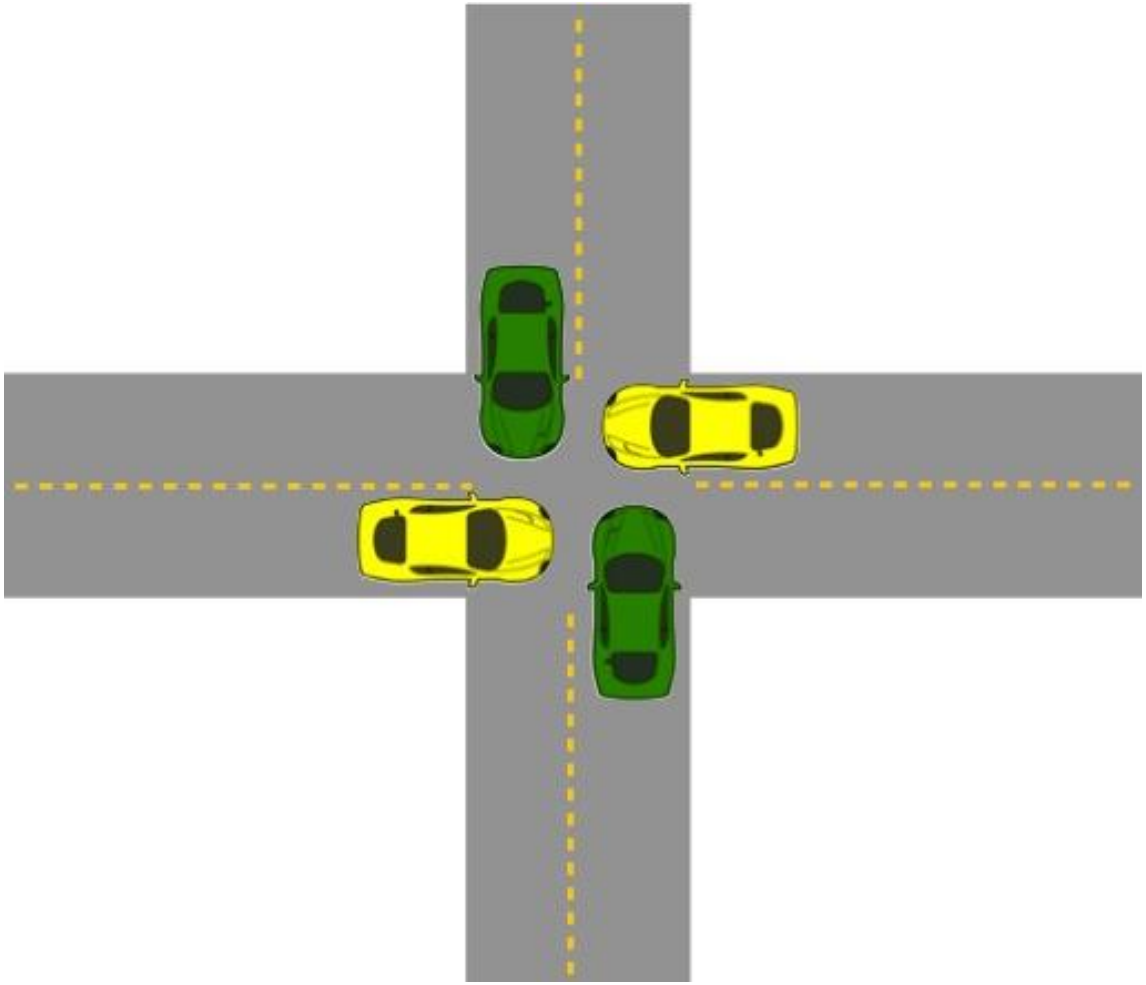

# What is Deadlock?

- A set of processes is deadlocked **if each process in the set is waiting for an event** that **only another process in the set can cause**.
- Deadlocks are a **set of blocked processes** each **holding a resource and waiting to acquire a resource held by another process**.

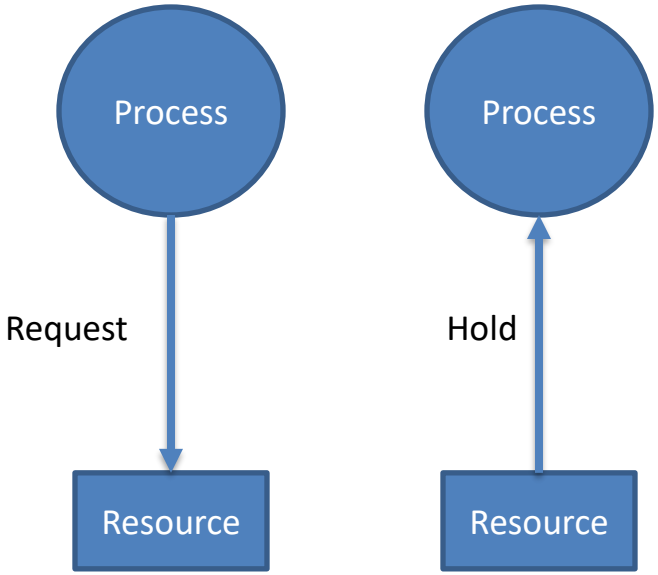


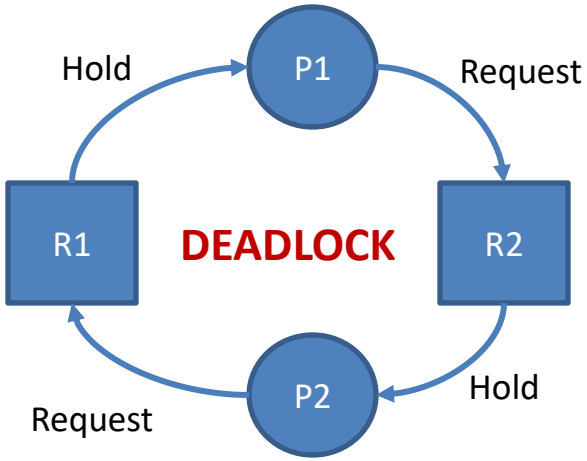

# What is Deadlock?

- Process 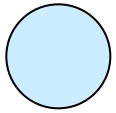
- Resource Type with 4 instances 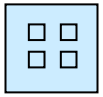
- $P_i$ requests instance of $R_j$ 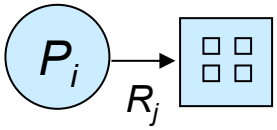

- $P_i$ is holding an instance of $R_j$ 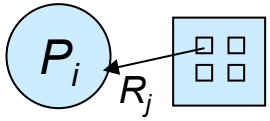

# Resource Allocation Graph With A Deadlock

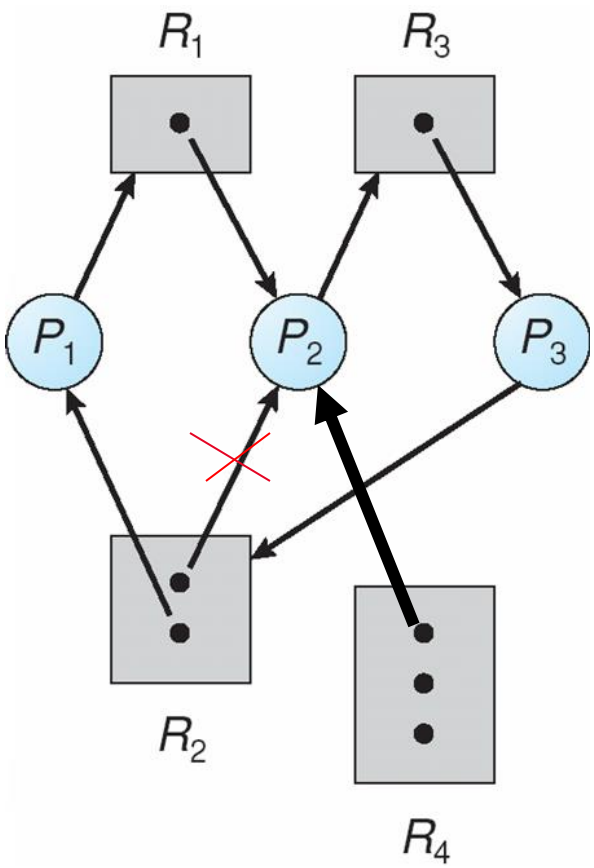

# Graph With A Cycle But No Deadlock

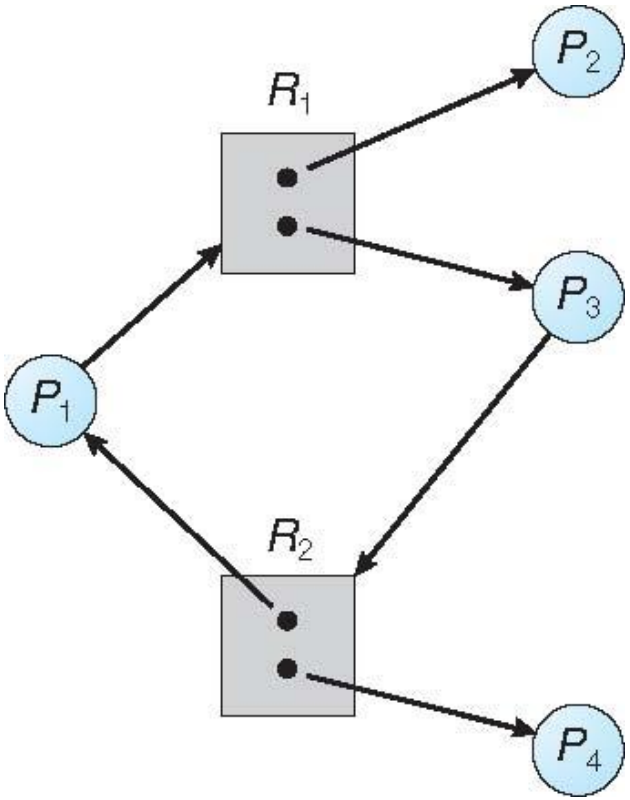

# Preemptable and non-preemptable resource

- **Preemptable**:- Preemptive resources are those which **can be taken away from a process without causing any ill effects** to the process.
  - Example:- Memory.
- **Non-preemptable**:- Non-pre-emptive resources are those which **cannot be taken away from the process without causing any ill effects** to the process.
  - Example:- CD-ROM (CD recorder), Printer.

# Deadlock v/s Starvation

| Deadlock | Starvation |
|---|---|
| All processes keep waiting for each other to complete and none get executed. | High priority process keep executing and low priority process are blocked. |
| Resources are blocked by the process. | Resources are continuously utilized by the higher priority process. |
| Necessary conditions are mutual exclusion, hold and wait, no preemption, circular wait. | Priorities are assigned to the process. |
| Also known as circular wait. | Also known as lived lock. |
| It can be prevented by avoiding the necessary conditions for deadlock. | It can be prevented by Aging. |

# Conditions that lead to deadlock

1. Mutual exclusion
   - Each resource is either currently **assigned to exactly one process or is available**.
2. Hold and wait
   - Process currently holding resources granted earlier can **request more resources**.
3. No preemption
   - Previously granted resources **cannot be forcibly taken away** from process.
4. Circular wait
   - There must be a **circular chain of 2 or more processes**. Each process is waiting for resource that is held by next member of the chain.

- **All four of these conditions must be present for a deadlock to occur.**

# Strategies for dealing with deadlock

1. Just **ignore** the problem.
   - **Detection** and **recovery -** Let deadlocks occur, detect them and act.
2. Dynamic **avoidance** by careful resource allocation.
3. **Prevention**, by structurally negating (killing) one of the four required conditions.

# Deadlock ignorance (Ostrich Algorithm)

- When storm approaches, an ostrich puts his head in the sand (ground) and pretend (imagine) that there is no problem at all.
- **Ignore** the **deadlock** and **pretend** that **deadlock never occur**.
- Reasonable if
  - deadlocks **occur very rarely**
  - **difficult to detect**
  - **cost** of prevention is **high**
- UNIX and Windows take this approach

# Deadlock detection for single resource (RAG)

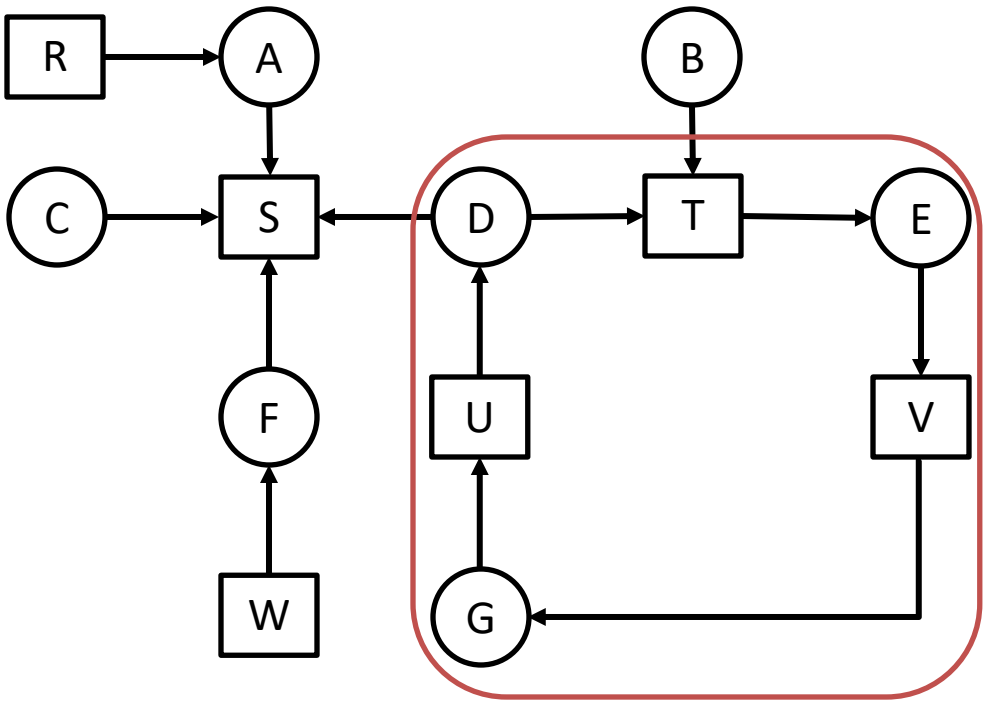


- We are starting from node D.
- Empty list L = ()
- Add current node so Empty list = (D).
- From this node there is one outgoing arc to T so add T to list.
- So, list become L = (D, T).
- Continue this step….so we get list as below
- L = (D, T, E)…….. L = (**D**, T, E, V, G, U, **D**)
- In the above step in list the node **D appears twice**, so deadlock.

# Deadlock detection for single resource

- Algorithm for detecting deadlock for single resource
  1. For each node, N in the graph, perform the following five steps with N as the starting node.
     i. Initialize L to the empty list, designate all arcs as unmarked.
     ii. Add current node to end of L, check to see if node now appears in L two times. If it does, graph contains a cycle (listed in L), algorithm terminates.
     iii. From given node, see if any unmarked outgoing arcs. If so, go to step 4; if not, go to step 5.
     iv. Pick an unmarked outgoing arc at random and mark it. Then follow it to the new current node and go to step 2.
     v. If this is initial node, graph does not contain any cycles, algorithm terminates. Otherwise, dead end. Remove it, go back to previous node, make that one current node, go to step 2.

# Deadlock detection for multiple resource

E =

| Tape Drive | Plotters | Scanners | CD Roms |
|---|---|---|---|
| 4 | 2 | 3 | 1 |

total no of each resource

A =

| Tape Drive | Plotters | Scanners | CD Roms |
|---|---|---|---|
| 2 | 1 | 0 | 0 |

no of resources that are available (free)

C =

| Process | Tape Drive | Plotters | Scanners | CD Roms |
|---|---|---|---|---|
| P1 | 0 | 0 | 1 | 0 |
| P2 | 2 | 0 | 0 | 1 |
| P3 | 0 | 1 | 2 | 0 |

no of resources held by each process

R =

| Process | Tape Drive | Plotters | Scanners | CD Roms |
|---|---|---|---|---|
| P1 | 2 | 0 | 0 | 1 |
| P2 | 1 | 0 | 1 | 1 |
| P3 | 2 | 1 | 0 | 0 |

no of resources still needed by each process to proceed

# Deadlock detection for multiple resource

E =

| Tape Drive | Plotters | Scanners | CD Roms |
|---|---|---|---|
| 4 | 2 | 3 | 1 |

total no of each resource

A =

| Tape Drive | Plotters | Scanners | CD Roms |
|---|---|---|---|
| 0 | 0 | 0 | 0 |

no of resources that are available (free)

C =

| Process | Tape Drive | Plotters | Scanners | CD Roms |
|---|---|---|---|---|
| P1 | 0 | 0 | 1 | 0 |
| P2 | 2 | 0 | 0 | 1 |
| P3 | 2 | 2 | 2 | 0 |

no of resources held by each process

R =

| Process | Tape Drive | Plotters | Scanners | CD Roms |
|---|---|---|---|---|
| P1 | 2 | 0 | 0 | 1 |
| P2 | 1 | 0 | 1 | 1 |
| P3 | 0 | 0 | 0 | 0 |

no of resources still needed by each process to proceed

# Deadlock detection for multiple resource

E =

| Tape Drive | Plotters | Scanners | CD Roms |
|---|---|---|---|
| 4 | 2 | 3 | 1 |

total no of each resource

A =

| Tape Drive | Plotters | Scanners | CD Roms |
|---|---|---|---|
| 2 | 2 | 2 | 0 |

no of resources that are available (free)

C =

| Process | Tape Drive | Plotters | Scanners | CD Roms |
|---|---|---|---|---|
| P1 | 0 | 0 | 1 | 0 |
| P2 | 2 | 0 | 0 | 1 |
| ~~P3~~ | ~~0~~ | ~~0~~ | ~~0~~ | ~~0~~ |

no of resources held by each process

R =

| Process | Tape Drive | Plotters | Scanners | CD Roms |
|---|---|---|---|---|
| P1 | 2 | 0 | 0 | 1 |
| P2 | 1 | 0 | 1 | 1 |
| ~~P3~~ | ~~0~~ | ~~0~~ | ~~0~~ | ~~0~~ |

DEADLOCK

no of resources still needed by each process to proceed

# Example

- Five processes $P_0$ through $P_4$; three resource types A (7 instances), *B* (2 instances), and *C* (6 instances)

- Snapshot at time $T_0$:

| | *Allocation* | *Request* | *Available* |
|---|---|---|---|
| | *A B C* | *A B C* | *A B C* |
| $P_0$ | 0 1 0 | 0 0 0 | 0 0 0 |
| $P_1$ | 2 0 0 | 2 0 2 | |
| $P_2$ | 3 0 3 | 0 0 0 | |
| $P_3$ | 2 1 1 | 1 0 0 | |
| $P_4$ | 0 0 2 | 0 0 2 | |

- Sequence <$P_0$, $P_2$, $P_3$, $P_4$, $P_1$> will result in ***Finish[i] = true*** for all ***i***

# Example (Conti..)

- $P_2$ requests an additional instance of type $C$

| | *Request* |
|---|---|
| | *A B C* |
| $P_0$ | 0 0 0 |
| $P_1$ | 2 0 2 |
| $P_2$ | 0 0 1 |
| $P_3$ | 1 0 0 |
| $P_4$ | 0 0 2 |

- State of system?
  - Can reclaim resources held by process $P_0$, but insufficient resources to fulfill other processes; requests
  - Deadlock exists, consisting of processes $P_1$, $P_2$, $P_3$, and $P_4$

# Detection Algorithm

- **Available***:* A vector of length ***m*** indicates the number of available resources of each type

- **Allocation***:* An ***n*** **x** ***m*** matrix defines the number of resources of each type currently allocated to each process

- **Request***:* An ***n*** **x** ***m*** matrix indicates the current request of each process. If ***Request*** **[*n*][*m*] = *k***, then process $P_n$ is requesting ***k*** more instances of resource type $R_m$.

# Detection Algorithm

1. Let ***Free*** and ***Finish*** be vectors of length ***m*** and ***n***, respectively Initialize:
   (a) ***Free* = *Available***
   (b) For ***i* = 1,2, …, *n***, if $\boldsymbol{Allocation_i \neq 0}$, then
   ***Finish*[i] = *false***; otherwise, ***Finish*[i] = *true***

2. Find an index ***i*** such that both:
   (a) ***Finish*[*i*] == *false***
   (b) $\boldsymbol{Request_i \leq Free}$
   If no such ***i*** exists, go to step 4

3. $\boldsymbol{Free = Free + Allocation_i}$
   ***Finish*[*i*] = *true***
   go to step 2

4. If ***Finish[i] == false***, for some ***i***, $1 \leq i \leq n$, then the system is in deadlock state

# Detection – Algorithm Usage

- When, and how often, to invoke depends on:
  - How often a deadlock is likely to occur?
  - How many processes will need to be rolled back?
    - one for each disjoint cycle

- If detection algorithm is invoked arbitrarily, there may be many cycles in the resource graph and so we would not be able to tell which of the many deadlocked processes "caused" the deadlock.

# Deadlock recovery

1. Recovery through pre-emption
   - In this method **resources are temporarily taken away** from its current owner and give it to another process.
   - The **ability to take a resource away from a process**, have **another process use it**, and then **give it back without the process** noticing it is highly **dependent on the nature of the resource**.
   - Recovering this way is frequently difficult or impossible.

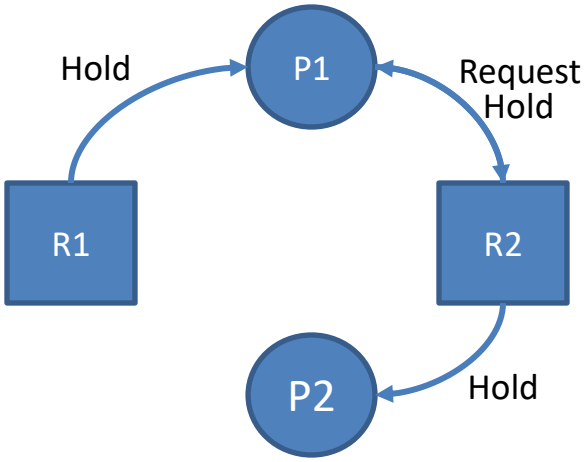

# Deadlock recovery (cont…)

2. Recovery through rollback
   - **PCB (Process Control Block)** and **resource state** are **periodically saved at "checkpoint"**.
   - When **deadlock is detected**, **rollback the preempted process up to the previous safe state** before it acquired that resource.
   - **Discard the resource manipulation** that occurred after that checkpoint.
   - Start the process after it is determined it can run again.

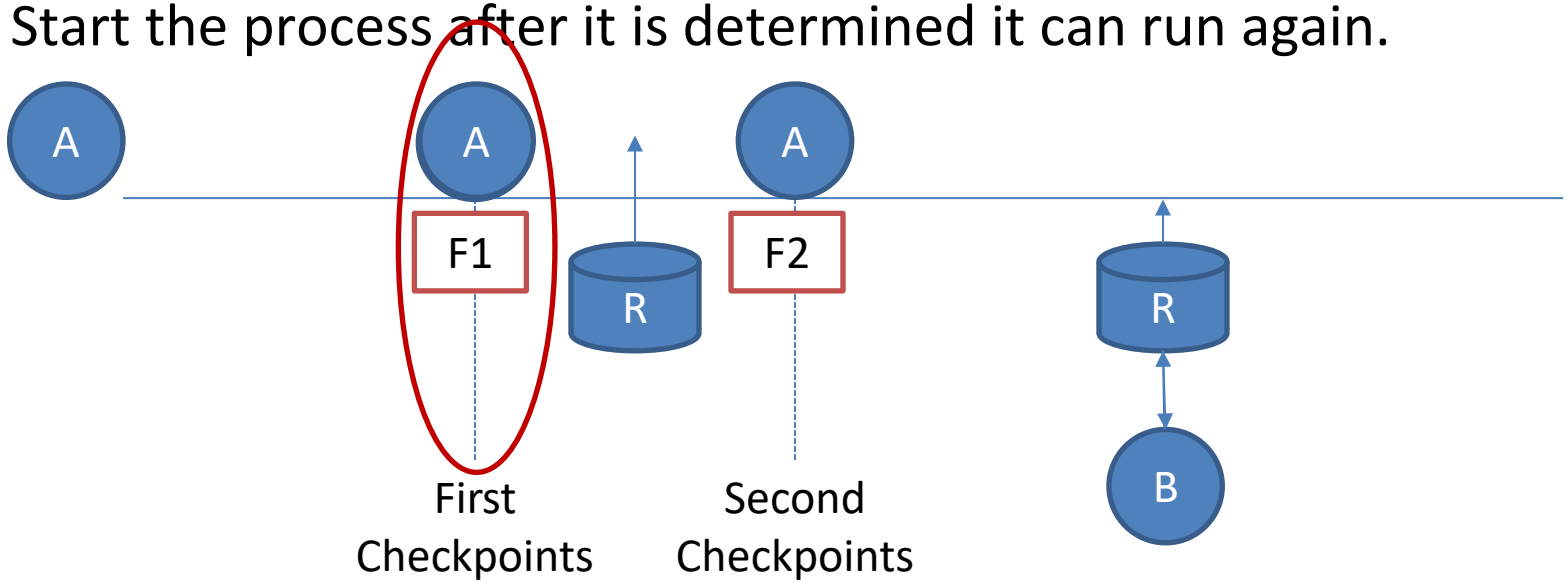

# Deadlock recovery (cont…)

3. Recovery through killing processes
   - The simplest way to break a deadlock is to **kill one or more processes**.
     - Kill all the process involved in deadlock
     - Kill process one by one.
       - After killing each process check for deadlock
         - » If deadlock recovered, then stop killing more process
         - » Otherwise kill another process

# Recovery from Deadlock (Process Termination)

- Abort all deadlocked processes
- Abort one process at a time until the deadlock cycle is eliminated
- In which order should we choose to abort?
  1. Priority of the process
  2. How long process has computed, and how much longer to completion
  3. Resources the process has used
  4. Resources process needs to complete
  5. How many processes will need to be terminated
  6. Is process interactive or batch?

# Deadlock recovery (cont…)

- **Selecting a victim** – minimize cost
- **Rollback** – return to some safe state, restart process for that state
- **Starvation** – same process may always be picked as victim, include number of rollback in cost factor

# Safe and unsafe states

- A state is said to be safe if it is not deadlocked and there is some scheduling order in which **every process can run to completion even if all of them suddenly request** their maximum number of resources immediately.
- Total resources are 10
- 7 resources already allocated
- So there are 3 still free
- A need 6 resources more to complete it.
- B need 2 resources more to complete it.
- C need 5 resources more to complete it.

| Process | Has | Max |
|---|---|---|
| A | 3 | 9 |
| B | 2 | 4 |
| C | 2 | 7 |
| Free : 3 | | |

# Safe, Unsafe and Deadlock State

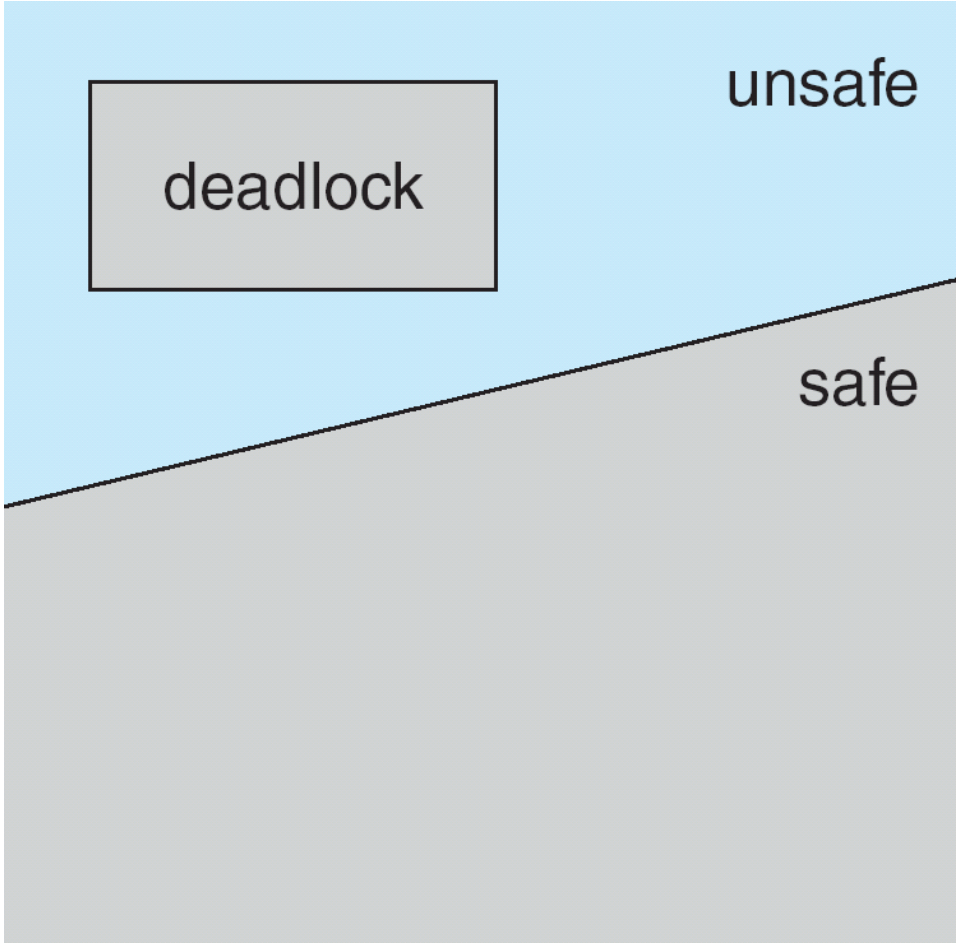

# Safe states

| Process | Has | Max |
|---|---|---|
| A | 3 | 9 |
| B | 2 | 4 |
| C | 2 | 7 |
| Free : 3 | | |

2

| Process | Has | Max |
|---|---|---|
| A | 3 | 9 |
| B | 4 | 4 |
| C | 2 | 7 |
| Free : 1 | | |

4

| Process | Has | Max |
|---|---|---|
| A | 3 | 9 |
| B | 0 | - |
| C | 2 | 7 |
| Free : 5 | | |

5

| Process | Has | Max |
|---|---|---|
| A | 3 | 9 |
| B | 0 | - |
| C | 7 | 7 |
| Free : 0 | | |

7

| Process | Has | Max |
|---|---|---|
| A | 3 | 9 |
| B | 0 | - |
| C | 0 | - |
| Free : 7 | | |

6

| Process | Has | Max |
|---|---|---|
| A | 9 | 9 |
| B | 0 | - |
| C | 0 | - |
| Free : 1 | | |

# Unsafe states

| Process | Has | Max |
|---|---|---|
| A | 3 | 9 |
| B | 2 | 4 |
| C | 2 | 7 |
| Free : 3 | | |

1

| Process | Has | Max |
|---|---|---|
| A | 4 | 9 |
| B | 2 | 4 |
| C | 2 | 7 |
| Free : 2 | | |

2

| Process | Has | Max |
|---|---|---|
| A | 4 | 9 |
| B | 4 | 4 |
| C | 2 | 7 |
| Free : 0 | | |

4

| Process | Has | Max |
|---|---|---|
| A | 4 | 9 |
| B | 0 | - |
| C | 2 | 7 |
| Free : 4 | | |

# Deadlock avoidance

- Deadlock can be avoided by **allocating resources carefully**.
- Carefully **analyse each resource** request to **see if it can be safely granted**.
- Need an algorithm that can always avoid deadlock by making right choice all the time **(Banker's algorithm).**
- Banker's algorithm for single resource
- Banker's algorithm for multiple resource

A state is said to be safe if it is not deadlocked and there is some scheduling order possible in which every process can run to completion even if all of them suddenly request their maximum number of resources immediately.

# Banker's algorithm for single resource

- What the algorithm does is check to see if granting the request leads to an unsafe state. If it does, the request is denied.
- If granting the request leads to a safe state, it is carried out.
- If we have situation as per figure
  - then it is safe state
  - because with 10 free units
  - one by one all customers can be served.

| Process | Has | Max |
|---|---|---|
| A | 0 | 6 |
| B | 0 | 5 |
| C | 0 | 4 |
| D | 0 | 7 |
| Free : 10 | | |

# Banker's algorithm for single resource

| Process | Has | Max |
|---|---|---|
| A | 1 | 6 |
| B | 1 | 5 |
| C | 2 | 4 |
| D | 4 | 7 |
| Free : 2 | | |

| Process | Has | Max |
|---|---|---|
| A | 1 | 6 |
| B | 1 | 5 |
| C | 4 | 4 |
| D | 4 | 7 |
| Free : 0 | | |

| Process | Has | Max |
|---|---|---|
| A | 1 | 6 |
| B | 1 | 5 |
| ~~C~~ | ~~0~~ | ~~0~~ |
| D | 4 | 7 |
| Free : 4 | | |

| Process | Has | Max |
|---|---|---|
| A | 1 | 6 |
| B | 1 | 5 |
| ~~C~~ | ~~0~~ | - |
| D | 7 | 7 |
| Free : 1 | | |

| Process | Has | Max |
|---|---|---|
| A | 1 | 6 |
| B | 1 | 5 |
| ~~C~~ | ~~0~~ | - |
| ~~D~~ | ~~0~~ | - |
| Free : 8 | | |

| Process | Has | Max |
|---|---|---|
| A | 1 | 6 |
| B | 5 | 5 |
| ~~C~~ | ~~0~~ | - |
| ~~D~~ | ~~0~~ | - |
| Free : 4 | | |

# Banker's algorithm for single resource

| Process | Has | Max |
|---|---|---|
| A | 1 | 6 |
| ~~B~~ | ~~0~~ | - |
| ~~C~~ | ~~0~~ | - |
| ~~D~~ | ~~0~~ | - |
| Free : 9 | | |

| Process | Has | Max |
|---|---|---|
| A | 6 | 6 |
| ~~B~~ | ~~0~~ | - |
| ~~C~~ | ~~0~~ | - |
| ~~D~~ | ~~0~~ | - |
| Free : 4 | | |

| Process | Has | Max |
|---|---|---|
| ~~A~~ | ~~0~~ | - |
| ~~B~~ | ~~0~~ | - |
| ~~C~~ | ~~0~~ | - |
| ~~D~~ | ~~0~~ | - |
| Free : 10 | | |

- The order of execution is C, D, B, A. So if we can find proper order of execution then there is no deadlock.

# Banker's algorithm for single resource

| Process | Has | Max |
|---|---|---|
| A | 1 | 6 |
| B | 2 | 5 |
| C | 2 | 4 |
| D | 4 | 7 |
| Free : 1 | | |

# Banker's algorithm for multiple resource

| Tape Drive | Plotters | Scanners | CD Roms |
|---|---|---|---|
| 6 | 3 | 4 | 2 |

total no of each resource

| Tape Drive | Plotters | Scanners | CD Roms |
|---|---|---|---|
| 5 | 3 | 2 | 2 |

resources hold

| Tape Drive | Plotters | Scanners | CD Roms |
|---|---|---|---|
| 1 | 0 | 2 | 0 |

Available (free) resources

| Process | Tape Drive | Plotters | Scanners | CD Roms |
|---|---|---|---|---|
| P1 | 3 | 0 | 1 | 1 |
| P2 | 0 | 1 | 0 | 0 |
| P3 | 1 | 1 | 1 | 0 |
| P4 | 1 | 1 | 0 | 1 |
| P5 | 0 | 0 | 0 | 0 |

no of resources held by each process

| Process | Tape Drive | Plotters | Scanners | CD Roms |
|---|---|---|---|---|
| P1 | 1 | 1 | 0 | 0 |
| P2 | 0 | 1 | 1 | 2 |
| P3 | 3 | 1 | 0 | 0 |
| P4 | 0 | 0 | 1 | 0 |
| P5 | 2 | 1 | 1 | 0 |

no of resources still needed by each process to proceed

# Banker's algorithm for multiple resource

| Tape Drive | Plotters | Scanners | CD Roms |
|---|---|---|---|
| 6 | 3 | 4 | 2 |

total no of each resource

| Tape Drive | Plotters | Scanners | CD Roms |
|---|---|---|---|
| 5 | 3 | 2 | 2 |

resources hold

| Tape Drive | Plotters | Scanners | CD Roms |
|---|---|---|---|
| 1 | 0 | 1 | 0 |

Available (free) resources

| Process | Tape Drive | Plotters | Scanners | CD Roms |
|---|---|---|---|---|
| P1 | 3 | 0 | 1 | 1 |
| P2 | 0 | 1 | 0 | 0 |
| P3 | 1 | 1 | 1 | 0 |
| P4 | 1 | 1 | 1 | 1 |
| P5 | 0 | 0 | 0 | 0 |

no of resources held by each process

| Process | Tape Drive | Plotters | Scanners | CD Roms |
|---|---|---|---|---|
| P1 | 1 | 1 | 0 | 0 |
| P2 | 0 | 1 | 1 | 2 |
| P3 | 3 | 1 | 0 | 0 |
| P4 | 0 | 0 | 0 | 0 |
| P5 | 2 | 1 | 1 | 0 |

no of resources still needed by each process to proceed

# Banker's algorithm for multiple resource

| Tape Drive | Plotters | Scanners | CD Roms |
|---|---|---|---|
| 6 | 3 | 4 | 2 |

total no of each resource

| Tape Drive | Plotters | Scanners | CD Roms |
|---|---|---|---|
| 5 | 3 | 2 | 2 |

resources hold

| Tape Drive | Plotters | Scanners | CD Roms |
|---|---|---|---|
| 2 | 1 | 2 | 1 |

Available (free) resources

| Process | Tape Drive | Plotters | Scanners | CD Roms |
|---|---|---|---|---|
| P1 | 3 | 0 | 1 | 1 |
| P2 | 0 | 1 | 0 | 0 |
| P3 | 1 | 1 | 1 | 0 |
| P4 | - | - | - | - |
| P5 | 0 | 0 | 0 | 0 |

no of resources held by each process

| Process | Tape Drive | Plotters | Scanners | CD Roms |
|---|---|---|---|---|
| P1 | 1 | 1 | 0 | 0 |
| P2 | 0 | 1 | 1 | 2 |
| P3 | 3 | 1 | 0 | 0 |
| P4 | 0 | 0 | 0 | 0 |
| P5 | 2 | 1 | 1 | 0 |

no of resources still needed by each process to proceed

# Banker's algorithm for multiple resource

| Tape Drive | Plotters | Scanners | CD Roms |
|---|---|---|---|
| 6 | 3 | 4 | 2 |

total no of each resource

| Tape Drive | Plotters | Scanners | CD Roms |
|---|---|---|---|
| 5 | 3 | 2 | 2 |

resources hold

| Tape Drive | Plotters | Scanners | CD Roms |
|---|---|---|---|
| 1 | 0 | 2 | 1 |

Available (free) resources

| Process | Tape Drive | Plotters | Scanners | CD Roms |
|---|---|---|---|---|
| P1 | 4 | 1 | 1 | 1 |
| P2 | 0 | 1 | 0 | 0 |
| P3 | 1 | 1 | 1 | 0 |
| P4 | - | - | - | - |
| P5 | 0 | 0 | 0 | 0 |

no of resources held by each process

| Process | Tape Drive | Plotters | Scanners | CD Roms |
|---|---|---|---|---|
| P1 | 0 | 0 | 0 | 0 |
| P2 | 0 | 1 | 1 | 2 |
| P3 | 3 | 1 | 0 | 0 |
| P4 | 0 | 0 | 0 | 0 |
| P5 | 2 | 1 | 1 | 0 |

no of resources still needed by each process to proceed

# Banker's algorithm for multiple resource

| Tape Drive | Plotters | Scanners | CD Roms |
|---|---|---|---|
| 6 | 3 | 4 | 2 |

total no of each resource

| Tape Drive | Plotters | Scanners | CD Roms |
|---|---|---|---|
| 5 | 3 | 2 | 2 |

resources hold

| Tape Drive | Plotters | Scanners | CD Roms |
|---|---|---|---|
| 5 | 1 | 3 | 2 |

Available (free) resources

| Process | Tape Drive | Plotters | Scanners | CD Roms |
|---|---|---|---|---|
| P1 | - | - | - | - |
| P2 | 0 | 1 | 0 | 0 |
| P3 | 1 | 1 | 1 | 0 |
| P4 | - | - | - | - |
| P5 | 0 | 0 | 0 | 0 |

no of resources held by each process

| Process | Tape Drive | Plotters | Scanners | CD Roms |
|---|---|---|---|---|
| P1 | 0 | 0 | 0 | 0 |
| P2 | 0 | 1 | 1 | 2 |
| P3 | 3 | 1 | 0 | 0 |
| P4 | 0 | 0 | 0 | 0 |
| P5 | 2 | 1 | 1 | 0 |

no of resources still needed by each process to proceed

# Banker's algorithm for multiple resource

| Tape Drive | Plotters | Scanners | CD Roms |
|---|---|---|---|
| 6 | 3 | 4 | 2 |

total no of each resource

| Tape Drive | Plotters | Scanners | CD Roms |
|---|---|---|---|
| 5 | 3 | 2 | 2 |

resources hold

| Tape Drive | Plotters | Scanners | CD Roms |
|---|---|---|---|
| 5 | 0 | 2 | 0 |

Available (free) resources

| Process | Tape Drive | Plotters | Scanners | CD Roms |
|---|---|---|---|---|
| P1 | - | - | - | - |
| P2 | 0 | 2 | 1 | 2 |
| P3 | 1 | 1 | 1 | 0 |
| P4 | - | - | - | - |
| P5 | 0 | 0 | 0 | 0 |

no of resources held by each process

| Process | Tape Drive | Plotters | Scanners | CD Roms |
|---|---|---|---|---|
| P1 | 0 | 0 | 0 | 0 |
| P2 | 0 | 0 | 0 | 0 |
| P3 | 3 | 1 | 0 | 0 |
| P4 | 0 | 0 | 0 | 0 |
| P5 | 2 | 1 | 1 | 0 |

no of resources still needed by each process to proceed

# Banker's algorithm for multiple resource

| Tape Drive | Plotters | Scanners | CD Roms |
|---|---|---|---|
| 6 | 3 | 4 | 2 |

total no of each resource

| Tape Drive | Plotters | Scanners | CD Roms |
|---|---|---|---|
| 5 | 3 | 2 | 2 |

resources hold

| Tape Drive | Plotters | Scanners | CD Roms |
|---|---|---|---|
| 5 | 2 | 3 | 2 |

Available (free) resources

| Process | Tape Drive | Plotters | Scanners | CD Roms |
|---|---|---|---|---|
| P1 | - | - | - | - |
| P2 | - | - | - | - |
| P3 | 1 | 1 | 1 | 0 |
| P4 | - | - | - | - |
| P5 | 0 | 0 | 0 | 0 |

no of resources held by each process

| Process | Tape Drive | Plotters | Scanners | CD Roms |
|---|---|---|---|---|
| P1 | 0 | 0 | 0 | 0 |
| P2 | 0 | 0 | 0 | 0 |
| P3 | 3 | 1 | 0 | 0 |
| P4 | 0 | 0 | 0 | 0 |
| P5 | 2 | 1 | 1 | 0 |

no of resources still needed by each process to proceed

# Banker's algorithm for multiple resource

| Tape Drive | Plotters | Scanners | CD Roms |
|---|---|---|---|
| 6 | 3 | 4 | 2 |

total no of each resource

| Tape Drive | Plotters | Scanners | CD Roms |
|---|---|---|---|
| 5 | 3 | 2 | 2 |

resources hold

| Tape Drive | Plotters | Scanners | CD Roms |
|---|---|---|---|
| 2 | 1 | 3 | 2 |

Available (free) resources

| Process | Tape Drive | Plotters | Scanners | CD Roms |
|---|---|---|---|---|
| P1 | - | - | - | - |
| P2 | - | - | - | - |
| P3 | 4 | 2 | 1 | 0 |
| P4 | - | - | - | - |
| P5 | 0 | 0 | 0 | 0 |

no of resources held by each process

| Process | Tape Drive | Plotters | Scanners | CD Roms |
|---|---|---|---|---|
| P1 | 0 | 0 | 0 | 0 |
| P2 | 0 | 0 | 0 | 0 |
| P3 | 0 | 0 | 0 | 0 |
| P4 | 0 | 0 | 0 | 0 |
| P5 | 2 | 1 | 1 | 0 |

no of resources still needed by each process to proceed

# Banker's algorithm for multiple resource

| Tape Drive | Plotters | Scanners | CD Roms |
|---|---|---|---|
| 6 | 3 | 4 | 2 |

total no of each resource

| Tape Drive | Plotters | Scanners | CD Roms |
|---|---|---|---|
| 5 | 3 | 2 | 2 |

resources hold

| Tape Drive | Plotters | Scanners | CD Roms |
|---|---|---|---|
| 6 | 3 | 4 | 2 |

Available (free) resources

| Process | Tape Drive | Plotters | Scanners | CD Roms |
|---|---|---|---|---|
| P1 | - | - | - | - |
| P2 | - | - | - | - |
| P3 | - | - | - | - |
| P4 | - | - | - | - |
| P5 | 0 | 0 | 0 | 0 |

no of resources held by each process

| Process | Tape Drive | Plotters | Scanners | CD Roms |
|---|---|---|---|---|
| P1 | 0 | 0 | 0 | 0 |
| P2 | 0 | 0 | 0 | 0 |
| P3 | 0 | 0 | 0 | 0 |
| P4 | 0 | 0 | 0 | 0 |
| P5 | 2 | 1 | 1 | 0 |

no of resources still needed by each process to proceed

# Banker's algorithm for multiple resource

| Tape Drive | Plotters | Scanners | CD Roms |
|---|---|---|---|
| 6 | 3 | 4 | 2 |

total no of each resource

| Tape Drive | Plotters | Scanners | CD Roms |
|---|---|---|---|
| 5 | 3 | 2 | 2 |

resources hold

| Tape Drive | Plotters | Scanners | CD Roms |
|---|---|---|---|
| 4 | 2 | 3 | 2 |

Available (free) resources

| Process | Tape Drive | Plotters | Scanners | CD Roms |
|---|---|---|---|---|
| P1 | - | - | - | - |
| P2 | - | - | - | - |
| P3 | - | - | - | - |
| P4 | - | - | - | - |
| P5 | 2 | 1 | 1 | 0 |

no of resources held by each process

| Process | Tape Drive | Plotters | Scanners | CD Roms |
|---|---|---|---|---|
| P1 | 0 | 0 | 0 | 0 |
| P2 | 0 | 0 | 0 | 0 |
| P3 | 0 | 0 | 0 | 0 |
| P4 | 0 | 0 | 0 | 0 |
| P5 | 0 | 0 | 0 | 0 |

no of resources still needed by each process to proceed

# Banker's algorithm for multiple resource

| Tape Drive | Plotters | Scanners | CD Roms |
|---|---|---|---|
| 6 | 3 | 4 | 2 |

total no of each resource

| Tape Drive | Plotters | Scanners | CD Roms |
|---|---|---|---|
| 5 | 3 | 2 | 2 |

resources hold

| Tape Drive | Plotters | Scanners | CD Roms |
|---|---|---|---|
| 6 | 3 | 4 | 2 |

Available (free) resources

| Process | Tape Drive | Plotters | Scanners | CD Roms |
|---|---|---|---|---|
| P1 | - | - | - | - |
| P2 | - | - | - | - |
| P3 | - | - | - | - |
| P4 | - | - | - | - |
| P5 | - | - | - | - |

no of resources held by each process

| Process | Tape Drive | Plotters | Scanners | CD Roms |
|---|---|---|---|---|
| P1 | 0 | 0 | 0 | 0 |
| P2 | 0 | 0 | 0 | 0 |
| P3 | 0 | 0 | 0 | 0 |
| P4 | 0 | 0 | 0 | 0 |
| P5 | 0 | 0 | 0 | 0 |

no of resources still needed by each process to proceed

# Banker's algorithm for multiple resource

| Tape Drive | Plotters | Scanners | CD Roms |
|---|---|---|---|
| 6 | 3 | 4 | 2 |

total no of each resource

| Tape Drive | Plotters | Scanners | CD Roms |
|---|---|---|---|
| 5 | 3 | 2 | 2 |

resources hold

| Tape Drive | Plotters | Scanners | CD Roms |
|---|---|---|---|
| 1 | 0 | 2 | 0 |

Available (free) resources

| Process | Tape Drive | Plotters | Scanners | CD Roms |
|---|---|---|---|---|
| P1 | 3 | 0 | 1 | 1 |
| P2 | 0 | 1 | 0 | 0 |
| P3 | 1 | 1 | 1 | 0 |
| P4 | 1 | 1 | 0 | 1 |
| P5 | 0 | 0 | 0 | 0 |

no of resources held by each process

| Process | Tape Drive | Plotters | Scanners | CD Roms |
|---|---|---|---|---|
| P1 | 1 | 1 | 0 | 0 |
| P2 | 0 | 1 | 1 | 2 |
| P3 | 3 | 1 | 0 | 0 |
| P4 | 0 | 0 | 1 | 1 |
| P5 | 2 | 1 | 1 | 0 |

no of resources still needed by each process to proceed

# Deadlock prevention

- Deadlock can be **prevented by attacking the one of the four conditions** that leads to deadlock.
  1. Attacking the Mutual Exclusion Condition
  2. Attacking the Hold and Wait Condition
  3. Attacking the No Preemption Condition
  4. Attacking the Circular Wait Condition

# Attacking the mutual exclusion condition

- No deadlock **if each resource can be assigned to more than one process**.
- We **can not assign some resources to more than one process** at a time such as **CD-Recorder**, **Printer** etc…
- So, this solution is not feasible.

# Attacking the hold and wait condition

- Require processes to **request all their resources before starting execution**.
- A process is **allowed to run if all resources it needed is available**. Otherwise, no resource will be allocated, and it will just wait.
- Problem with this strategy is that a **process may not know required resources at start of run**.
- Resource will not be used optimally.

# Attacking the no preemption condition

- When a process **P0 request some resource R which is held by another process P1** then **resource R is forcibly taken away from the process P1 and allocated to P0**.
- Consider a **process holds the printer**, **halfway through its job; taking the printer away from this process without having any ill effect is not possible**.
- This is not a possible option.

# Attacking the circular wait condition

- Provide a **global numbering of all the resources**.
- Now the rule is that: **processes can request resources whenever they want to, but all requests must be made in numerical order**.
- A process need not acquire them all at once.
- Circular wait is prevented if a process holding resource n cannot wait for resource m, if m > n.
  1. Printer
  2. Scanner
  3. Plotter
  4. Tape Drive
  5. CD Rom
- A process may request 1st a CD ROM, then tape drive. But it may not request 1st a tape drive, then CD ROM.
- Resource graph can never have cycle.

# Q/A

- The maximum number of processes that can be in *Ready* state for a computer system with *n* CPUs is

(A) n (B) n2 (C) 2n **(D) Independent of n**

- A system has 6 identical resources and N processes competing for them. Each process can request at most 2 resources. Which one of the following values of N could lead to a deadlock?

(A) 1 (B) 2 (C) 3 **(D) 6**

# Exercise

- Consider system with five processes and three resource types and at time $T_0$ the following snapshot of the system has been taken.

| PID | Allocated | | | Maximum | | | Available | | |
|---|---|---|---|---|---|---|---|---|---|
| | R1 | R2 | R3 | R1 | R2 | R3 | R1 | R2 | R3 |
| P1 | 1 | 1 | 2 | 4 | 3 | 3 | 3 | 1 | 0 |
| P2 | 2 | 1 | 2 | 3 | 2 | 2 | | | |
| P3 | 4 | 0 | 1 | 9 | 0 | 2 | | | |
| P4 | 0 | 2 | 0 | 7 | 5 | 3 | | | |
| P5 | 1 | 1 | 2 | 11 | 2 | 3 | | | |

i) Compute the need matrix
ii) Determine if the state is safe or not using *Banker's algorithm*
iii) Would the request P2<2, 1, 1> be granted in the current state?

# Example

- Consider a system consisting of four resources of same type that are shared by three processes, each of which needs at most two resources. Show the system is deadlock free.

| Process | Has | Max |
|---|---|---|
| A | 1 | 2 |
| B | 1 | 2 |
| C | 1 | 2 |
| Total : 4, Free : 1 | | |

| Process | Has | Max |
|---|---|---|
| A | 2 | 2 |
| B | 1 | 2 |
| C | 1 | 2 |
| Free : 0 | | |

| Process | Has | Max |
|---|---|---|
| A | 0 | 0 |
| B | 1 | 2 |
| C | 1 | 2 |
| Free : 2 | | |

| Process | Has | Max |
|---|---|---|
| A | 0 | 0 |
| B | 2 | 2 |
| C | 1 | 2 |
| Free : 1 | | |

| Process | Has | Max |
|---|---|---|
| A | 0 | 0 |
| B | 0 | 0 |
| C | 1 | 2 |
| Free : 3 | | |

| Process | Has | Max |
|---|---|---|
| A | 0 | 0 |
| B | 0 | 0 |
| C | 2 | 2 |
| Free : 2 | | |

| Process | Has |
|---|---|
| A | 0 |
| B | 0 |
| C | 0 |
| Free : 4 | |

# Questions

1. What is RAG? Explain briefly.
2. What is Deadlock? List the conditions that lead to deadlock. How Deadlock can be prevented?
3. Which are the necessary conditions for Deadlock? Explain Deadlock recovery in brief.

# Questions

4. Consider the snapshot of the system with Five Processes and Four types of resources A,B,C,D.

| | Allocation | | | | | Max | | | |
|---|---|---|---|---|---|---|---|---|---|
| | A | B | C | D | | A | B | C | D |
| P0 | 0 | 0 | 1 | 2 | | 0 | 0 | 1 | 2 |
| P1 | 1 | 0 | 0 | 0 | | 1 | 7 | 5 | 0 |
| P2 | 1 | 3 | 5 | 4 | | 2 | 3 | 5 | 6 |
| P3 | 0 | 6 | 3 | 2 | | 0 | 6 | 5 | 2 |
| P4 | 0 | 0 | 1 | 4 | | 0 | 6 | 5 | 6 |

- Currently Available set of resources is (1,5,2,0).
- Answer the following Questions using bankers algorithm.

I. Find the content of Need Matrix.

II. Is the System in Safe State?

III. If request from Process P1 arrives for (0,4,2,0) can the request be granted immediately

Thank
you