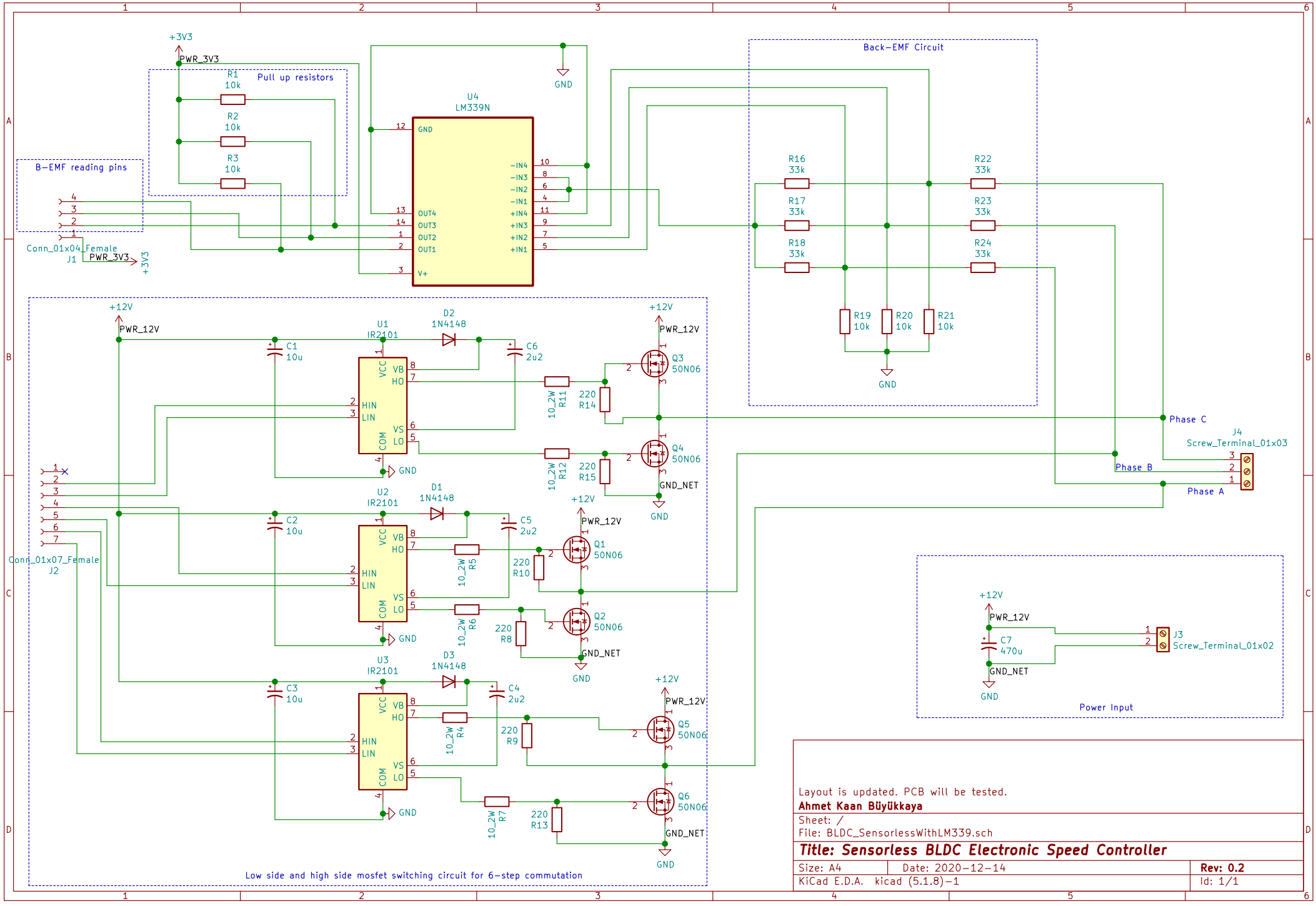

Layout is updated. PCB will be tested.

Ahmet Kaan Büyükkaya

Sheet: /

File: BLDC_SensorlessWithLM339.sch

Title: Sensorless BLDC Electronic Speed Controller

Size: A4	Date: 2020-12-14	**Rev: 0.2**
KiCad E.D.A. kicad (5.1.8)-1		Id: 1/1