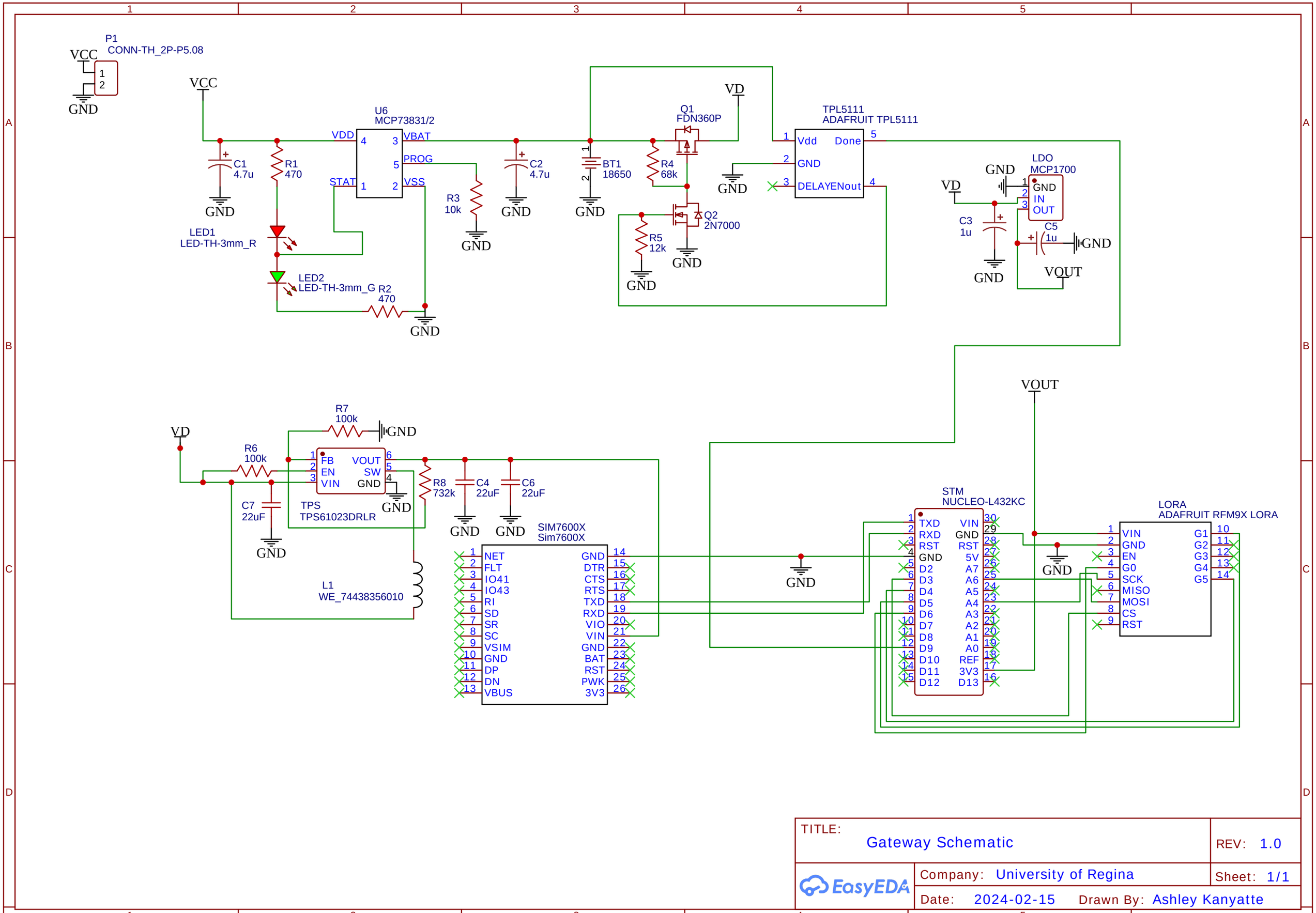

TITLE: Gateway Schematic	REV: 1.0
EasyEDA — Company: University of Regina	Sheet: 1/1
Date: 2024-02-15	Drawn By: Ashley Kanyatte