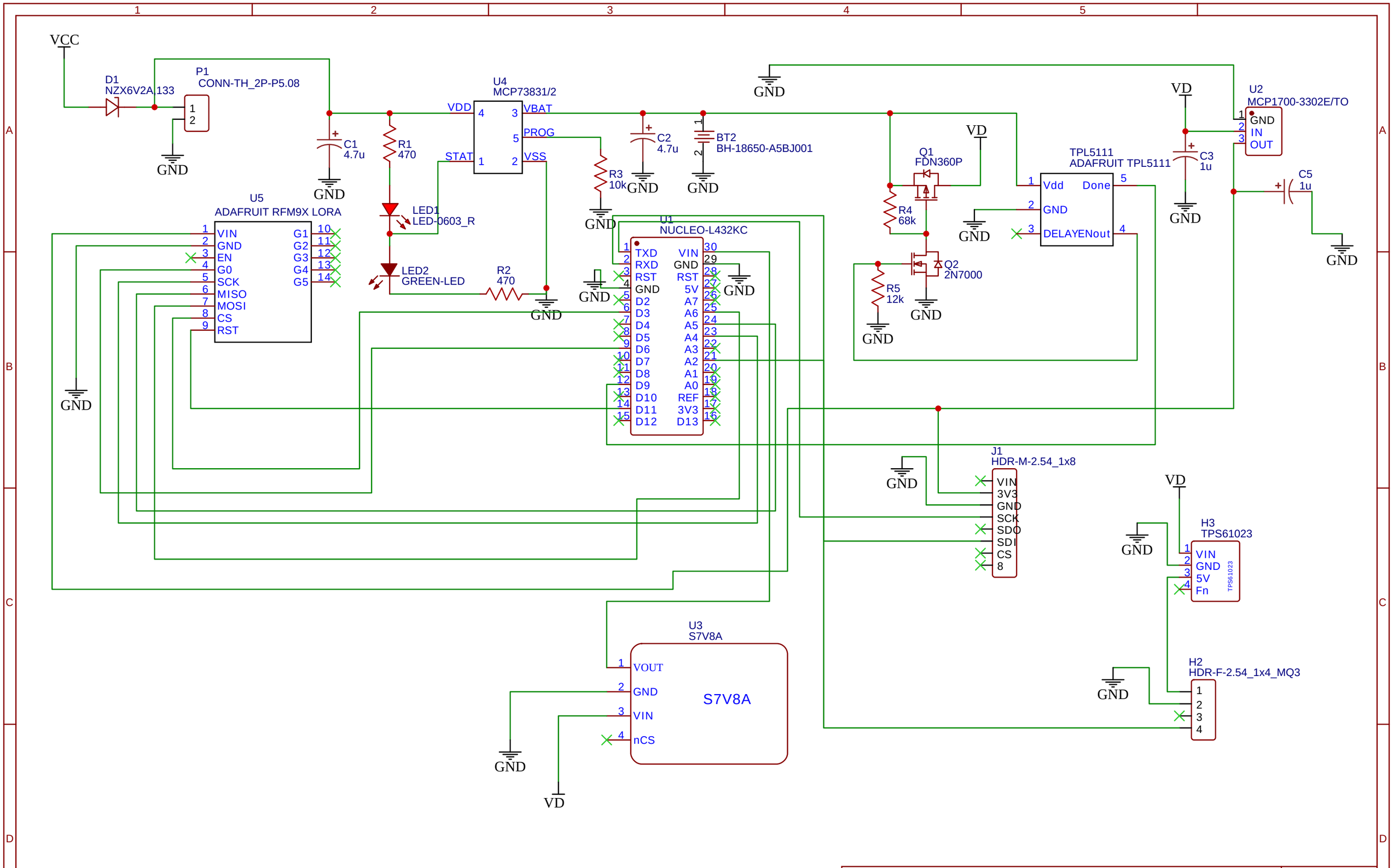

TITLE: Node		REV: 1.0
EasyEDA	Company: LoRaFireNet	Sheet: 1/1
	Date: 2023-11-22 Drawn By: sshuaib	

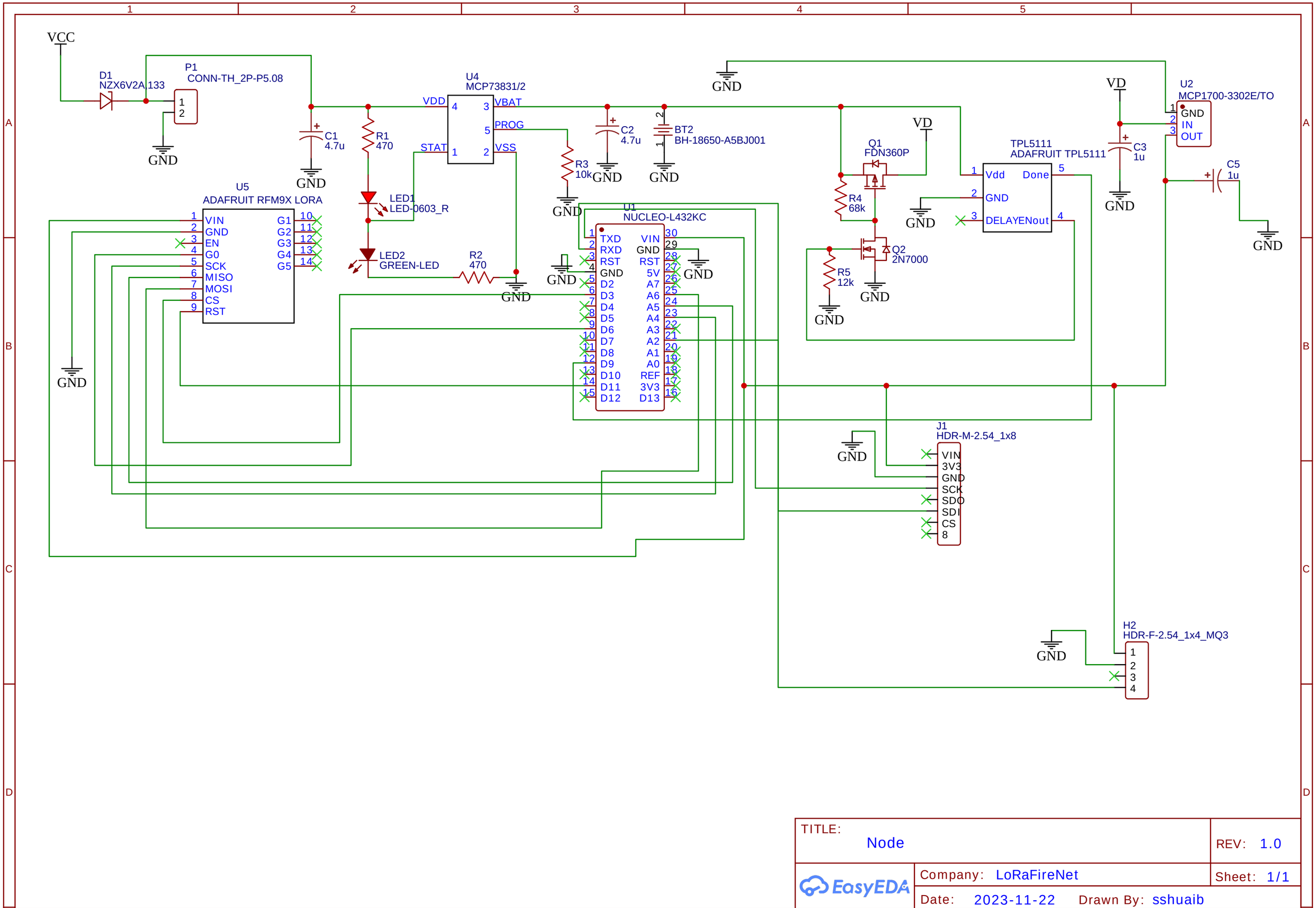

TITLE: Node		REV: 1.0
EasyEDA	Company: LoRaFireNet	Sheet: 1/1
	Date: 2023-11-22 Drawn By: sshuaib	