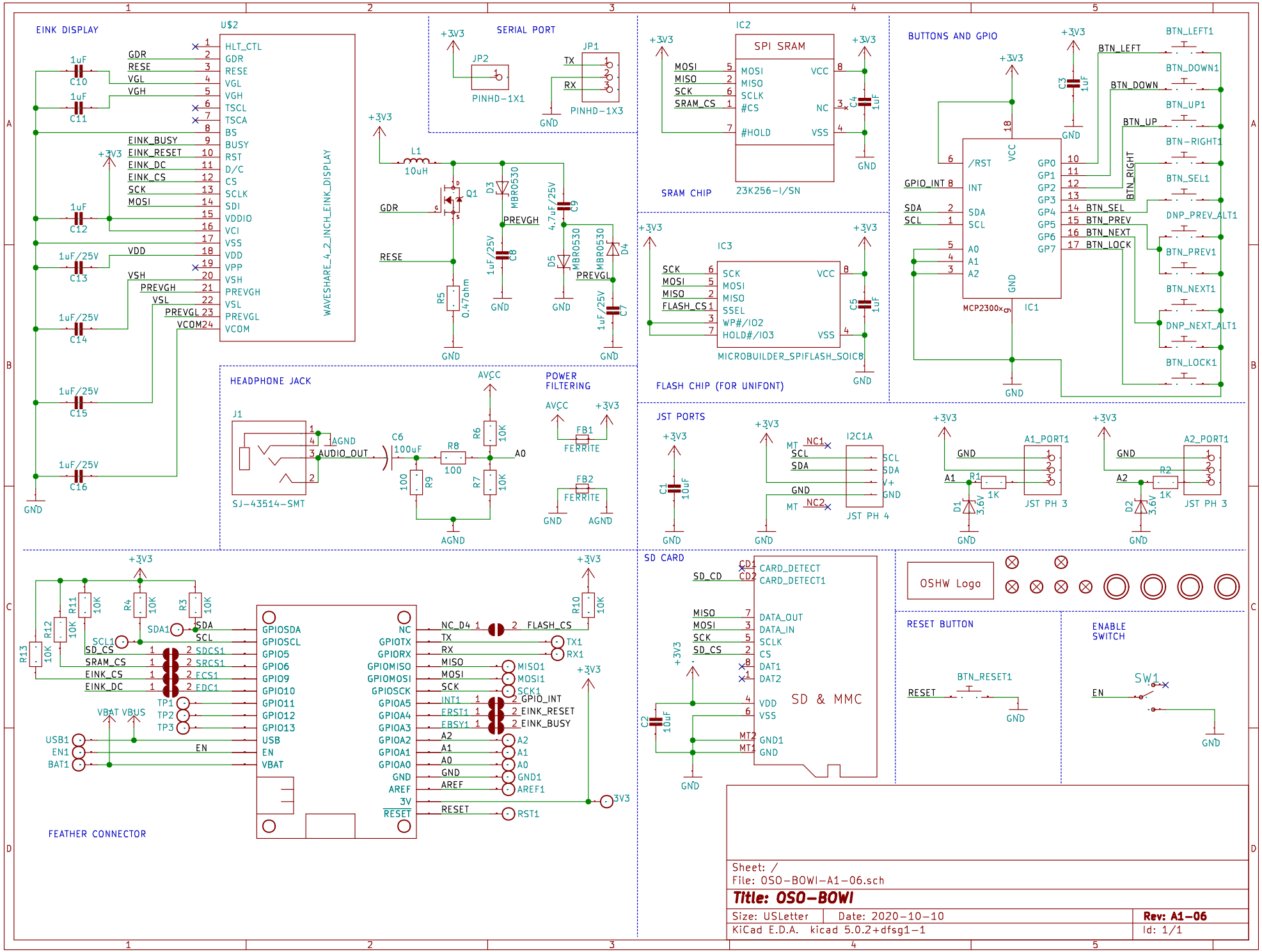
EINK DISPLAY
U$2
WAVESHARE_4_2_INCH_EINK_DISPLAY
HLT_CTL
GDR
RESE
VGL
VGH
TSCL
TSCA
BS
BUSY
RST
D/C
CS
SCLK
SDI
VDDIO
VCI
VSS
VDD
VPP
VSH
PREVGH
VSL
PREVGL
VCOM
EINK_BUSY
EINK_RESET
EINK_DC
EINK_CS
SCK
MOSI
C10 1uF
C11 1uF
C12 1uF
C13 1uF/25V
C14 1uF/25V
C15 1uF/25V
C16 1uF/25V
+3V3
GND
SERIAL PORT
JP2
PINHD-1X1
JP1
PINHD-1X3
TX
RX
L1 10uH
Q1
D3 MBR0530
D4 MBR0530
D5 MBR0530
C9 4.7uF/25V
C8 1uF/25V
C7 1uF/25V
R5 0.47ohm
PREVGH
PREVGL
IC2
SPI SRAM
MOSI
MISO
SCK
SRAM_CS
#CS
#HOLD
VCC
NC
VSS
C4 1uF
23K256-I/SN
SRAM CHIP
IC3
SCK
MOSI
MISO
FLASH_CS
SSEL
WP#/IO2
HOLD#/IO3
C5 1uF
MICROBUILDER_SPIFLASH_SOIC8
FLASH CHIP (FOR UNIFONT)
BUTTONS AND GPIO
C3 1uF
/RST
INT
SDA
SCL
A0
A1
A2
GPIO_INT
GP0
GP1
GP2
GP3
GP4
GP5
GP6
GP7
BTN_LEFT
BTN_DOWN
BTN_UP
BTN_RIGHT
BTN_SEL
BTN_PREV
BTN_NEXT
BTN_LOCK
BTN_LEFT1
BTN_DOWN1
BTN_UP1
BTN-RIGHT1
BTN_SEL1
DNP_PREV_ALT1
BTN_PREV1
BTN_NEXT1
DNP_NEXT_ALT1
BTN_LOCK1
MCP2300x
IC1
HEADPHONE JACK
J1
AGND
AUDIO_OUT
SJ-43514-SMT
C6 100uF
R8 100
R9 100
R6 10K
R7 10K
AVCC
A0
POWER FILTERING
FB1 FERRITE
FB2 FERRITE
JST PORTS
C1 10uF
I2C1A
MT
NC1
NC2
SCL
SDA
V+
JST PH 4
A1_PORT1
A2_PORT1
R1 1K
R2 1K
D1 3.6V
D2 3.6V
JST PH 3
FEATHER CONNECTOR
R11 10K
R4 10K
R3 10K
R12 10K
R13 10K
R10 10K
SDA1
SCL1
SD_CS
SRAM_CS
EINK_CS
EINK_DC
SDCS1
SRCS1
ECS1
EDC1
TP1
TP2
TP3
VBAT
VBUS
USB1
EN1
BAT1
USB
EN
GPIOSDA
GPIOSCL
GPIO5
GPIO6
GPIO9
GPIO10
GPIO11
GPIO12
GPIO13
NC
GPIOTX
GPIORX
GPIOMISO
GPIOMOSI
GPIOSCK
GPIOA5
GPIOA4
GPIOA3
GPIOA2
GPIOA1
GPIOA0
AREF
3V
RESET
NC_D4
FLASH_CS
INT1
ERST1
EBSY1
GPIO_INT
EINK_RESET
EINK_BUSY
MISO1
MOSI1
SCK1
A2
A1
A0
GND1
AREF1
RST1
SD CARD
CD1
CD2
CARD_DETECT
CARD_DETECT1
DATA_OUT
DATA_IN
DAT1
DAT2
VDD
VSS
MT2
MT1
GND1
SD & MMC
C2 10uF
OSHW Logo
RESET BUTTON
BTN_RESET1
RESET
ENABLE SWITCH
SW1
EN
Sheet: /
File: OSO-BOWI-A1-06.sch
Title: OSO-BOWI
Size: USLetter
Date: 2020-10-10
Rev: A1-06
KiCad E.D.A. kicad 5.0.2+dfsg1-1
Id: 1/1