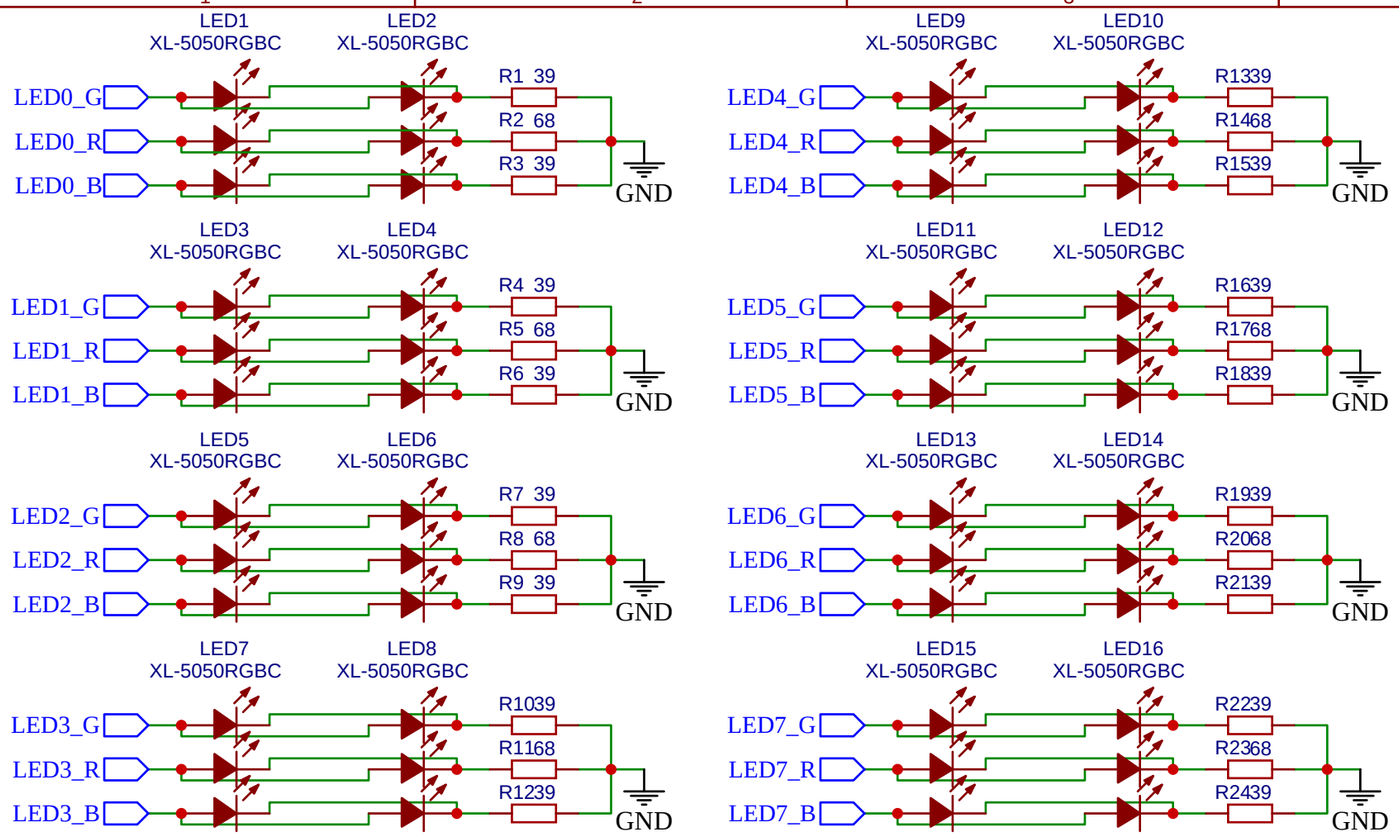

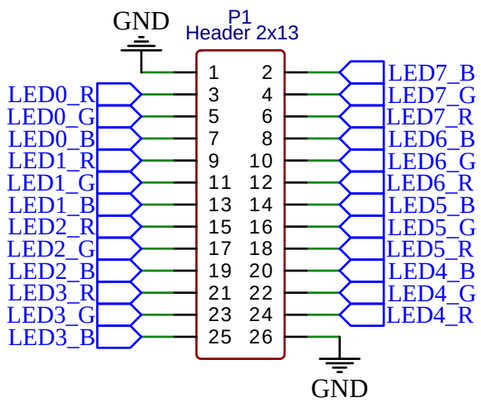

TITLE: POV RGB Hard Drive Clock v1 - LED		REV: 1.0
嘉立创EDA	Company: A Lumine Motus	Sheet: 1/1
	Date: 2023-03-23 Drawn By: A Lumine Motus	