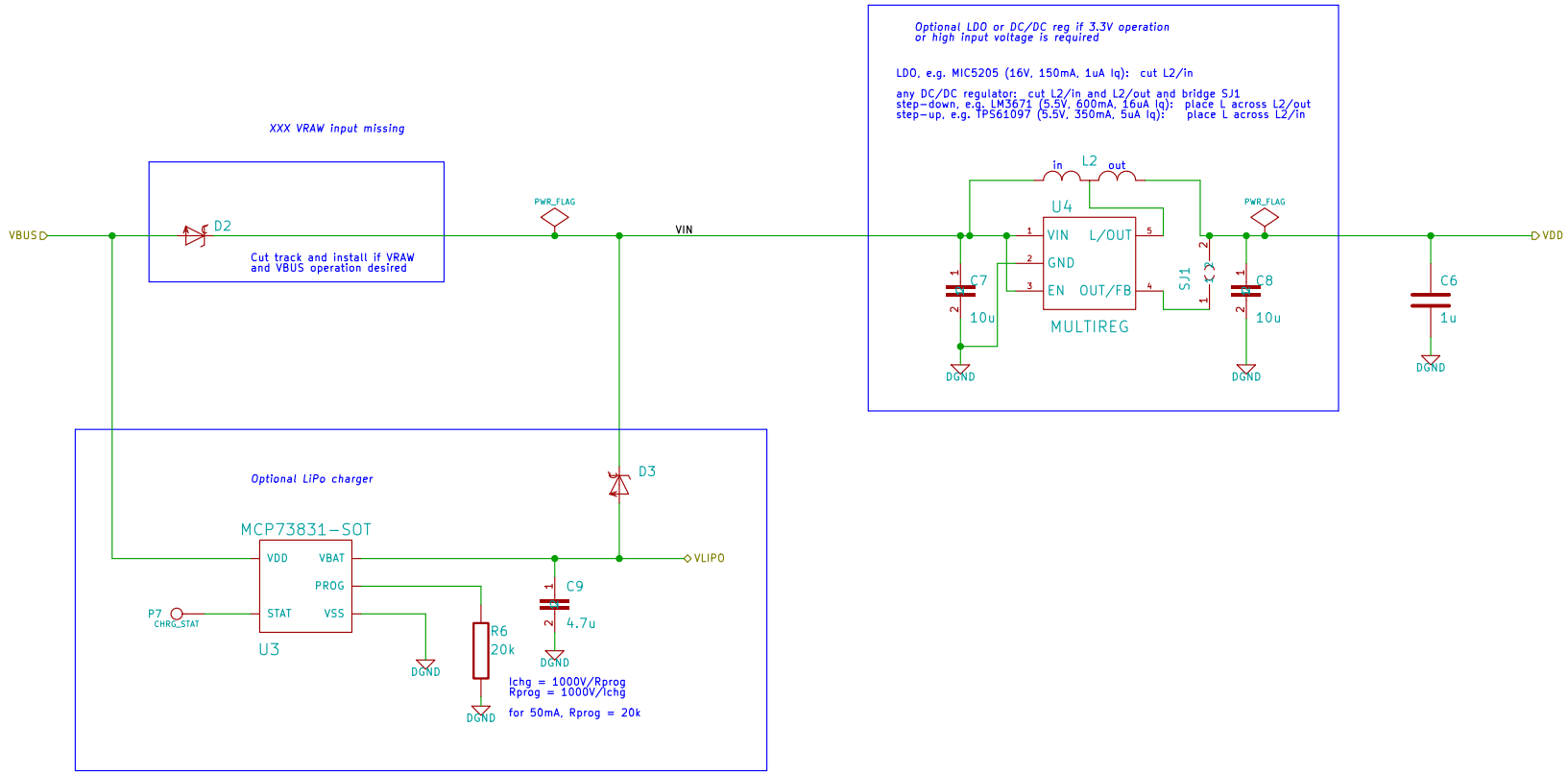

CERN OHL v.1.1 or later
(c) 2011,2012 Simon Schubert

File: power.sch
Sheet: /power/

Title: MC HCK power distribution

Size: A4	**Date: 28 aug 2012**	**Rev: 3**
KiCad E.D.A.		Id: 2/2