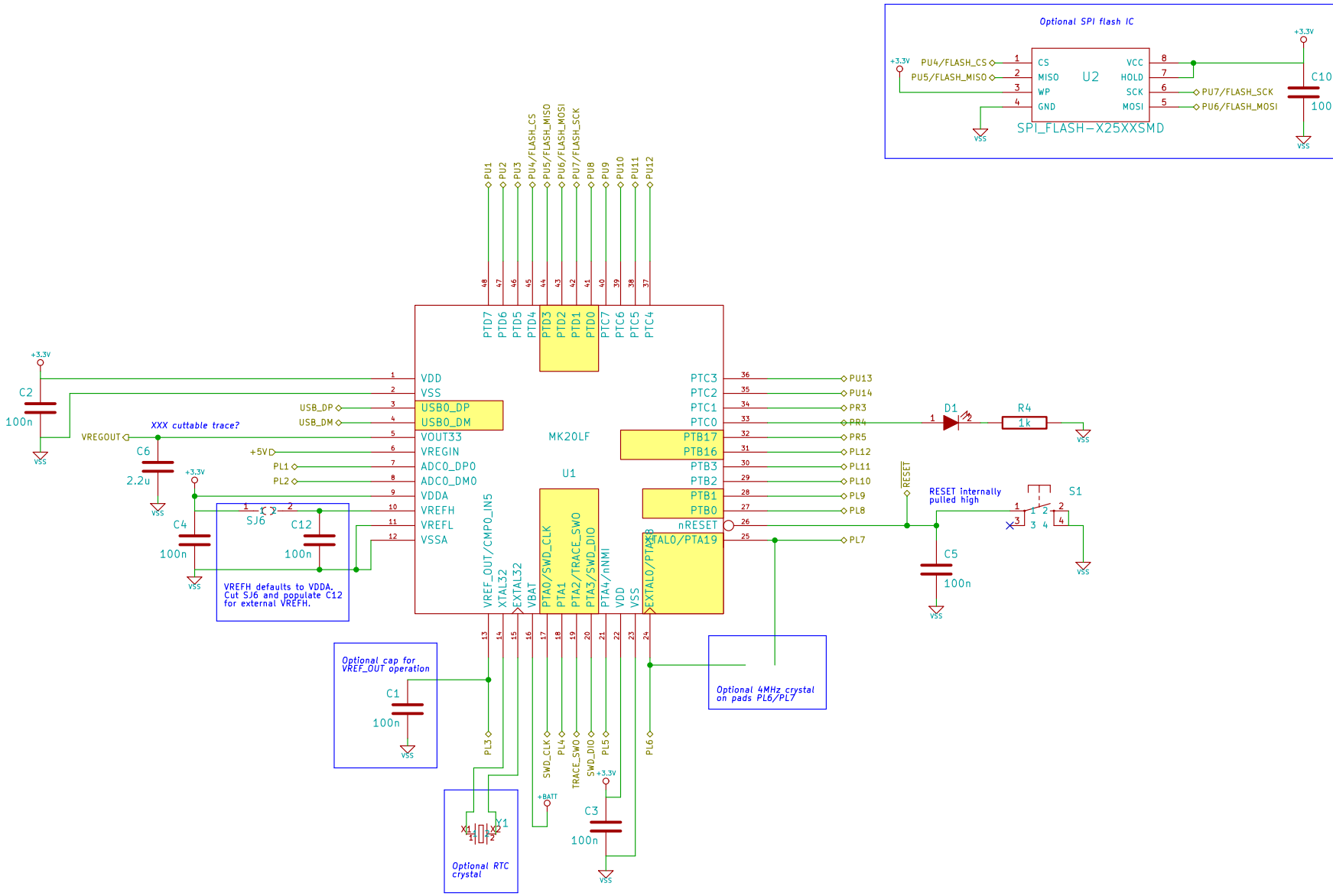

CERN OHL v.1.1 or later
(c) 2011,2012 Simon Schubert

File: mcu.sch
Sheet: /MCU/

Title: MC HCK micro controller board

Size: A4	**Date: 6 sep 2012**	**Rev: 4**
KiCad E.D.A.		Id: 4/4