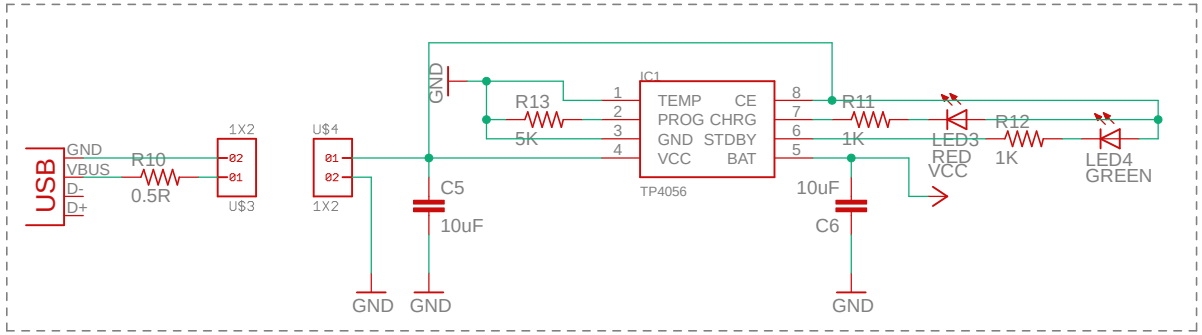
USB
GND
VBUS
D-
D+
R10
0.5R
1X2
U$3
U$4
1X2
GND
GND
C5
10uF
R13
5K
IC1
TEMP
PROG
GND
VCC
CE
CHRG
STDBY
BAT
TP4056
R11
1K
10uF
C6
GND
LED3
RED
VCC
R12
1K
LED4
GREEN

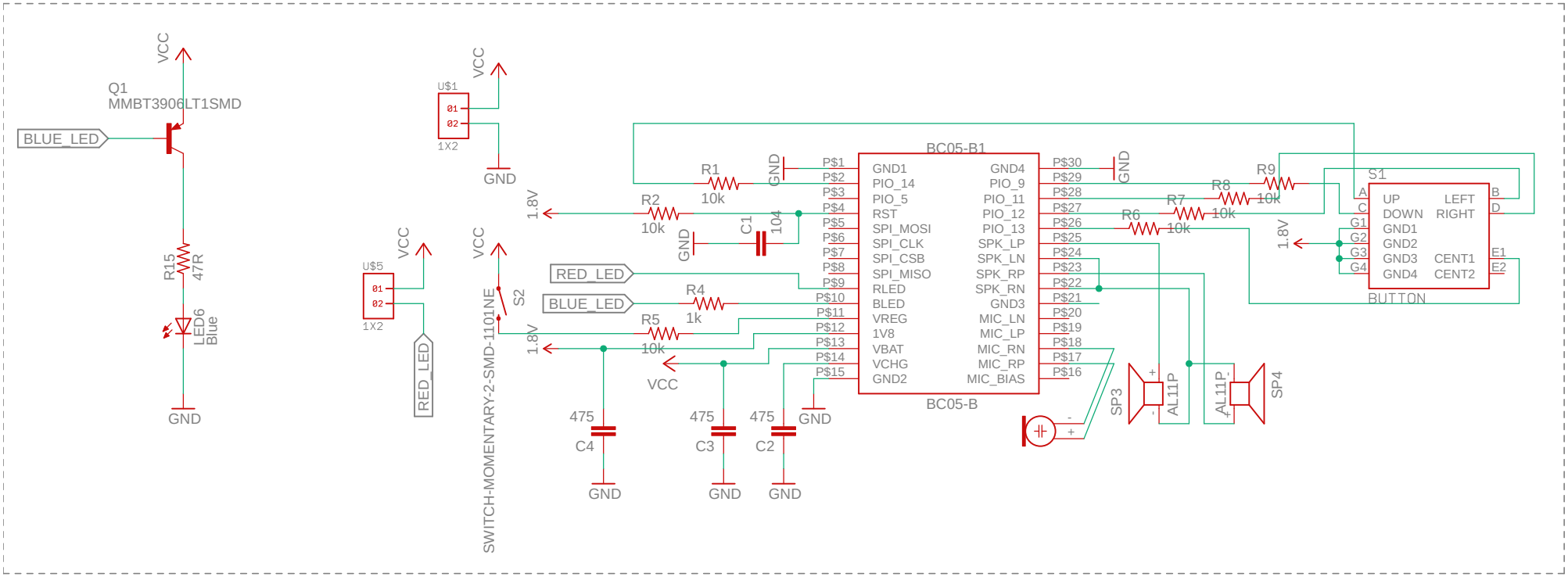
Q1
MMBT3906LT1SMD
VCC
BLUE_LED
R15
47R
LED6
Blue
GND
U$1
1X2
GND
U$5
1X2
RED_LED
SWITCH-MOMENTARY-2-SMD-1101NE
S2
1.8V
R1
10k
R2
10k
C1
104
R4
1k
R5
10k
RED_LED
BLUE_LED
BC05-B1
BC05-B
GND1
PIO_14
PIO_5
RST
SPI_MOSI
SPI_CLK
SPI_CSB
SPI_MISO
RLED
BLED
VREG
1V8
VBAT
VCHG
GND2
GND4
PIO_9
PIO_11
PIO_12
PIO_13
SPK_LP
SPK_LN
SPK_RP
SPK_RN
GND3
MIC_LN
MIC_LP
MIC_RN
MIC_RP
MIC_BIAS
P$1
P$2
P$3
P$4
P$5
P$6
P$7
P$8
P$9
P$10
P$11
P$12
P$13
P$14
P$15
P$16
P$17
P$18
P$19
P$20
P$21
P$22
P$23
P$24
P$25
P$26
P$27
P$28
P$29
P$30
475
C4
475
C3
475
C2
R9
10k
R8
10k
R7
10k
R6
10k
S1
UP
DOWN
GND1
GND2
GND3
GND4
LEFT
RIGHT
CENT1
CENT2
BUTTON
SP3
AL11P
AL11P
SP4