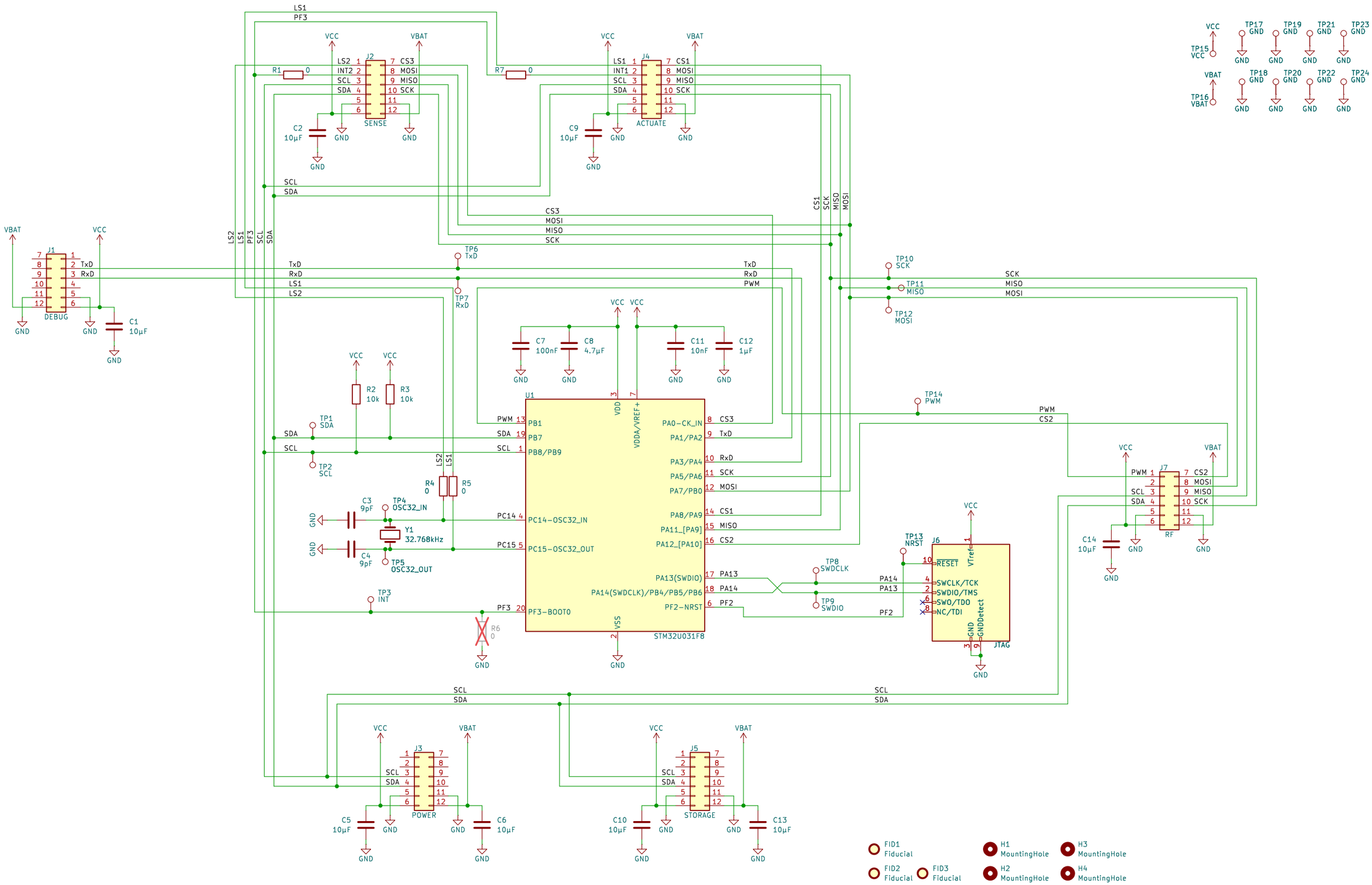

AMBIENT 6G

KU LEUVEN

DRAMCO

AMBIENT-6G END Platform		
STM32U0 low-power MCU based main board		
6gend-mb1		
Design: Tijl Schepens		**Rev: 1a**
Date: 2026-02-10	Size: A3	Page: 1/1