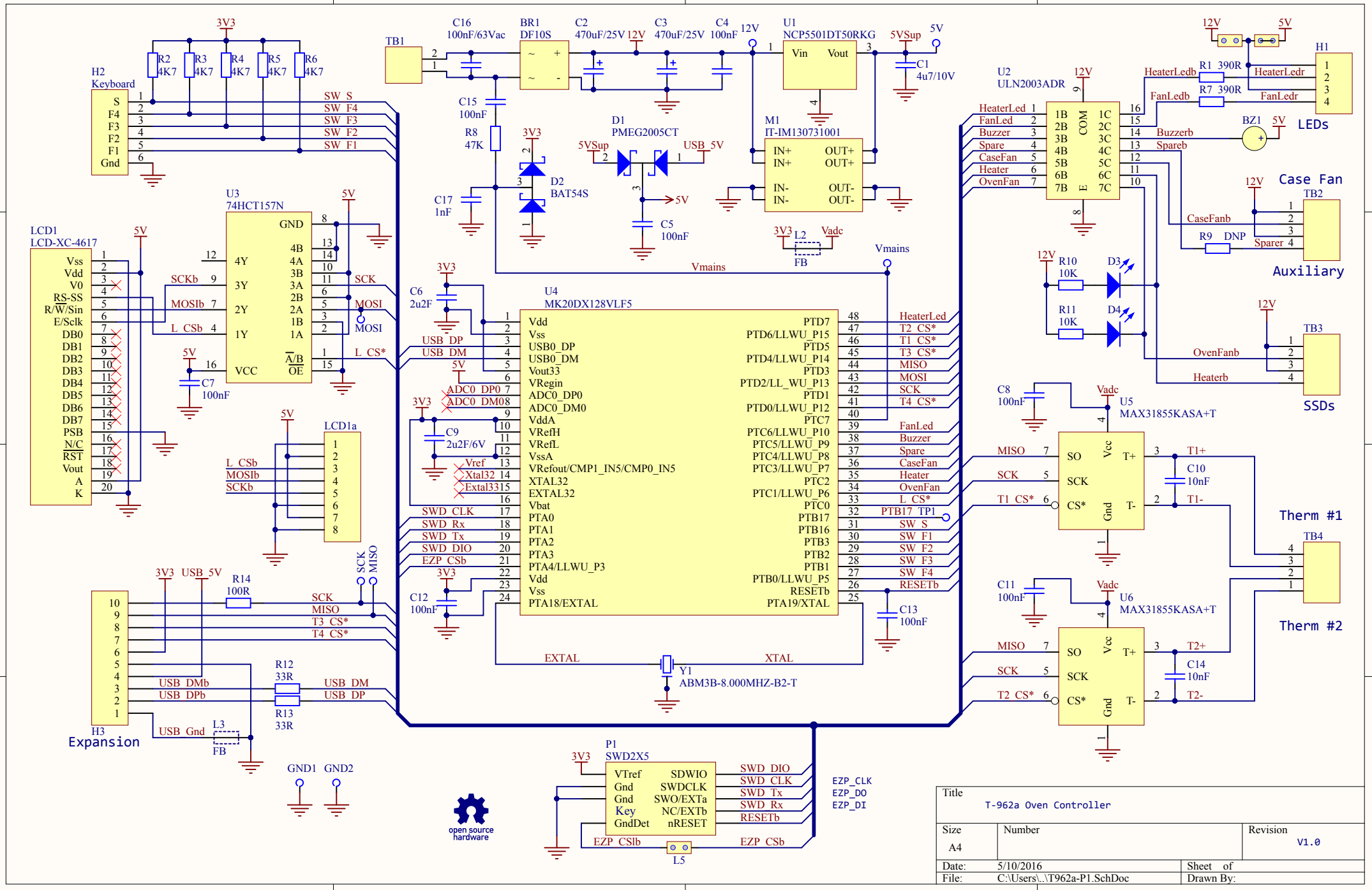
H2
Keyboard
R2 4K7
R3 4K7
R4 4K7
R5 4K7
R6 4K7
SW_S
SW_F4
SW_F3
SW_F2
SW_F1
TB1
C16 100nF/63Vac
BR1 DF10S
C2 470uF/25V
C3 470uF/25V
C4 100nF
U1 NCP5501DT50RKG
Vin
Vout
5VSup
C1 4u7/10V
C15 100nF
R8 47K
D2 BAT54S
D1 PMEG2005CT
USB_5V
C17 1nF
C5 100nF
M1 IT-IM130731001
IN+
OUT+
IN-
OUT-
L2
FB
Vadc
Vmains
U2 ULN2003ADR
COM
HeaterLed
FanLed
Buzzer
Spare
CaseFan
Heater
OvenFan
R1 390R
R7 390R
HeaterLedb
FanLedb
HeaterLedr
FanLedr
H1
LEDs
BZ1
Buzzerb
Spareb
Case Fan
TB2
CaseFanb
R9 DNP
Sparer
Auxiliary
R10 10K
R11 10K
D3
D4
TB3
OvenFanb
Heaterb
SSDs
LCD1
LCD-XC-4617
Vss
Vdd
V0
RS-SS
R/W/Sin
E/Sclk
DB0
DB1
DB2
DB3
DB4
DB5
DB6
DB7
PSB
N/C
RST
Vout
A
K
U3
74HCT157N
GND
VCC
SCKb
MOSIb
L_CSb
SCK
MOSI
L_CS*
C7 100nF
LCD1a
U4
MK20DX128VLF5
C6 2u2F
USB_DP
USB_DM
ADC0_DP0
ADC0_DM0
C9 2u2F/6V
Vref
Xtal32
Extal32
SWD_CLK
SWD_Rx
SWD_Tx
SWD_DIO
EZP_CSb
C12 100nF
C13 100nF
HeaterLed
T2_CS*
T1_CS*
T3_CS*
MISO
FanLed
Buzzer
Spare
CaseFan
Heater
OvenFan
PTB17_TP1
SW_S
SW_F1
SW_F2
SW_F3
SW_F4
RESETb
EXTAL
XTAL
Y1 ABM3B-8.000MHZ-B2-T
U5 MAX31855KASA+T
C8 100nF
SO
SCK
CS*
Vcc
Gnd
T+
T-
T1+
T1-
C10 10nF
Therm #1
TB4
U6 MAX31855KASA+T
C11 100nF
T2+
T2-
C14 10nF
Therm #2
H3
Expansion
R14 100R
R12 33R
R13 33R
USB_DMb
USB_DPb
USB_DM
USB_DP
USB_Gnd
L3
FB
GND1
GND2
P1
SWD2X5
VTref
Gnd
Key
GndDet
SDWIO
SWDCLK
SWO/EXTa
NC/EXTb
nRESET
EZP_CSlb
L5
EZP_CSb
EZP_CLK
EZP_DO
EZP_DI
open source hardware
Title
T-962a Oven Controller
Size
A4
Number
Revision
V1.0
Date: 5/10/2016
Sheet of
File: C:\Users\..\T962a-P1.SchDoc
Drawn By:

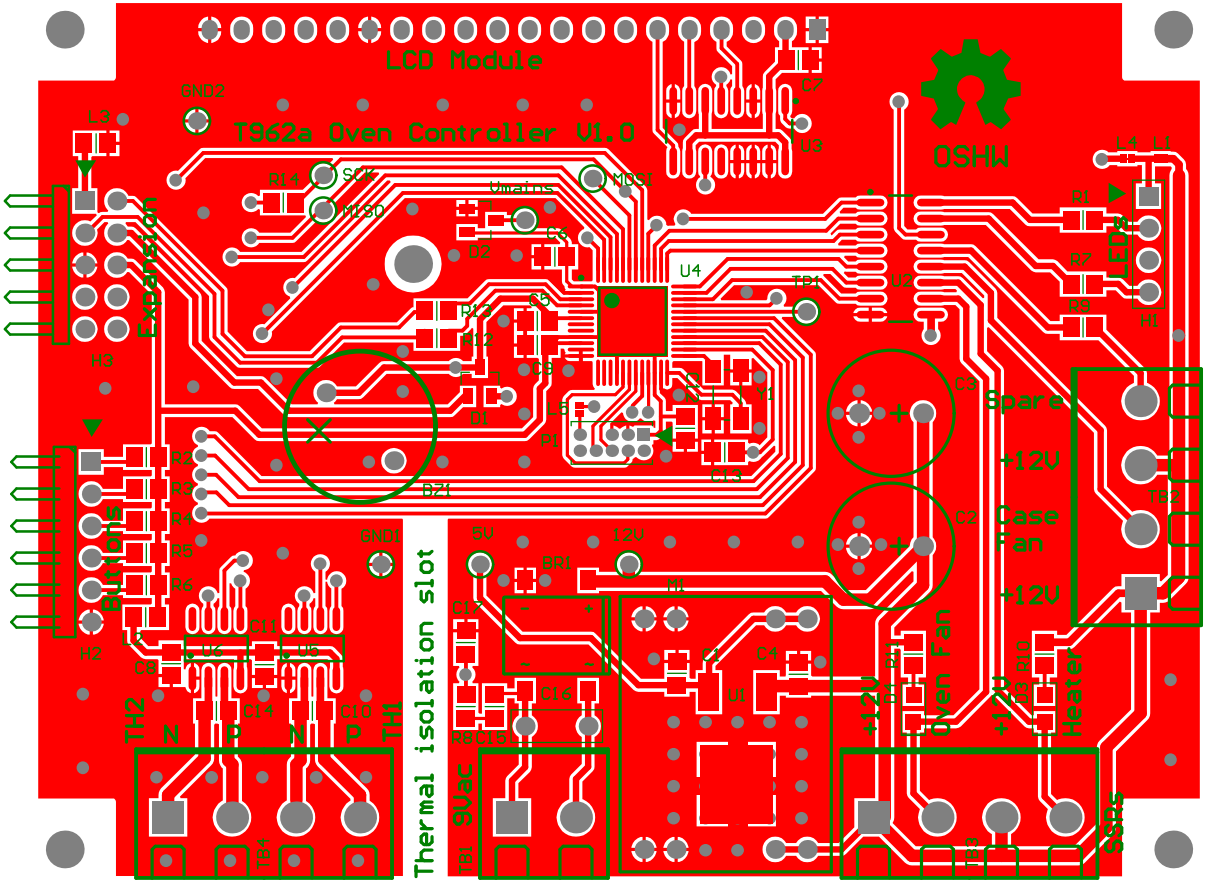
LCD Module
TS62a Oven Controller V1.0
OSHW
Expansion
Buttons
Thermal isolation slot
5Vac
SSRs
Oven Fan
Heater
Case Fan
Spare
+12V
LEDs
Mains
SCK
MISO
MOSI
GND2
GND1
5V
12V
TH2
TH1
N
P
U4
U2
U3
U1
Y1
B1
B2
TB1
TB2
TB3
TB4
H1
H2
H3
H4
L1
L3
L4
R1
R2
R3
R4
R5
R6
R7
R8
R9
R10
R11
R12
R13
R14
C1
C2
C3
C4
C5
C6
C7
C8
C9
C10
C11
C12
C13
C14
C15
D1
D2
D3
D4
D5
D6
D7
D8
D9
D10
D11
D12
D13
D14
D15
D16
D17
D18
D19
D20
D21
D22
D23
D24
D25
D26
D27
D28
D29
D30
D31
D32
D33
D34
D35
D36
D37
D38
D39
D40

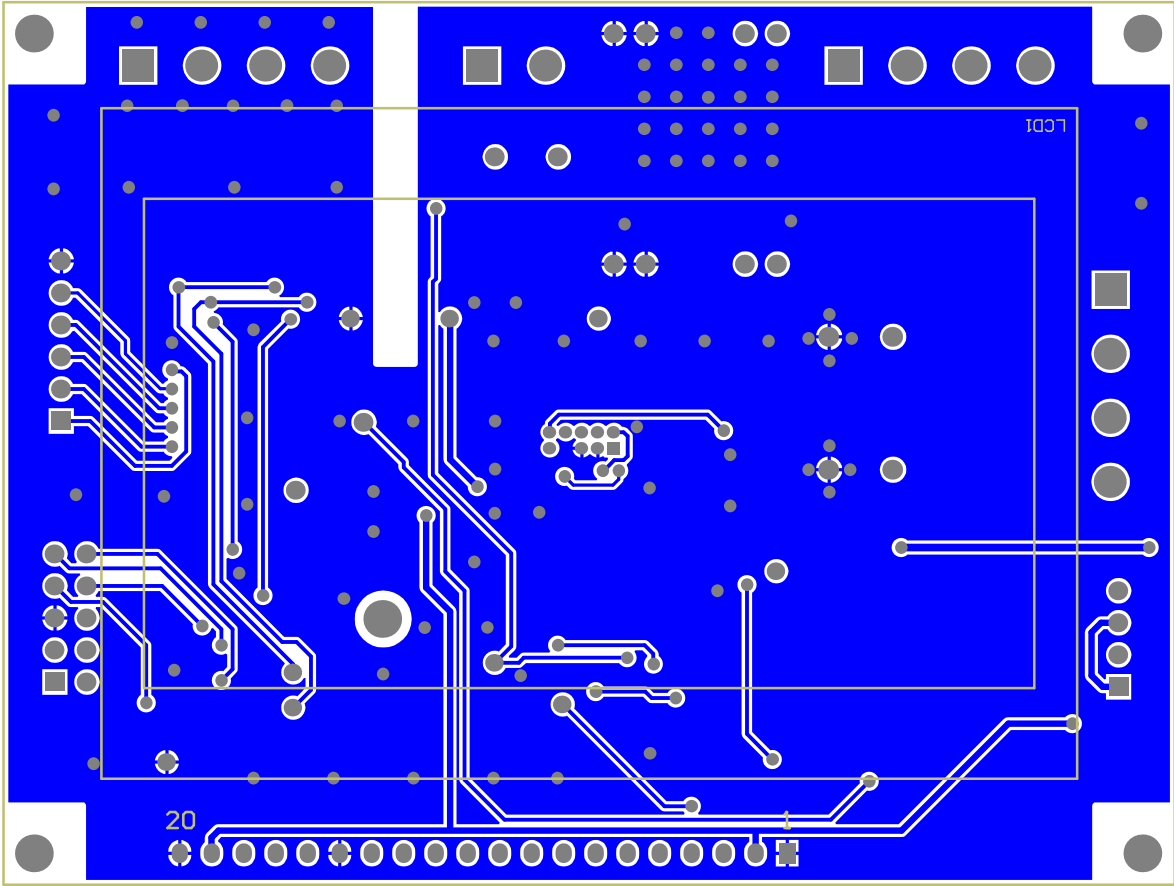
LCD1
20
1

Bill of Materials

T-962a Oven Controller

Source Data From:		**T962a.PrjPCB**
Project:		**T962a.PrjPCB**
Variant:		**None**
Creation Date:	5/10/2016	1:25:06 AM
Print Date:	05-Oct-16	1:25:17 AM

Footprint	Comment	Farnell PN	Digikey	Designator	Description	Quantity
PCBPIN - 0.9mm	TP			5V, 12V, GND1, GND2, MISO, MOSI, SCK, TP1, Vmains	Test Point	9
Bridge-SMT	DF10S	2101164		BR1	bRIDGE rECTIFIER	1
BUZZER_Small	Buzzer_PCB			BZ1	Buzzer (Adafruit 1536)	1
CCNP2012-0805	4u7/10V			C1	Capacitor SMT 0805	1
RB5/10x13mm	470uF/25V	2469425		C2, C3	Polarized Capacitor	2
CCNP2012-0805	100nF			C4, C5, C7, C8, C11, C12, C13, C15	Capacitor, Capacitor, Capacitor, Capacitor SMT 0805, Capacitor SMT 0805, Capacitor, Capacitor SMT 0805, Capacitor	8
CCNP2012-0805	2u2F			C6	Capacitor	1
CCNP2012-0805	2u2F/6V			C9	Capacitor	1
CCNP2012-0805	10nF			C10, C14	Capacitor SMT 0805	2
CAP - small MKT	100nF/63Vac	2429336		C16	Capacitor	1
CCNP2012-0805	1nF			C17	Capacitor	1
SOT23	PMEG2005CT	2459194		D1	Dual Schottky Diode (SMT)	1
SOT23	BAT54S	F1467519		D2	Dual Diode (SMT)	1
LED-SMT-2	LED Red	5790839		D3, D4	LED (Red SMT)	2
HDR1X4S	Header 1x4			H1	Header, 5-Pin, Right Angle	1
HDR1X6H	Keyboard			H2	Header, 6-Pin	1
HDR2X5H	2x5 Header			H3	Header 2x5	1
CR2012-0805	FB	1515661		L2, L3	Ferrite Bead (0805) 0.045OHM, 2A	2
LCD_XC-4617	LCD-XC-4617			LCD1	LCD 128 x 64 pixel, ST7920 controller & contrast pot (Jaycar XC-4617)	1
IT-IM130731001	IT-IM130731001			M1	Itead Buck converter	1
SWD-2x5	SWD2X5			P1	SWD Connector 2x5-Pin	1
CR2012-0805	390R			R1, R7	Resistor	2
CR2012-0805	4K7			R2, R3, R4, R5, R6	Resistor	5
CR2012-0805	47K			R8	Resistor	1
CR2012-0805	DNP			R9	Resistor	1
CR2012-0805	10K			R10, R11	Resistor	2
CR2012-0805	33R			R12, R13	Resistor	2
CR2012-0805	100R			R14	Resistor	1
MOLEX-39544-3002	Terminal2	2396251		TB1	MULTICOMP MC24366 Wire-To-Board Terminal Block	1
MOLEX-39544-3004	Terminal4	1624302		TB2, TB3, TB4	MULTICOMP MC24368 Wire-To-Board Terminal Block	3
TO-252	NCP5501DT50RKG	2532866		U1	Fixed LDO Voltage Regulator, 2.5V-16V in, 230mV Dropout, 5V/500mA out, TO-252-3	1
SO-16_N	ULN2003ADR	1470513		U2		1
SO-16_N	74HCT157N			U3	Quad 2-1 Multiplexor	1
TSQFP50P900X900-48M	MK20DX128VLF5			U4	Arm Cortex M4	1
SO-8_L	MAX31855KASA+T	2515622		U5, U6		2
Crystal_SMT - ABM3B	ABM3B-8.000MHZ-B2-T	2467818		Y1	Crystal 8MHz (MINIATURE SMT ABM3B)	1
						65

Approved **Notes**