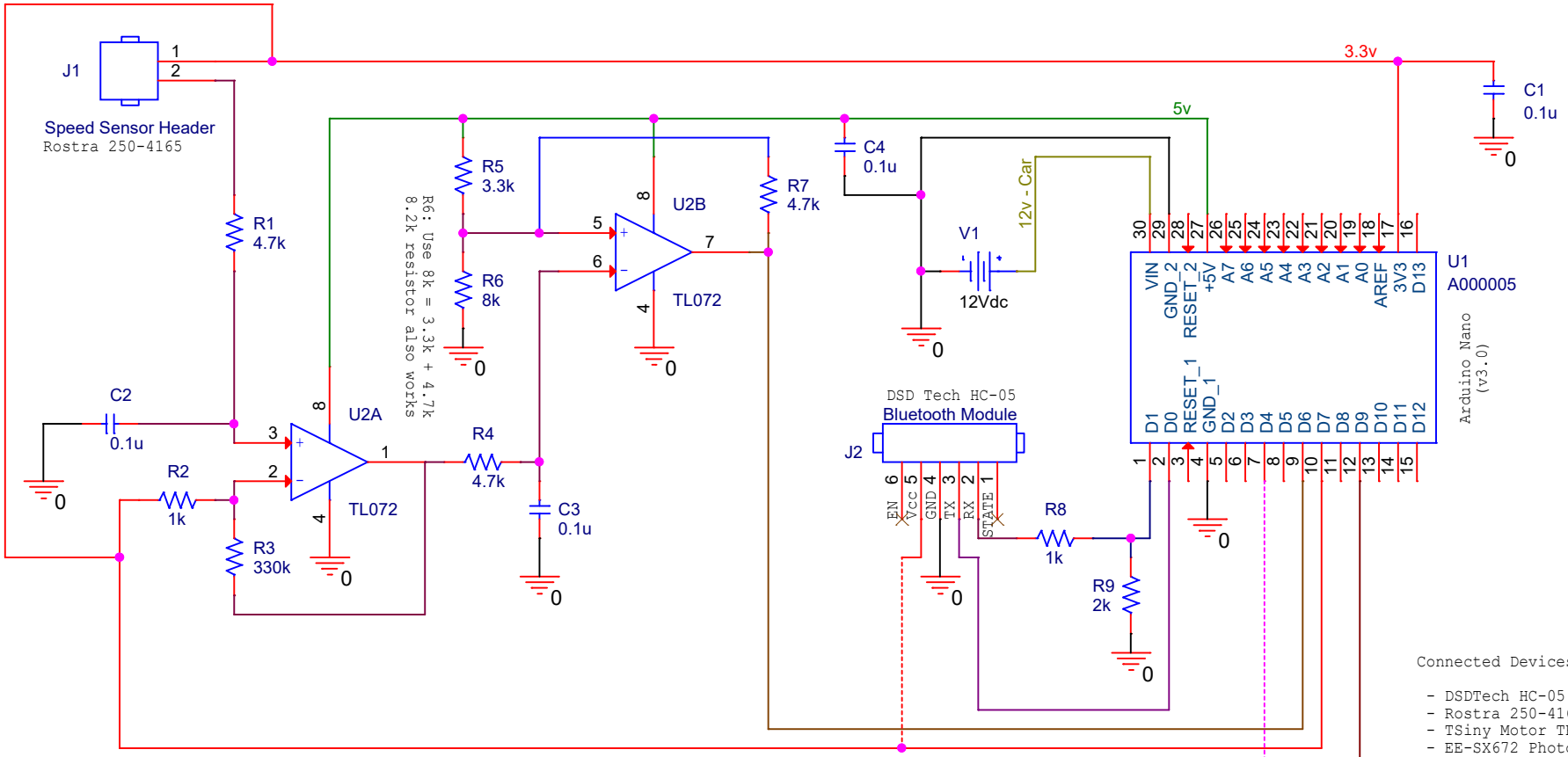

Connected Devices:

- DSDTech HC-05
- Rostra 250-4165
- TSiny Motor TRS-775W
- EE-SX672 Photo Interrupter *

* Buy the photo interrupter at adafruit.com ($ 2.95). It is much more expensive ($ 20.00+) elsewhere.

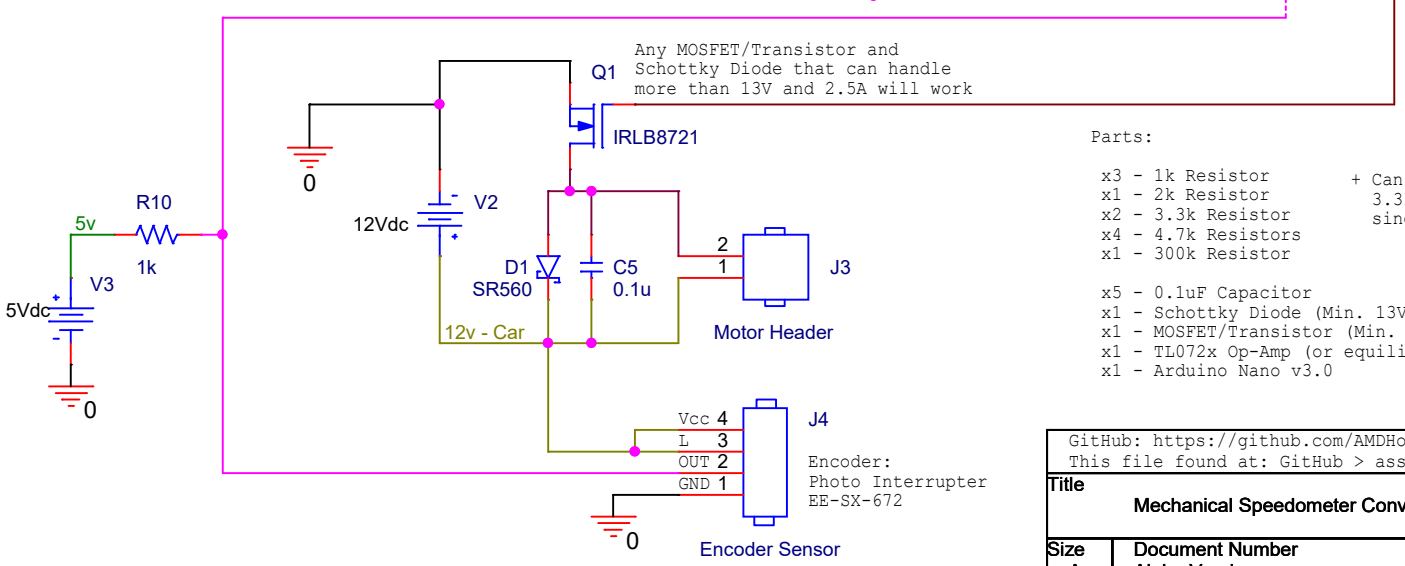

Parts:

x3 - 1k Resistor
x1 - 2k Resistor
x2 - 3.3k Resistor
x4 - 4.7k Resistors
x1 - 300k Resistor

+ Can replace one 4.2k and one 3.3k resistor (tot 8k) for a single 8.2k resistor at R6

x5 - 0.1uF Capacitor
x1 - Schottky Diode (Min. 13V, 2.5A) [SR560]
x1 - MOSFET/Transistor (Min. 13V, 2.5A) [IRLB8721]
x1 - TL072x Op-Amp (or equilivent)
x1 - Arduino Nano v3.0

GitHub: https://github.com/AMDHome/Mechanical-Speedometer-Converter
This file found at: GitHub > assets > Schematics > Schematics.pdf

Title	Mechanical Speedometer Converter	
Size A	Document Number Alpha Version	Rev v1.05
Date: Friday, April 05, 2019	Sheet 1 of 1	