This document and all information and data herein or herewith are confedencial and propriertary property of<COMPANY NAME> and are not to be used, reproduced or disclosed in whole or in part by anyone without the written permission of<COMPANY NAME>

Tolerances exept where noted:
ISO 2768-1 (c), ISO 2768-2 (K) & ISO 13920 BF

REV.	DESCRIPTION OF REVISION	CHECKER	APPROVER	DATE/SIGN.
A	ISSUED FOR PRODUCTION	19.05.2024	19.05.2024	19.05.2024/TLS

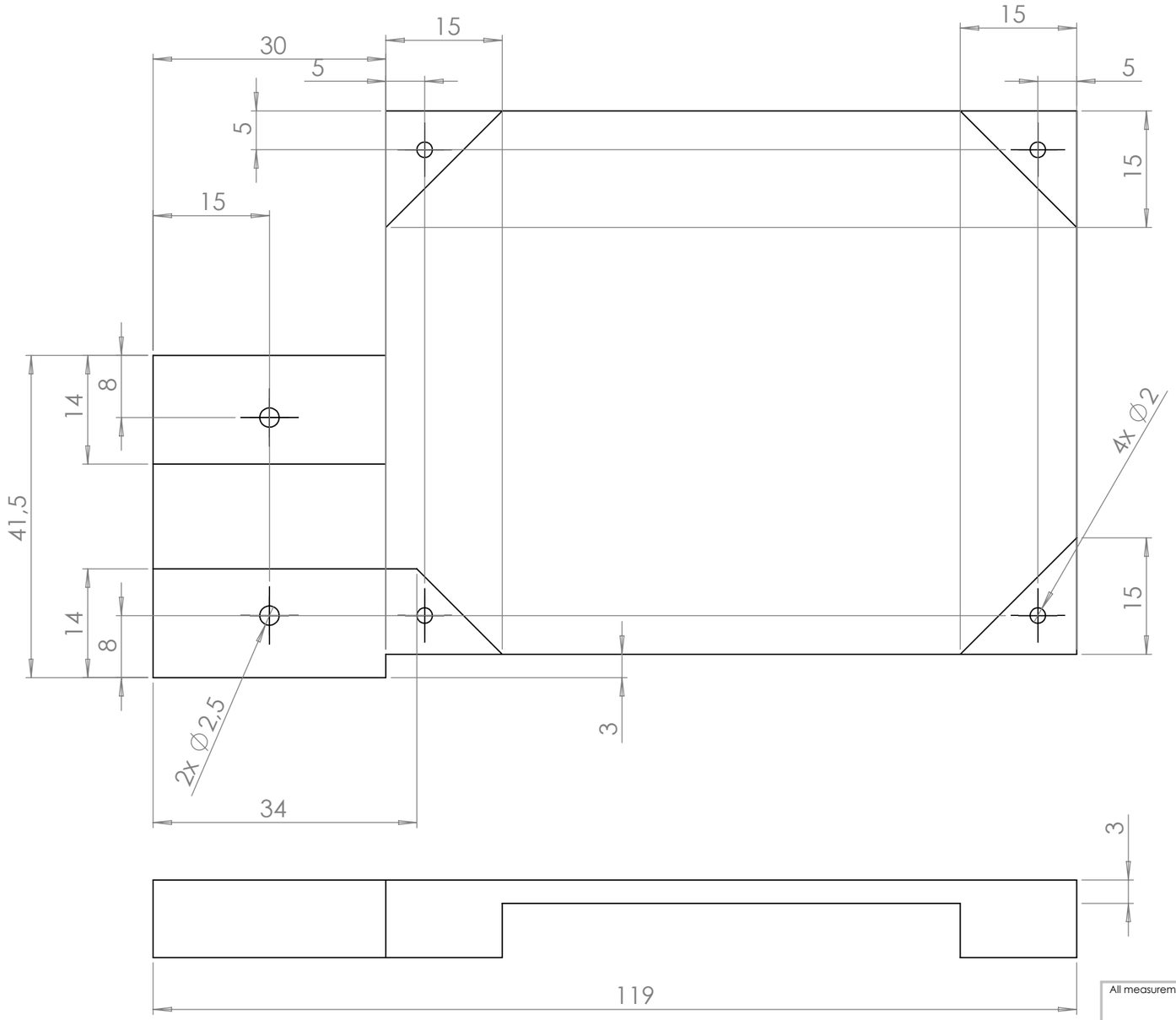

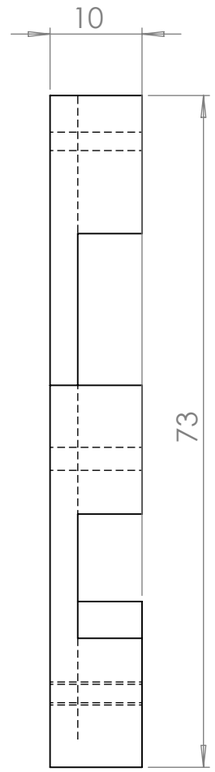

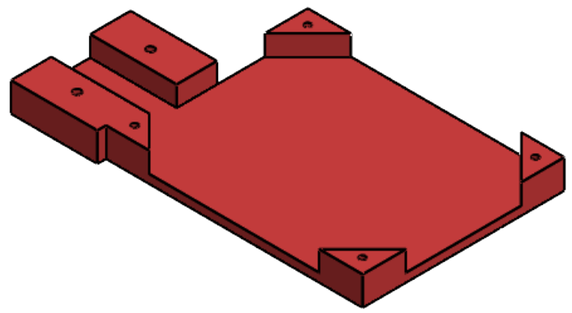

All measurements are in mm U.N.O.

Projection:

DO NOT SCALE DRAWING

REVISION: A

University of Agder

	NAME	SIGNATURE	DATE
DRAWN			
CHK'D			
APPV'D			
Q.A			

FINISH:
REPLACES:
REPLACED BY:

TITLE:
Card Holder

Specification:
PLA

WEIGHT: 0.04kg

DWG NO.
arena-3

A3

SCALE:1.5:1

SHEET 1 OF 1

SOLIDWORKS Educational Product. For Instructional Use Only.