Fox Plus Mechanical

Topic: Umbilical Connector

Andrew Robinson

KA3WDW

18Feb2026

FoxPlus-A Umbilical Concept

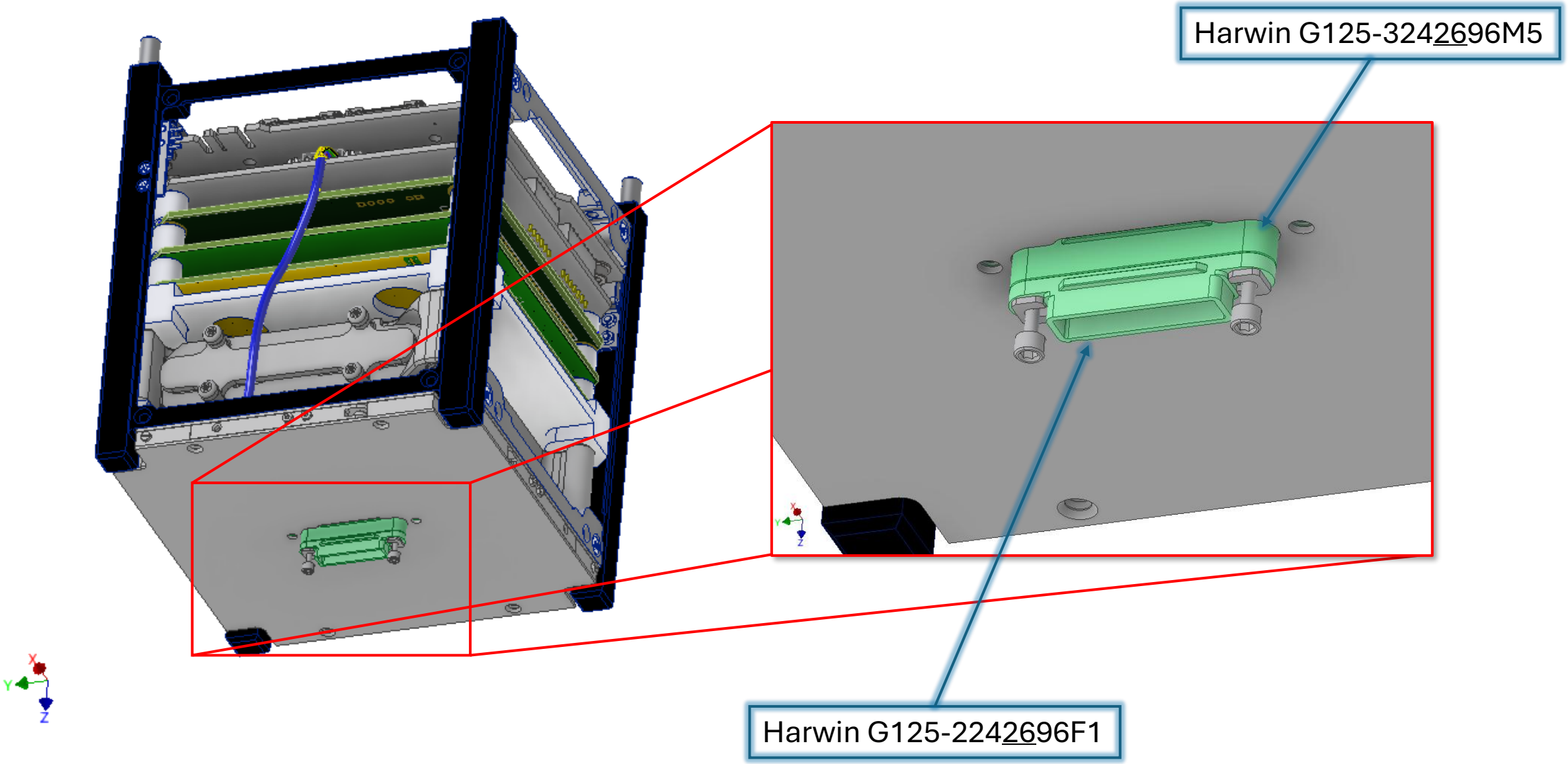

FoxPlus-A Umbilical Concept

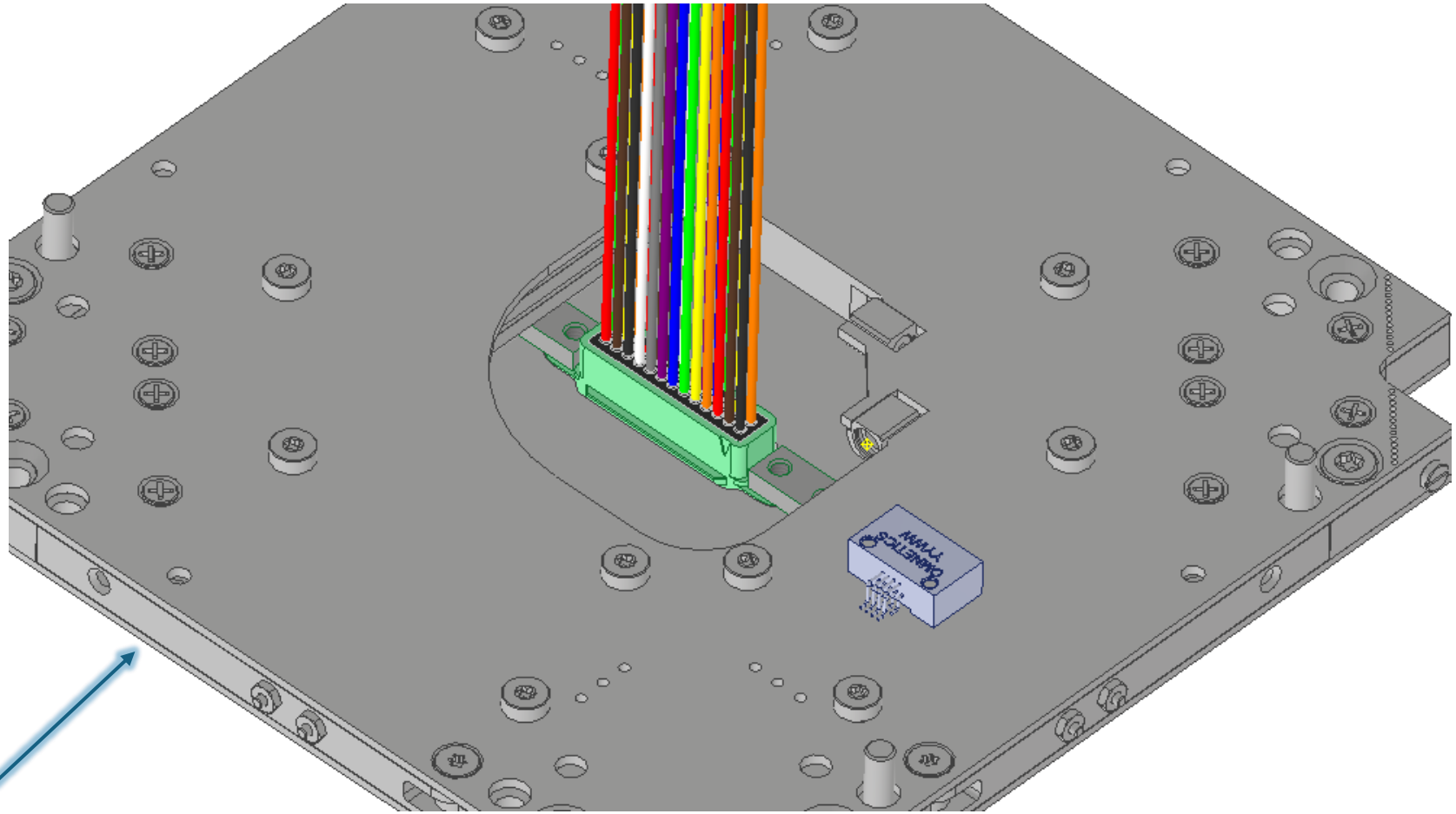

ISISpace AntS

Umbilical Connector +Z-Face Protrusion

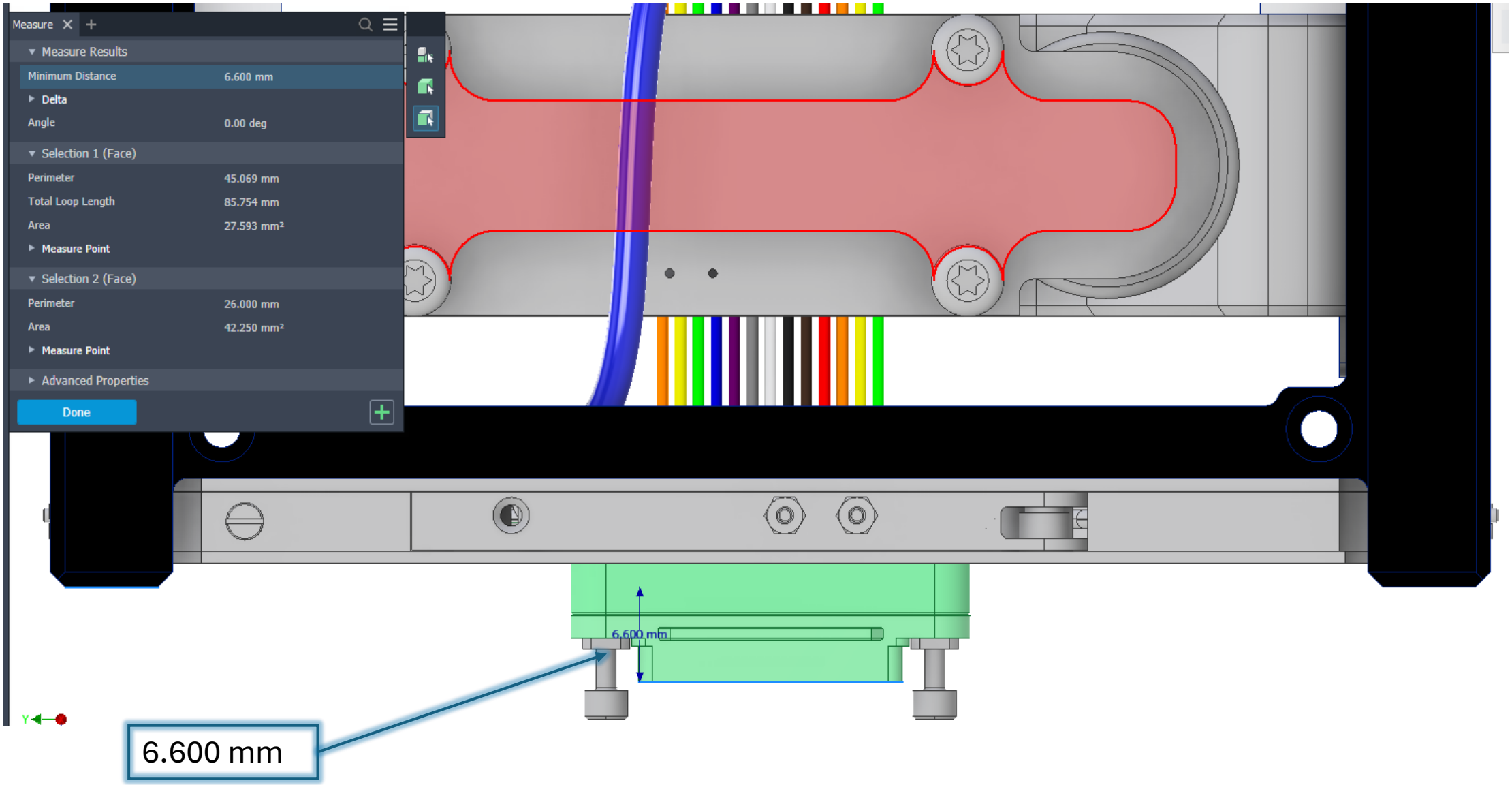

CubeSat Design Specification Rev. 14

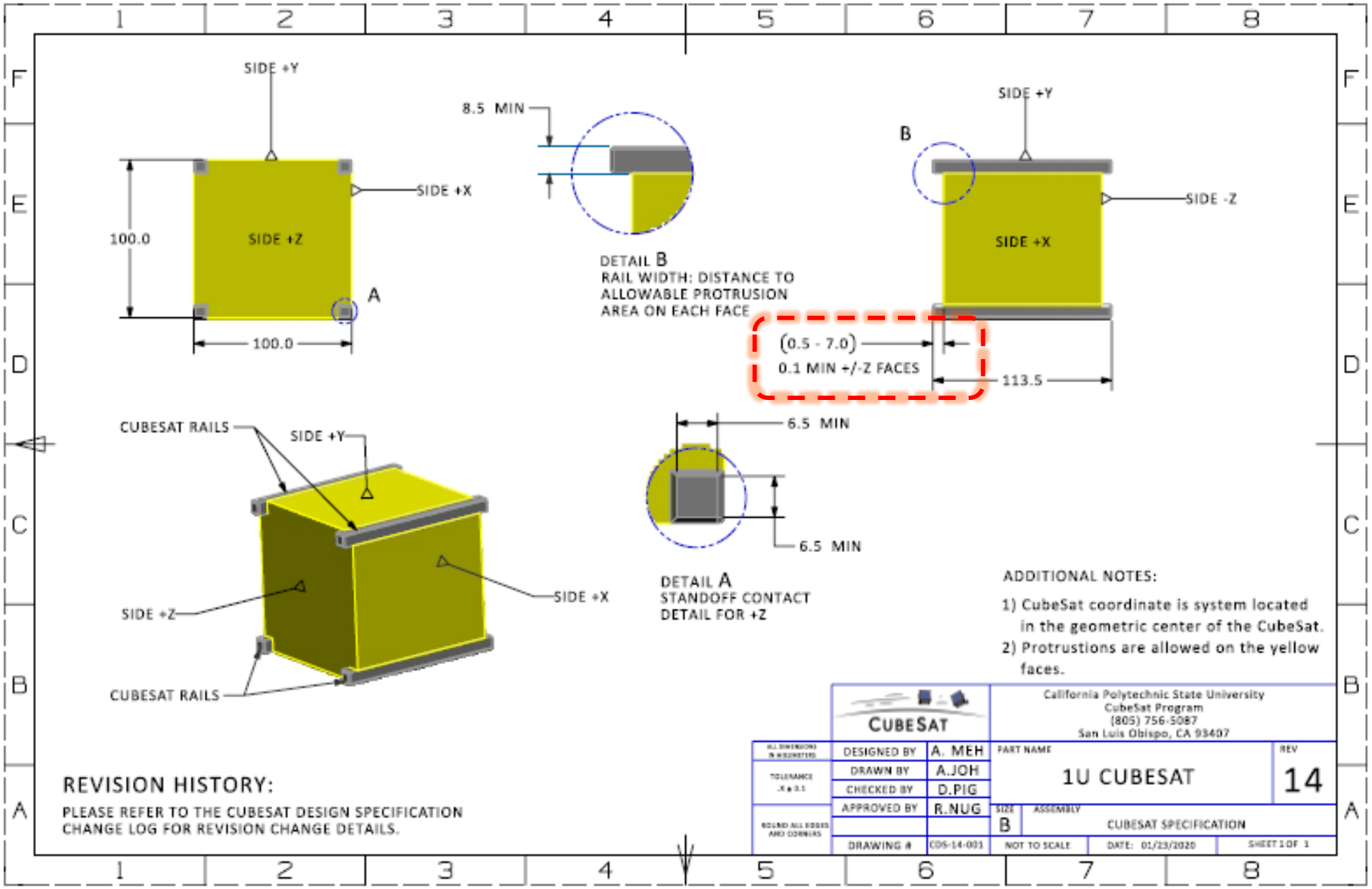

Optional Connector – 34 Pin

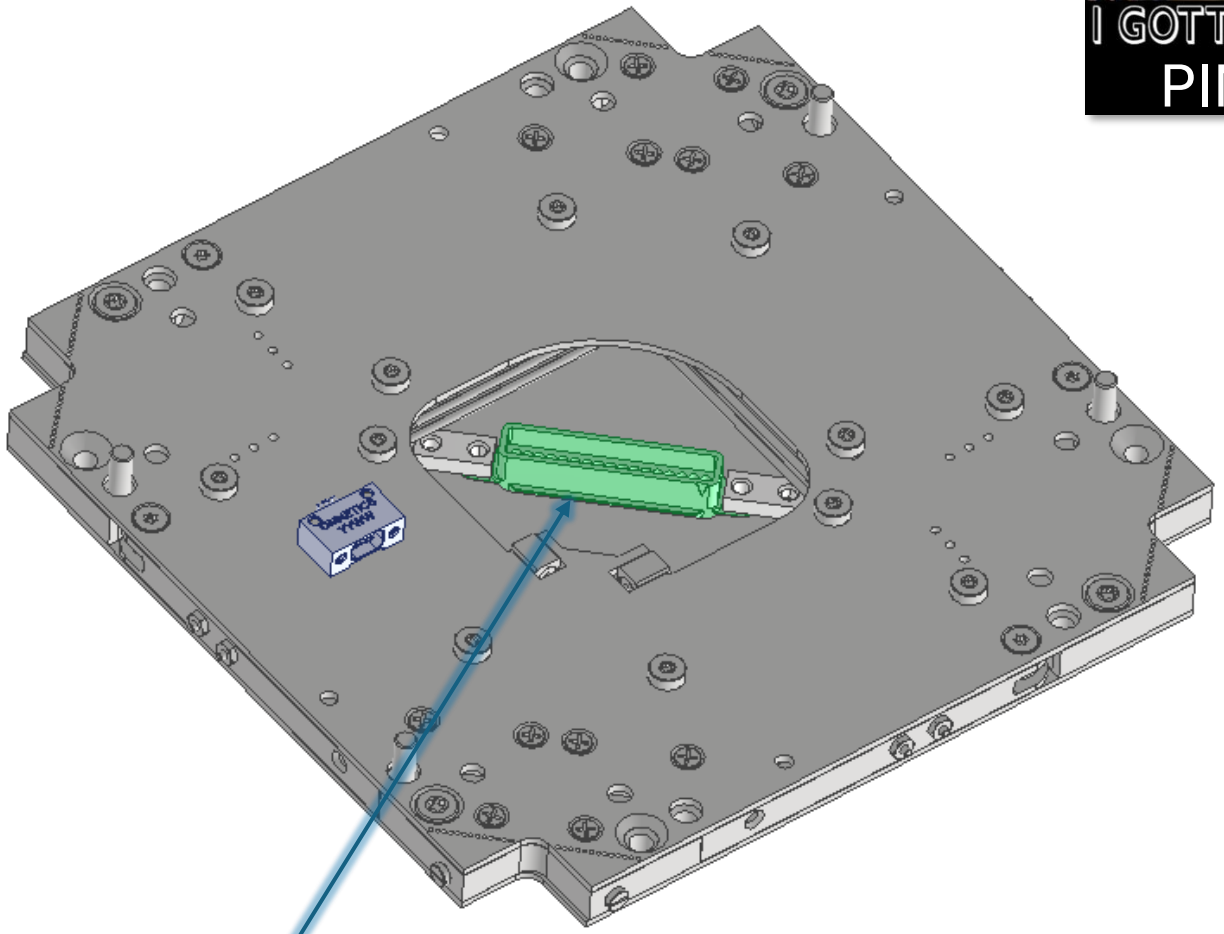

Harwin G125-3243496M5

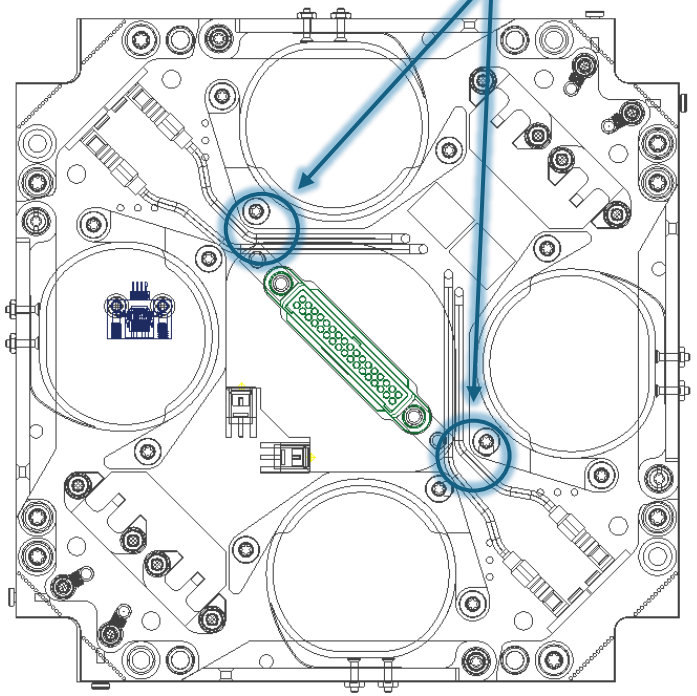

Minor interference