Adapter

File: Adapter.kicad_sch

Temp Sensor Sheet

File: TempSensor.kicad_sch

Revisions: Jim McCullers WA4CWI
Radio Amateur Satellite Corp (AMSAT)
FoxPlus-A
Mike Moore K4MVM

Sheet: /
File: PowerSigAdapter.kicad_sch

Title: ISIS Power Signal Adapter v1.2

Size: USLetter	Date: 2026-02-24	**Rev: rev 2**
KiCad E.D.A. 9.0.7		Id: 1/3

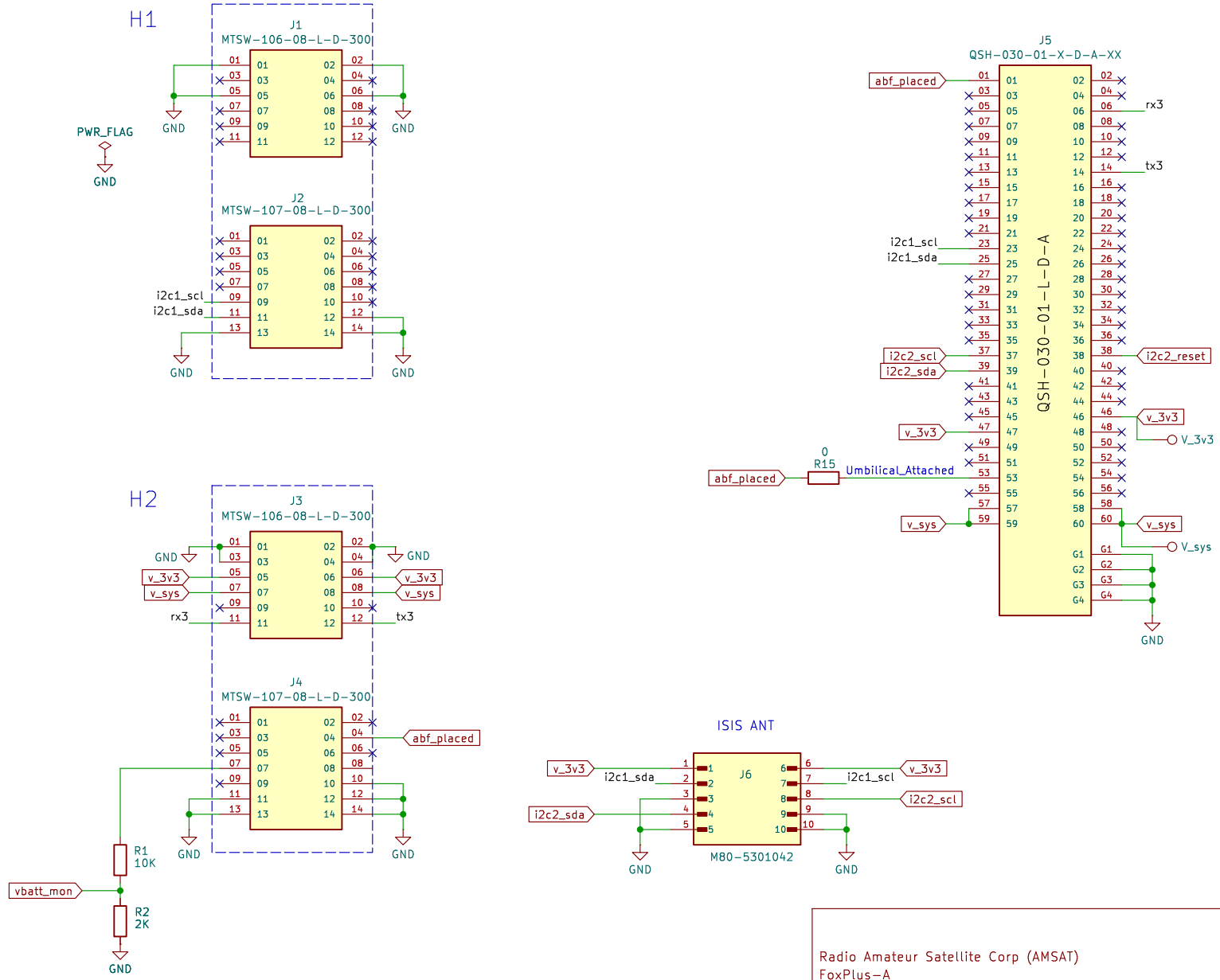

Radio Amateur Satellite Corp (AMSAT)
FoxPlus-A
Mike Moore K4MVM
Sheet: /Adapter/
File: Adapter.kicad_sch

Title: ISIS Power Signal Adapter v1.2

Size: USLetter	Date: 2026-02-24	**Rev: rev 2**
KiCad E.D.A. 9.0.7		Id: 2/3

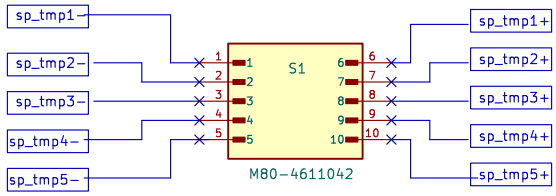

Matching plug for J7/J8 – Backside View – Information Only

1 Pair of Temp sensor wires (+/-) from each solar panel to female connector S1

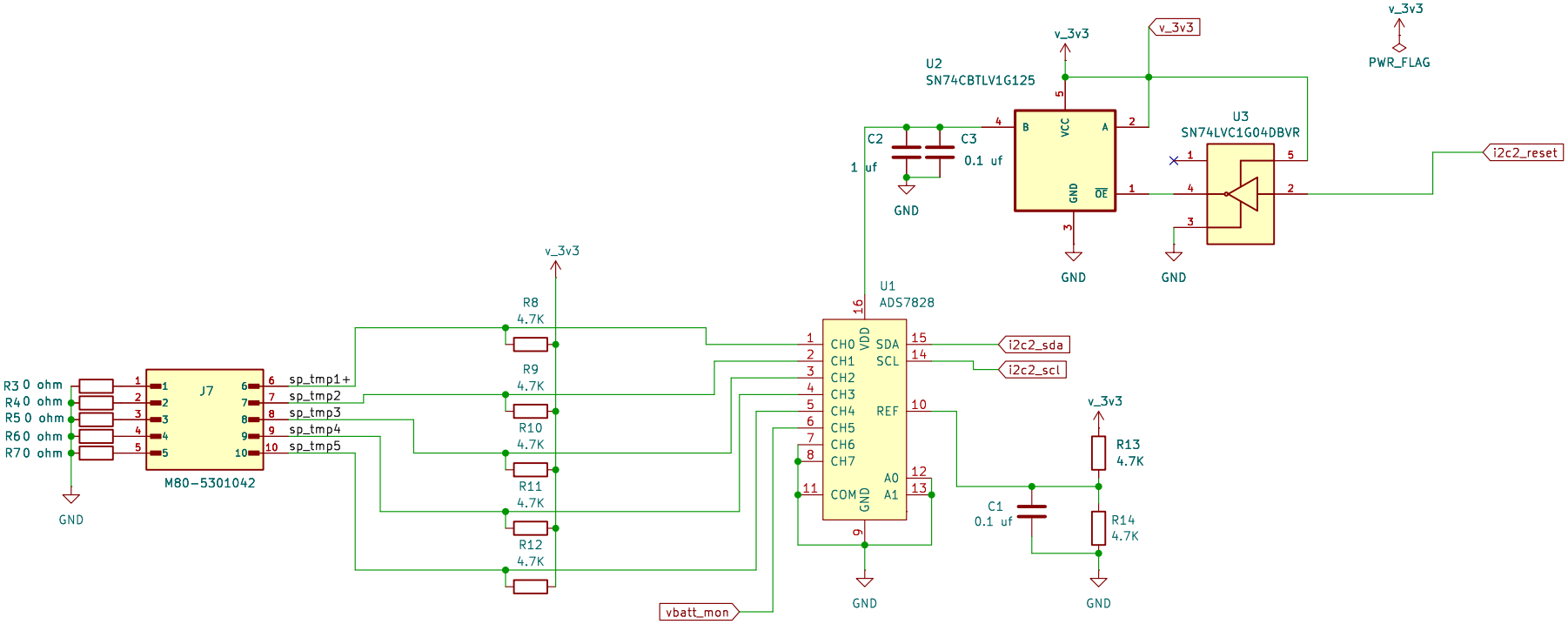

Radio Amateur Satellite Corp (AMSAT)
FoxPlus-A
Mike Moore K4MVM

Sheet: /Temp Sensor Sheet/
File: TempSensor.kicad_sch

Title: ISIS Power Signal Adapter v1.2

Size: USLetter	Date: 2026-02-24	**Rev: rev 2**
KiCad E.D.A. 9.0.7		Id: 3/3