REVISION HISTORY			
REV.	BY	DATE	APPROVED
1		06 MAR 06	ZL3JVX

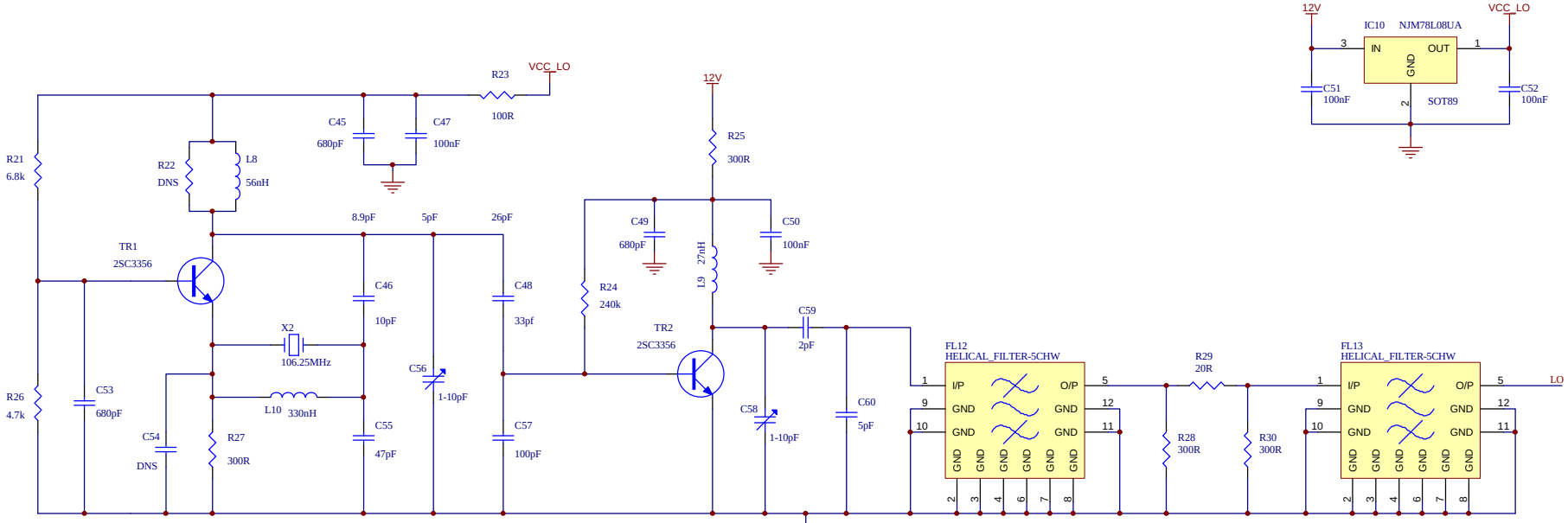

Traffic RX use 103.46125MHz = 435.245MHz RX

Command RX use 103.45625MHz = 435.225MHz RX

FOR SETUP, INJECT 103MHz INTO C51

ENSURE PEAK AT XTAL FREQ

AMSAT NEW ZEALAND	TITLE UHF FM Receiver Local Osc		
	DRAWING NUMBER 2006001-001	SHEET 3 OF 3	REVISION 1.0
		FILENAME UHF-FM-RX3.sch	