Rev	Author / Date	Comment
A00	S.Peacock 17 July 2004	Orcad Schematics transfered to Protel.

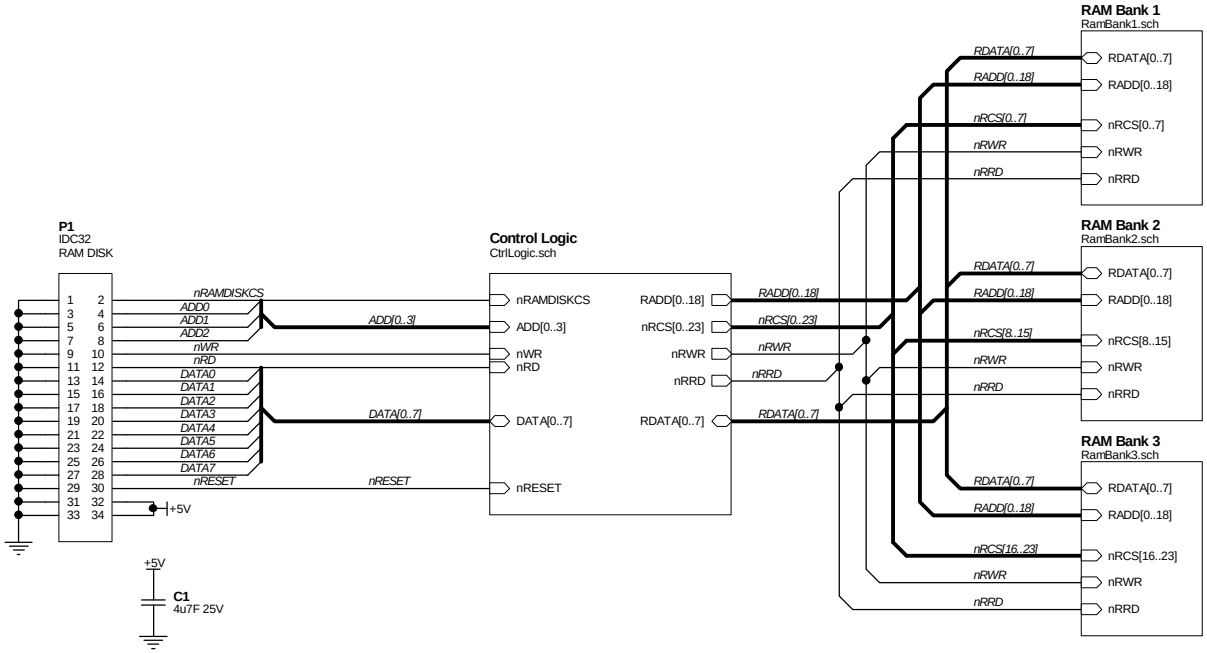

Logo

	Name	Date
Designed:		
Drawn:	S. Peacock	17 July 2004
Checked:		
Approved:		
PCB Rev:		

StarLite Design. S.Peacock
5 Countess Close
Maupuia
Wellington
New Zealand

KiwiSat. RAM Disk.

© 2003, StarLite Design.

Size.	Part No.	DWG No.	Rev.
A3		AMSATZL-2004031201	A00

File Name.
F:\Kiwi-sat\RamDisk.ddb - Documents\RamDiskOverview.Sch

Date & Time.
20-Jul-2004 22:07:48

Sheet.
1 of 5

Rev	Author / Date	Comment
A00	S.Peacock 17 July 2004	Orcad Schematics transfered to Protel.

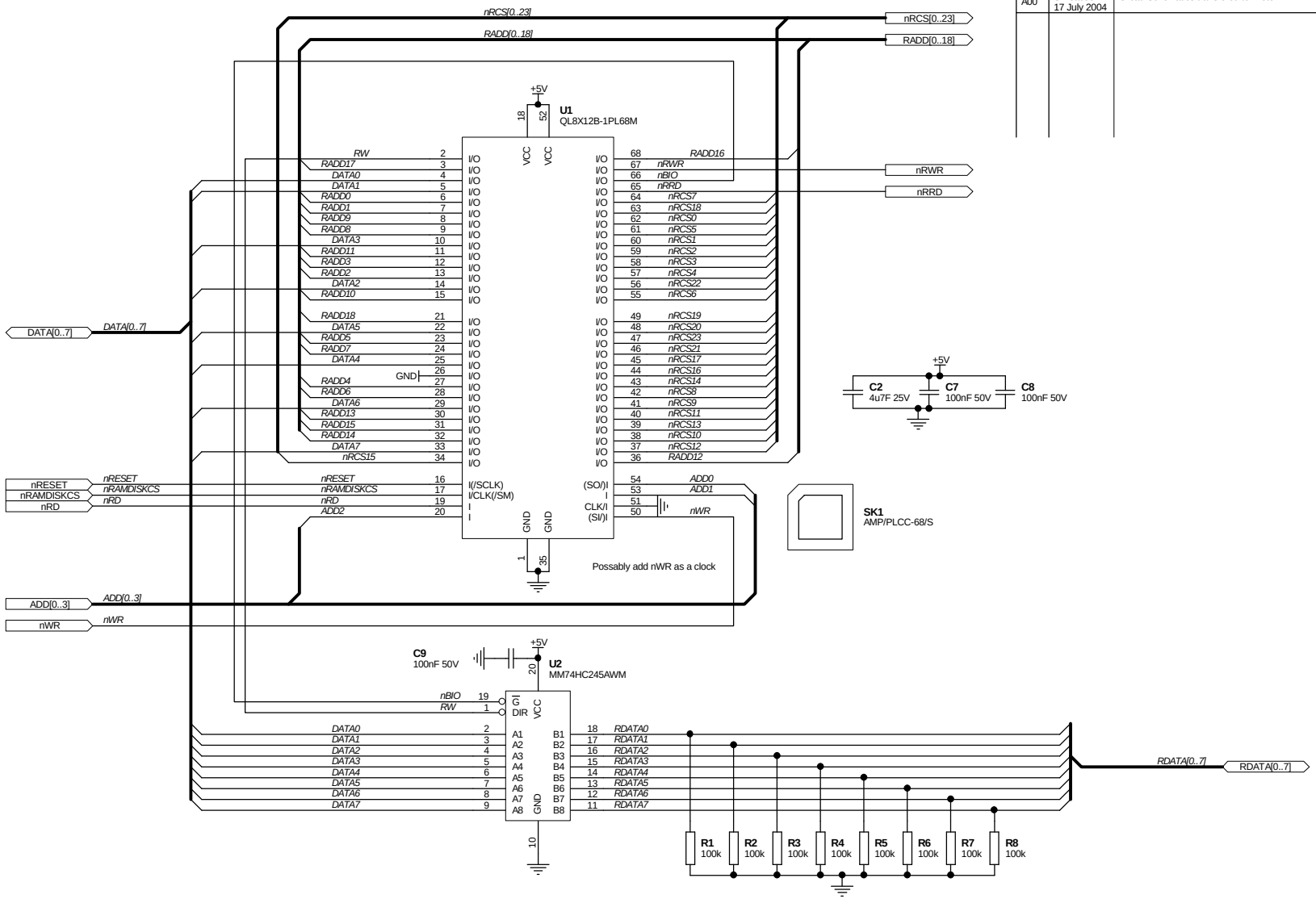

	Name	Date
Designed:		
Drawn:	S. Peacock	17 July 2004
Checked:		
Approved:		
PCB Rev:		

StarLite Design. S.Peacock
5 Countess Close
Maupuia
Wellington
New Zealand

KiwiSat. RAM Disk. Controller.

© 2003, StarLite Design.

Size.	Part No.	DWG No.	Rev.
A3		AMSATZL-2004031201	A00

File Name.	Date & Time.	Sheet.
F:\Kiwi-sat\RamDisk.ddb - Documents\CtrlLogic.sch	20-Jul-2004 22:07:48	2 of 5

Rev	Author / Date	Comment
A00	S.Peacock 17 July 2004	Orcad Schematics transfered to Protel.

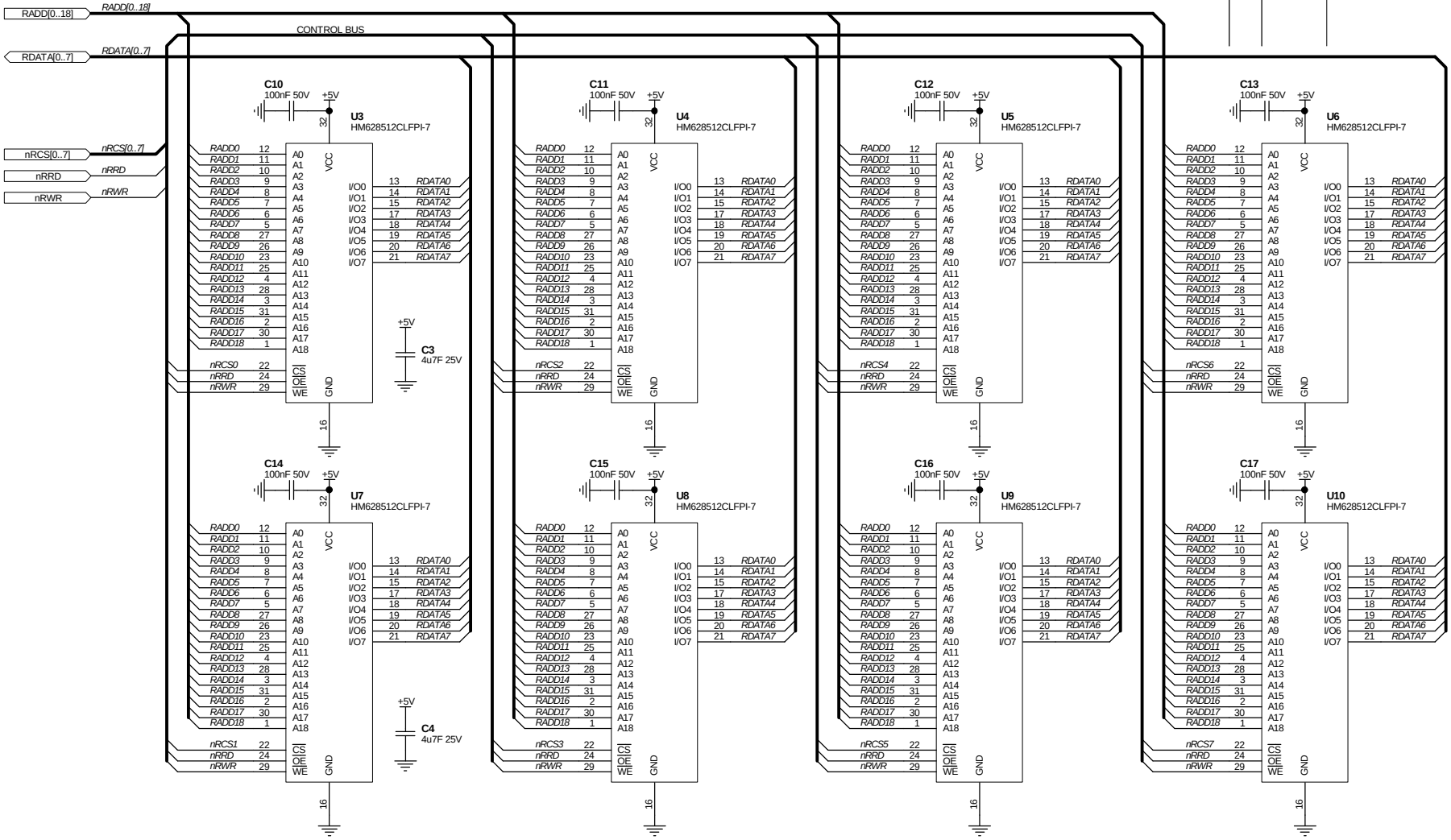

	Name	Date
Designed:		
Drawn:	S. Peacock	17 July 2004
Checked:		
Approved:		
PCB Rev:		

StarLite Design. S.Peacock
5 Countess Close
Maupuia
Wellington
New Zealand

KiwiSat. RAM Disk. RAM Bank 1.

© 2003, StarLite Design.

Size.	Part No.	DWG No.	Rev.
A3		AMSATZL-2004031201	A00

File Name. F:\Kiwi-sat\RamDisk.ddb - Documents\RamBank1.sch

Date & Time. 20-Jul-2004 22:07:49

Sheet. 3 of 5

Rev	Author / Date	Comment
A00	S.Peacock 17 July 2004	Orcad Schematics transfered to Protel.

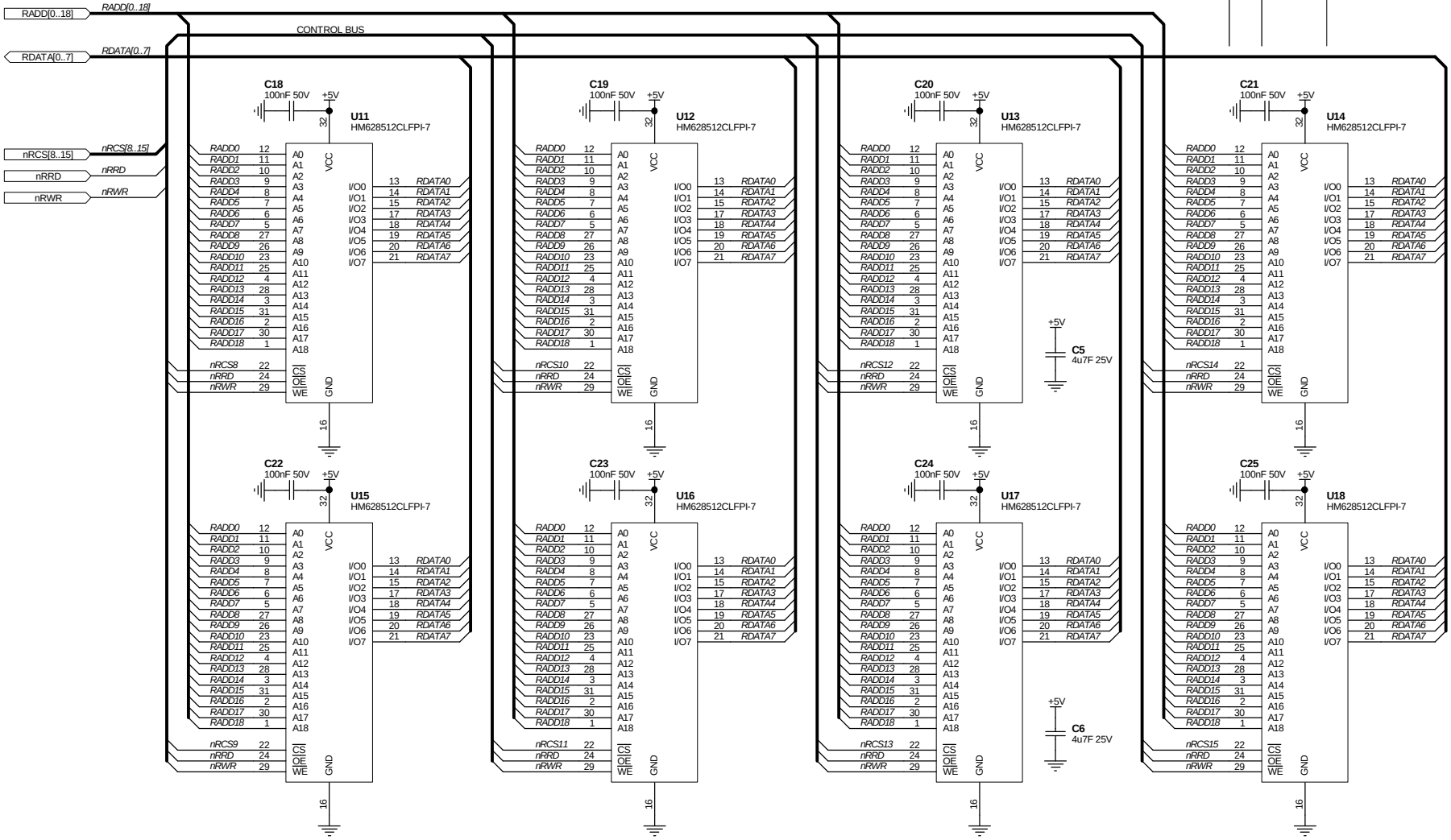

	Name	Date
Designed:		
Drawn:	S. Peacock	17 July 2004
Checked:		
Approved:		
PCB Rev:		

StarLite Design. S.Peacock
5 Countess Close
Maupuia
Wellington
New Zealand

KiwiSat. RAM Disk. RAM Bank 2.

© 2003, StarLite Design.

Size.	Part No.	DWG No.	Rev.
A3		AMSATZL-2004031201	A00

File Name. F:\Kiwi-sat\RamDisk.ddb - Documents\RamBank2.sch

Date & Time. 20-Jul-2004 22:07:49

Sheet. 4 of 5

Rev	Author / Date	Comment
A00	S.Peacock 17 July 2004	Orcad Schematics transfered to Protel.

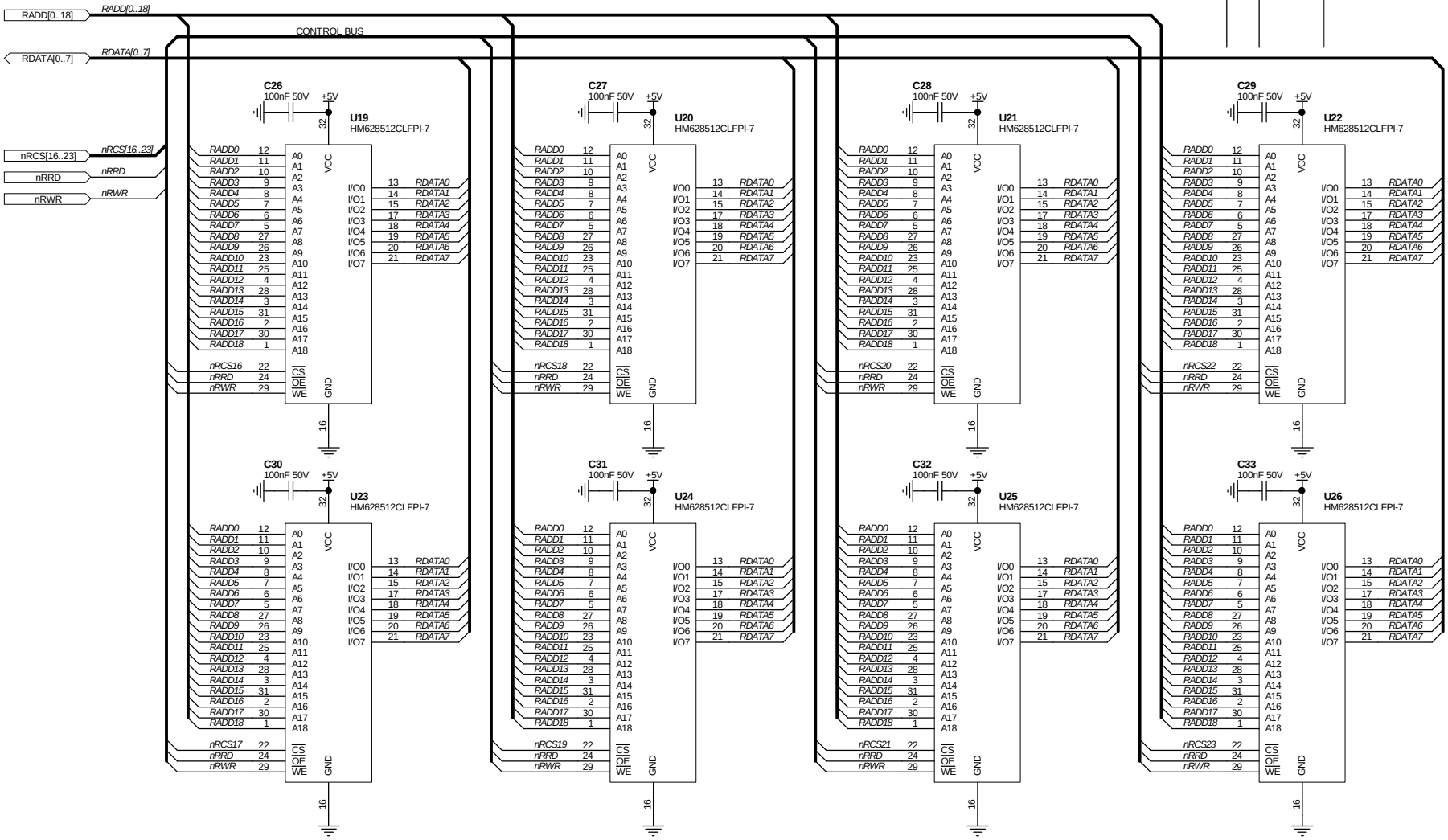

	Name	Date
Designed:		
Drawn:	S. Peacock	17 July 2004
Checked:		
Approved:		
PCB Rev:		

StarLite Design. S.Peacock
5 Countess Close
Maupuia
Wellington
New Zealand

KiwiSat. RAM Disk. RAM Bank 3.

© 2003, StarLite Design.

Size.	Part No.	DWG No.	Rev.
A3		AMSATZL-2004031201	A00

File Name.	Date & Time.	Sheet.
F:\Kiwi-sat\RamDisk.ddb - Documents\RamBank3.sch	20-Jul-2004 22:07:49	5 of 5