REVISION HISTORY			
REV.	BY	DATE	APPROVED
A		11 FEB 06	MARK A

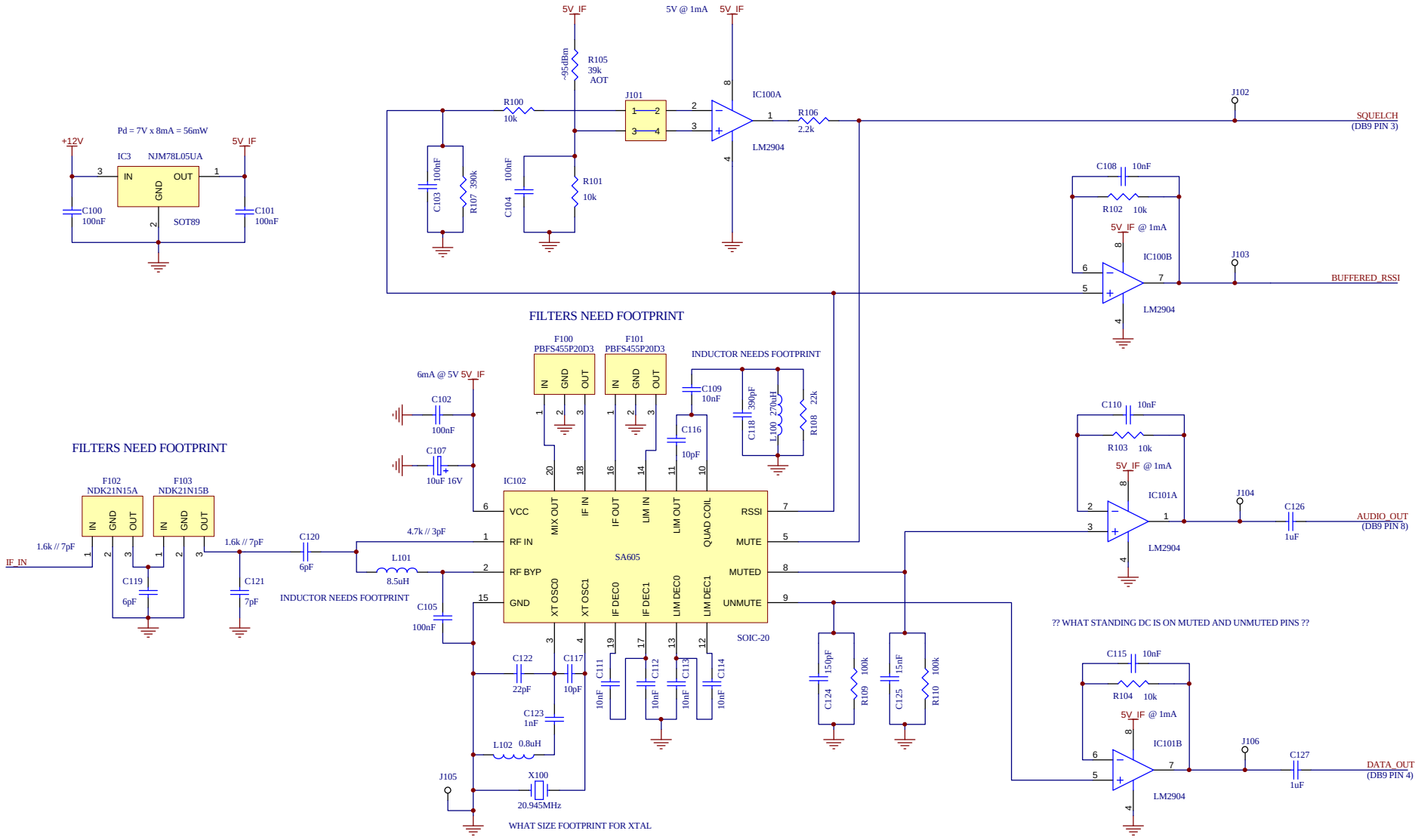

AMSAT NEW ZEALAND	TITLE UHF FM Receiver IF and FM		
	DRAWING NUMBER 2006001-001	SHEET 2 OF 3 FILENAME UHF-FM-RX2.sch	REVISION 1.0