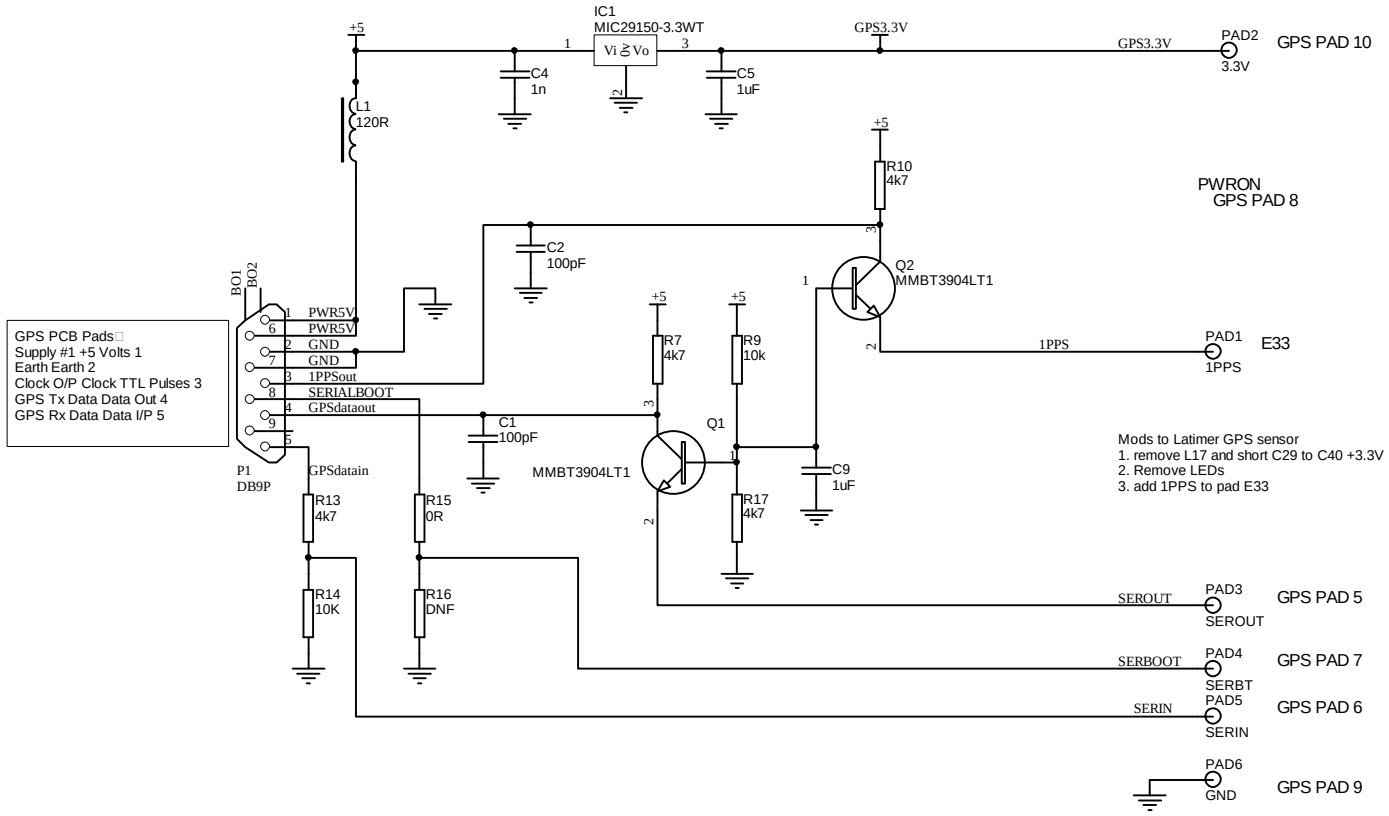


| | | | |
|---|---|---|---|
| Title | GPS Interface and Power regulator | | |
| Size A4 | Number | | Revision |
| Date: 26-Feb-2009 | | Sheet of | |
| File: D:\Breakin\Kiwisat\GPS\Interface\GPS interface.Sch | | Drawn By: | |