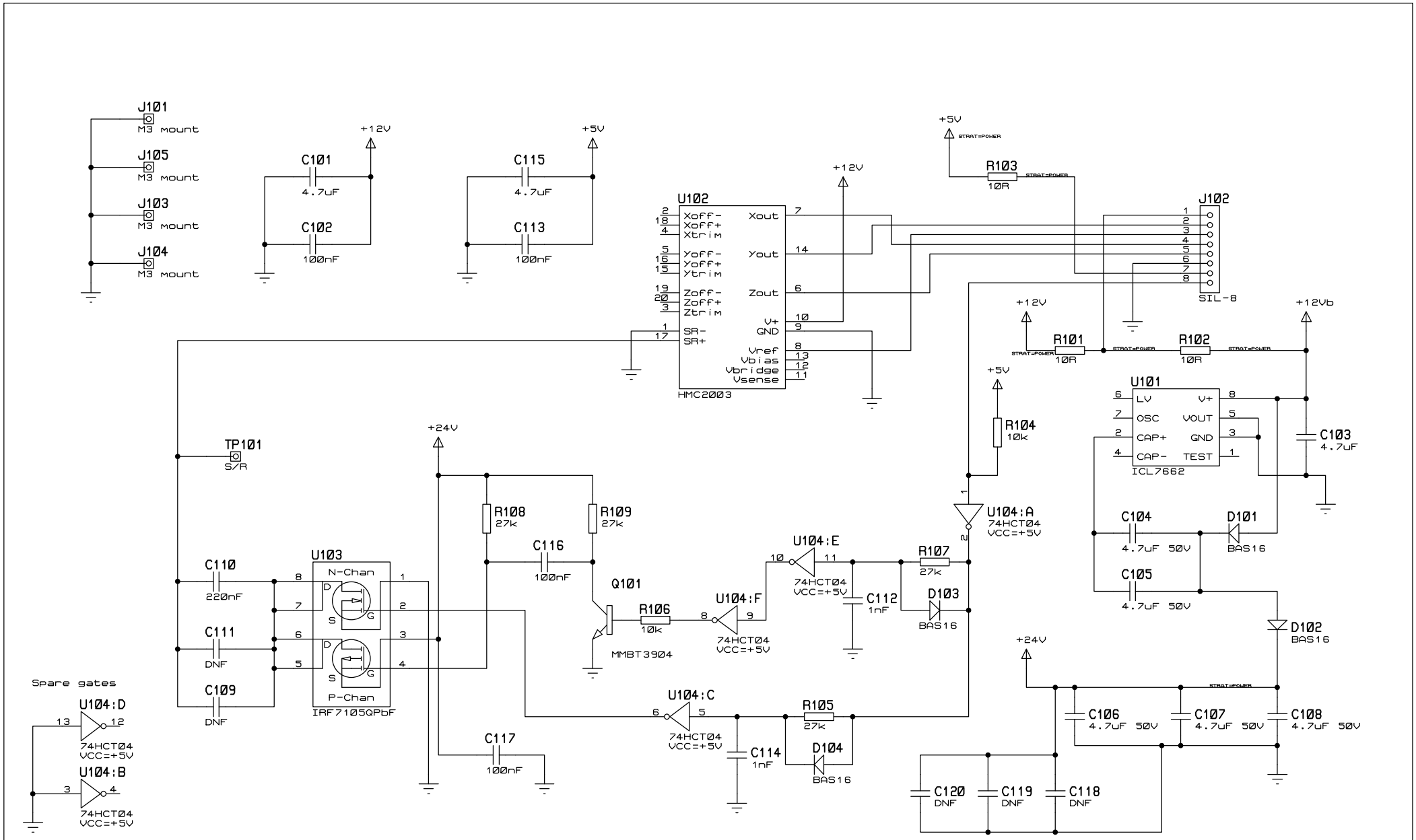

Possibly use 74HCT14 gates rather than 74HCT04 - determine after test

TITLE:	DATE:
Magnetometer	25/08/08
BY: Clayton Gumbrell REV:1.0	PAGE: 1/1