Peripheral Neural Activity Recording and Stimulation System

Daniela Loi, Caterina Carboni, Gianmarco Angius, Gian Nicola Angotzi, Massimo Barbaro, *Member, IEEE*, Luigi Raffo, *Member, IEEE*, Stanisa Raspopovic, and Xavier Navarro

***Abstract*—This paper presents a portable, embedded, microcontroller-based system for bidirectional communication (recording and stimulation) between an electrode, implanted in the peripheral nervous system, and a host computer. The device is able to record and digitize spontaneous and/or evoked neural activities and store them in data files on a PC. In addition, the system has the capability of providing electrical stimulation of peripheral nerves, injecting biphasic current pulses with programmable duration, intensity, and frequency. The recording system provides a highly selective band-pass filter from 800 Hz to 3 kHz, with a gain of 56 dB. The amplification range can be further extended to 96 dB with a variable gain amplifier. The proposed acquisition/stimulation circuitry has been successfully tested through *in vivo* measurements, implanting a tf-LIFE electrode in the sciatic nerve of a rat. Once implanted, the device showed an input referred noise of 0.83 μV_{rms}, was capable of recording signals below 10 μV, and generated muscle responses to injected stimuli. The results demonstrate the capability of processing and transmitting neural signals with very low distortion and with a power consumption lower than 1 W. A graphic, user-friendly interface has been developed to facilitate the configuration of the entire system, providing the possibility to activate stimulation and monitor recordings in real time.**

***Index Terms*—Bioelectronic device, extracellular recording, neural-electronic interface, neural stimulator.**

I. Introduction

THE introduction of new biocompatible materials and the recent developments in microelectronic technology have, in the last decades, made the design of implantable microfabricated systems possible, which guarantee a selective link with the peripheral nervous system (PNS) [1], [2]. Extracellular spike waveforms can be recorded with intraneural microelectrodes, from small clusters of motor and sensory neurons at a subfascicular level [3], [4]. Moreover, different research groups have demonstrated that through discrete stimulation of these cells and tissues, it is possible to provide feedback related to touch/pressure and joint position sense [5], [6]. These advances have propelled the field of neural prosthetics forward.

Recent results have demonstrated that prosthesis movements can be activated by information extracted from PNS with intrafascicular electrodes. In [7], four tf-LIFE electrodes ("thin-film Longitudinal Intra-Fascicular Electrode" [8], [9]) have been implanted and used in an amputee for several weeks, demonstrating a high success rate in picking up signals with a good signal-to-noise ratio (SNR) and excellent selectivity. Despite the excellent clinical results and the impressive demonstration of what is possible, this new generation of prosthesis is a long way from ideal. In the first place, accomplishing the tasks of: 1) acquisition of neural efferent signals; 2) decoding of the neural information into motor commands; and 3) generating stimulation signals to be injected in the afferent nervous paths requires the use of racks of commercially available electronic equipment. This equipment is cumbersome and bulky, making the positioning of the artificial limb on the amputee's stump impractical and the experimental session complex, noise prone, and fatigue for the patient. Second, the acquisition of PNS efferent neural activity requires accurate and optimized signal amplification and filtering which is not straightforward with general-purpose instrumentation. As reported in a few studies that focus on this topic, the signal captured from intrafascicular electrodes is very weak and prone to different interference sources [mainly due to the electromyographic signals (EMG)] [10]. In particular, neural signals appear as spikes with peak-to-peak amplitudes of about 20 μV, with a power spectrum lying between 500 Hz and 7 kHz, peaking at about 2 kHz [11]. EMG signals represent the most problematic interfering sources to cope with, since they have magnitudes in the order of millivolts and their frequency spectrum shows a peak power density between 100 and 300 Hz but can have energy beyond 1 kHz.

The miniaturization and optimization of electronics for neural activity stimulation and registration seems to be then, the new challenge. Attempts to solve this issue are based on two different approaches: 1) the realization of a custom integrated circuit (IC) or 2) the use of commercial-off-the-shelf (COTS) electronics. The first approach enables the realization of low noise and compact devices, combining low power consumption and small sizes [12]–[14] and is, therefore, more suitable for long-term implantation. Nevertheless, design time and prototyping costs are large

Manuscript received August 09, 2010; revised November 02, 2010, January 04, 2011; accepted February 20, 2011. Date of publication April 15, 2011; date of current version July 27, 2011. This work was supported in part by the European Community's Seventh Framework Programme (FP7/2007–2013) under Grant Agreement no. 248424, in part by the MADNESS Project, and in part by the Italian Ministry of Education, University and Research (MIUR) under Project Safehand (PRIN 2006). This paper was recommended by Associate Editor P. Mohseni.

D. Loi, C. Carboni, G. Angius, M. Barbaro, and L. Raffo are with the Department of Electrical and Electronic Engineering, University of Cagliari, Cagliari I-09123, Italy.

G. N. Angotzi is with the Department of Robotics, Brain, and Cognitive Sciences, Italian Institute of Technology, Genoa I-16130, Italy.

S. Raspopovic is with the Advanced Robotics Technology and System Laboratory, Scuola Superiore Sant'Anna, Pisa I-56127, Italy.

X. Navarro is with the Institute of Neurosciences and CIBERNED, Universitat Autònoma de Barcelona, Bellaterra E-08193, Spain.

Digital Object Identifier 10.1109/TBCAS.2011.2123097

1932-4545/$26.00 © 2011 IEEE

and the the custom device usually lacks flexibility and adaptability. The second approach, on the contrary, is a low-cost solution and has a rapid implementation time so it is suitable for short-term experiments, especially on animals. Moreover, since neural signal characteristics in terms of bandwidth and stimulation pulses amplitude are patient and electrode dependent, the possibility to easily modify the electronic configuration represents a great advantage in the first stages of research. Once that the terms of the problem are better known, a custom integrated circuit (IC) may be developed on more solid ground. The high reproducibility and the simple fabrication method offered by discrete component electronics have driven the authors to implement this solution

II. Motivation and Related Works

This paper deals with the design and the testing of an electronic neural system where a bidirectional link between the PNS and a computer is established for a preliminary assessment of the amplitude and the frequency bandwidth of neural signals, in view of the control of a smart artificial limb. The dimensions of the proposed device do not allow the integration in the prosthesis or the use in a chronic implant; however, it represents a useful compromise, in terms of dimensions and capabilities, between the traditional laboratory equipment and a completely implantable device. The proposed portable system could be used, both for recording and stimulation, in preliminary clinical trials with nonchronic implants simplifying the experiment setup and easing the connection of the patient to the control workstation.

Several works aimed at the realization of neural interfaces with discrete components have been presented, but many of them include only the recording module [15]–[18]. On the other hand, papers including the stimulation circuitry use a simple recording unit with low-order filters and single-ended signal paths [19]–[23]. Moreover, these discrete component systems focus on the study of the central nervous system (CNS). Hence, they are not only dedicated to the recording of the extracellular action potentials (EAPs) but also of the local field potentials (LFPs), which lie on a lower bandwidth that strongly overlaps the EMG interference [24]. This fact prevents these systems from being employed in peripheral recordings since the filter bandwidth would allow the EMG frequencies to pass, causing amplifier saturation. For what concerns the IC approach, many papers have been presented but the majority still aim to process cortical neural signals [12], [14], [25], [26], [24], [27]–[30]. Several ICs for PNS have also been developed [13], [31]–[34], but in most cases, they do not include the stimulation unit and focus on cuff electrodes. Furthermore, as already mentioned, IC circuits are impractical for a preliminary assessment of the neural signal characteristics, which is the aim of this paper. In the following text, we present the realized device and experimental results from *in vivo* peripheral recording sessions.

III. Neural System Architecture

The work described in this paper is part of a wider project, called SafeHand, funded within the PRIN initiative of the Italian Ministry of Education, University and Research (MIUR), aimed at realizing a neurally controlled prosthetic hand able that is able

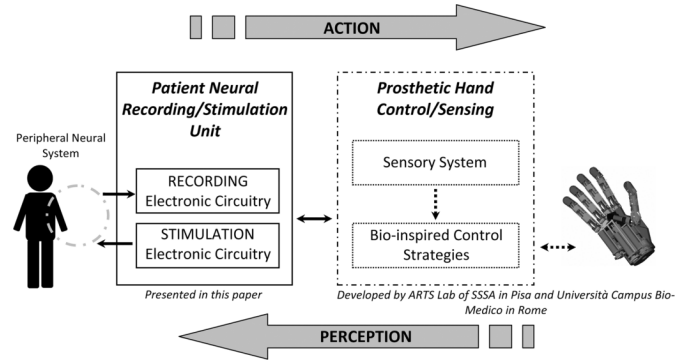

Fig. 1. Safehand project.

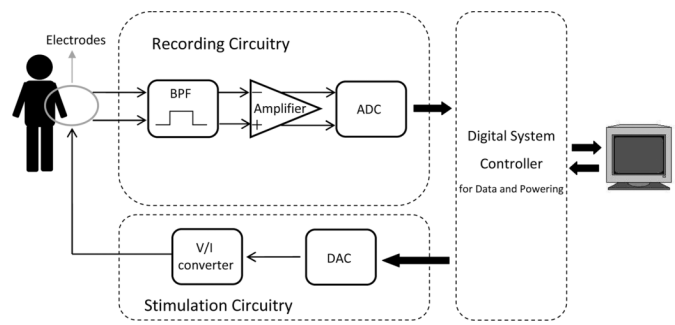

Fig. 2. Block diagram of the neural recording and stimulation system.

to provide appropriate, graded, and distally referred tactile and proprioceptive sensations to the wearer. In this way, the artificial hand would be intuitively controlled and felt by the amputee as the natural one.

To reach this aim, the platform shown in Fig. 1 was conceived. It consists of a recording and stimulation electronic system (present work), a biomechatronic prosthetic hand, and a bioinspired control system (developed at ARTS Lab, Scuola Superiore Sant'Anna, Pisa, Italy, and at Università Campus Biomedico, Rome, Italy). In this framework, special attention has been paid to the implementation of the electronic unit for conditioning the efferent biosignals and generating the afferent signals in order to reach the final goal of the clinical evaluation of the platform on selected patients. We present here the preliminary experimental results obtained on animals.

The neural recording-stimulation unit is described in its basic blocks in Fig. 2 and consists of four main parts: 1) electrode; 2) neural recording circuitry; 3) stimulus generation circuit; and 4) digital system controller.

The electrode represents the link between the biological tissues and the sensing electronics. There are many kinds of electrodes that are commonly employed in PNS recordings, each of which has different characteristics in terms of selectivity and invasivity. In this work, the tf-LIFE has been chosen since it represents a good compromise between the excessive invasivity of the sieve electrodes and the poor selectivity of cuffs. The longitudinal insertion, indeed, enables placing the electrode inside the perinervium without the transversal recision of the nerve. Moreover, tf-LIFEs have 8 independent channels and, therefore, allow simultaneous recordings and/or simulations [2].

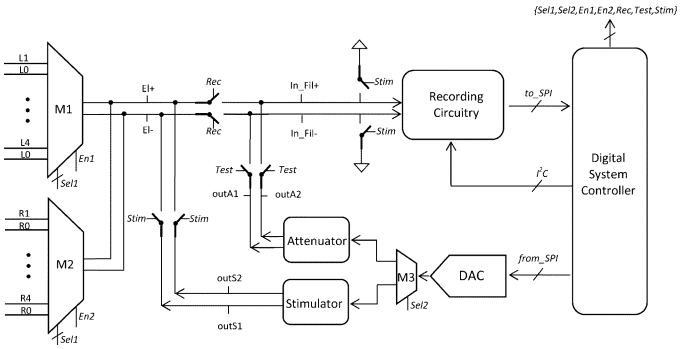

Fig. 3. Switch network for system reconfigurability.

TABLE I
SWITCHES CONFIGURATION FOR DIFFERENT OPERATING MODES

Working mode	*Rec*	*Stim*	*Test*
Recording	1	0	0
Stimulation	0	1	0
Test	0	0	1

The extracellular signals extracted from the tf-LIFE are acquired and filtered by recording circuitry in order to remove unwanted low-frequency components. Once the neural signal has been cleaned, it can be digitally converted before being transmitted to the digital control unit. A programmable amplification stage has been added in order to exploit the full dynamic range of the analog-to-digital converter (ADC). The stimulation circuitry delivers trains of electrical charge pulses to excitable tissue, via the tf-LIFE electrode. The system receives stimulus patterns from the digital controller and converts them first into an analog voltage through a digital-to-analog converter (DAC) then into a stimulation current signal by means of a V/I converter. The digital system controller has two main tasks. First, it provides power from a rechargeable battery to ensure the isolation of the patient from the electric grid (both for safety reasons and to reduce the interferences injected by the grid). The main task of the module, however, is managing the configuration of the entire system with the generation of timing signals (for multiplexers, ADC, DAC), programmable gain and stimulation patterns. For a high-speed real time data transmission, a universal-serial-bus (USB) controller has been integrated in the system. The layout design of custom boards used in this system as well as the developed software and firmware are available from the corresponding author upon request.

IV. OPERATING MODES

The neural electronic interface has been mainly realized for stimulation and recording purposes, but an additional operating mode, namely, the test mode, has been made available to the user. This high flexibility is guaranteed by the network of switches shown in Fig. 3. Table I describes how the signals *Rec, Stim* and *Test* must be digitally set to choose the operating mode.

Recording Mode: During this working mode, *in vivo* signals can be acquired. The neural signal is captured from the tf-LIFE electrode and sent to the recording unit by short-circuiting nodes $El+$ and $El-$ with the input terminals of the filter (In_Fil+, In_Fil-) by using the switches driven by *Rec* signal. The signal is then filtered, amplified, converted into digital samples, and sent to the PC to be stored in a data file. Since the system has a single signal path, the eight tf-LIFE channels can not be acquired simultaneously. Two multiplexers ($M1$ and $M2$) select which input pair must be acquired and forwarded to the recording unit. The enable signals $En1$ and $En2$ activate only one multiplexer at a time.

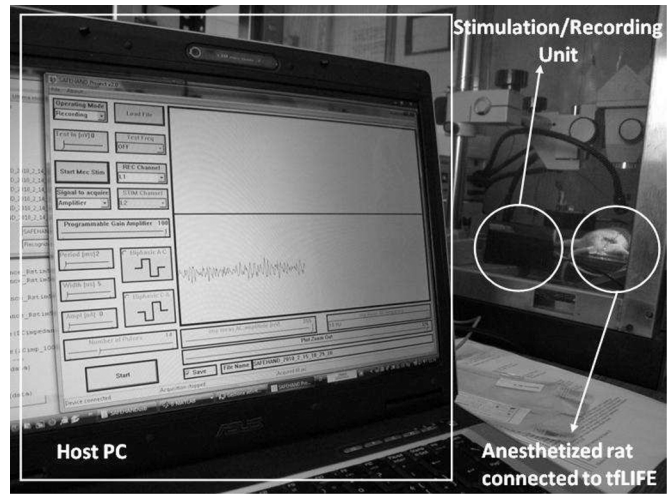

Fig. 4. Graphical user interface.

The GUI (Fig. 4) allows the user to change the recording channel (among the eight available in a tf-LIFE) and to modify the amplification gain during the experiments. A trigger signal can be activated to keep track of the occurrence of external stimuli, thus simplifying the offline analysis or recorded data. The captured physiological data can be viewed in the GUI in real time and can also be sent to the loudspeakers of the PC. This latter function has been particularly useful during *in vivo* experiments as a runtime feedback and could be exploited during implantation to guide the final adjustment of the electrode position inside the nerve.

Stimulation Mode: When this operating mode is selected, the system is enabled to inject a stimulation current in a selected tf-LIFE channel. Different digital patterns, generated by the system controller, are converted into an analog voltage by the DAC. Activating the selection signal $Sel2$ of $M3$, the resulting analog signal can be sent to the stimulator, a V/I converter, that generates the stimulation current. The switches driven by the signal *Stim* enable connecting the stimulator outputs to $El+$, $El-$ nodes. At the same time, to avoid drift voltage phenomena and to prevent amplifier saturation (thus reducing the recovery time after the stimulation artifact), the input terminal of the filter is connected to a reference voltage, thus temporarily blanking the recording circuitry. Parameters, such as amplitude, shape, pulse duration, frequency of the pulse, and the number of pulses can be modified in real time by the GUI.

Test Mode: The test working mode enables evaluating and verifying the recording circuitry functionalities in terms of bandwidth and gain, before *in vivo* laboratory trials on animals. A prerecorded neural pattern stored in a text file on the PC, can be set as DAC input, processed by the recording circuitry and

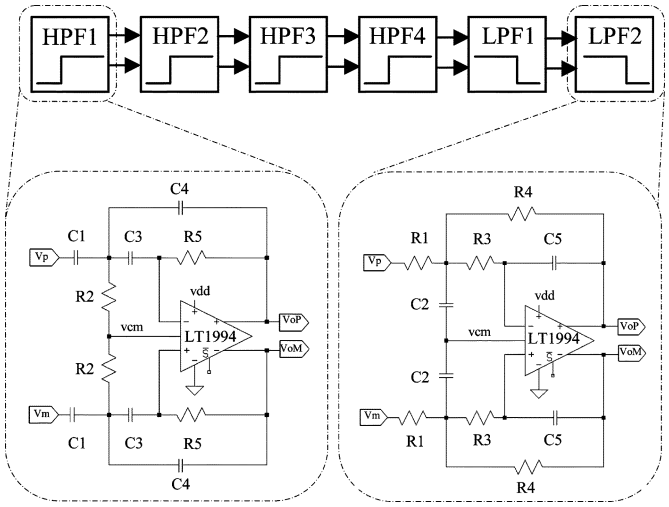

Fig. 5. Circuit diagram of the band-pass filter.

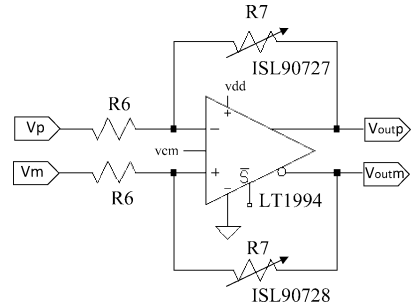

Fig. 6. Amplification circuitry.

then saved into a data output file. Since the converter output voltage swings from 0 V to 3 V, with a resolution of 45.7 μV, the generation of signals in the range of a few microvolts has required the introduction of an attenuation factor of 0.01. The DAC output signal is propagated to the attenuator by means of $M3$, deactivating the $Sel2$ signal. Once that the signal has been significantly reduced, it is redirected to the recording circuitry (closing the switch driven by *Test* signal) in order to be processed.

TABLE II
RESISTORS AND CAPACITORS VALUES FOR THE HP FILTER

Component	HPF1	HPF2	HPF3	HPF4
R_2	150Ω	56Ω	150Ω	56Ω
R_5	820Ω	3520Ω	820Ω	3520Ω
C_1	$1.13\mu F$	$1.13\mu F$	$1.13\mu F$	$1.13\mu F$
C_3	$1.13\mu F$	$1.13\mu F$	$1.13\mu F$	$1.13\mu F$
C_4	$330nF$	$330nF$	$330nF$	$330nF$

TABLE III
RESISTORS AND CAPACITORS VALUES FOR THE LP FILTER

Component	LPF1	LPF2
R_1	150Ω	390Ω
R_3	150Ω	390Ω
R_4	390Ω	1500Ω
C_2	$330nF$	$330nF$
C_5	$10nF$	$10nF$

V. CIRCUITRY DESIGN

A. Neural Recording Circuit

The implemented filtering circuitry is shown in Fig. 5: it is made up of an eighth-order high-pass filter cascaded with a fourth-order low-pass filter. All of the basic blocks are second-order cells and have been implemented with a multiple feedback topology. Fully differential input/output amplifiers (Linear Technology, LT1994) with a very low noise density ($3n$V/$\sqrt{\text{Hz}}$) have been employed.

The filter design specifications required a gain of 56 dB and a frequency bandwidth between 800 Hz and 3 kHz. The gain has been equally subdivided among the blocks; therefore, every cell provides a gain of 9.3 dB. In this way, it has been possible, at the same time, to reduce the input-referred noise (IRN) and to prevent the amplifier saturation caused by low-frequency interference amplified before being properly filtered. Reduction of IRN is achieved by allocating some gain (9.3 dB) at the very first stage of amplification; by distributing the overall gain along the signal chain, it has been possible to filter out interference components before fully amplifying them [13], [24], [35]. In Tables II and III, the values of the resistive and capacitive components, referring, respectively, to the high-pass filter and to the low-pass filter, are reported. In Fig. 6, the chosen amplification circuitry is shown: the digitally controlled potentiometers $R7$ (Intersil, ISL90727, ISL90728), in pair with resistors of 100 Ω ($R6$), allow obtaining a gain factor that can vary from 1 V/V to 100 V/V with 127 different values. The gain is set by the user through the graphical user interface (GUI); however, the software can be easily modified in order to implement automatic control. The chosen differential ADC (Analog Devices, AD7687) provides the processed signal with a resolution of 16 b, an effective number of bits (ENOB) of about 15.3, and a sampling frequency of 10 kHz to the digital control unit. The attenuator used in the test mode has the same architecture proposed for the amplifier but fixed resistances have been used ($R6 = 10$ kΩ, $R7 = 100\ \Omega$).

B. Neural Stimulation Circuit

The bidirectionality of the neural electronic interface implies the integration of a stimulation unit. Neural stimulation consists typically in the injection of current pulses into the implanted electrode. As shown in Fig. 7, this is possible by using two main blocks: a DAC (Linear Technology LTC2641) and a V/I converter realized by using a simple operational amplifier (Texas Instruments, OPA343) in a noninverting configuration, where the feedback resistor is the electrode impedance.

The basic idea is to convert a programmable voltage, generated by the DAC, into a stimulation current that will flow through the tf-LIFE. Note that R_{electr} in the circuit represents the tf-LIFE impedance. According to the datasheets, the exact range of the electrode impedance is controversial and its values at 1 kHz span from 10 kΩ to 1 MΩ. In the literature, similar values have been reported [36], [37].

C. Digital System Controller and Transmission Unit

The analog part of the board contains, as reported in the previous sections, many devices whose behavior must be

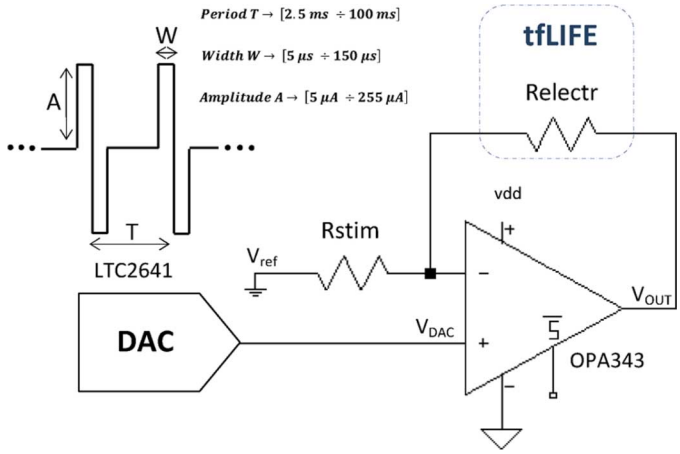

Fig. 7. Neural stimulation circuitry.

Fig. 8. Photograph of the implemented PCB system.

digitally controlled. For this reason, a digital unit is mandatory for proper operation of the system. As the main digital signal controller (DSC), the high-performance microchip $dsPIC33Fj256GP506$ has been used. The DSC employs a powerful 16-b architecture that integrates the control features of a microcontroller unit (MCU) with the computational capabilities of a digital signal processor (DSP). Among all available communication modules, the 3-wire serial peripheral interface (SPI) and the inter-IC (I^2C) have been employed in this system. In the analog recording and stimulation management, two SPI modules are used for the communication between dsPIC/ADC and dsPIC/DAC while an I^2C bus is employed to control the value of the digital potentiometers of the amplification circuit. The dsPIC is also responsible for the configuration of the system (electrode selection, stimulation shape parameters, switches selection). The transmission module consists of a USB controller (microchip $PIC18LF4550$) that interfaces the DSC (exploiting an I^2C interface) with the host PC. Moreover, the controller unit contains all of the circuitry for power management, namely: a rechargeable battery (3.7 V) to ensure the isolation of the patient from the electrical grid, the recharging circuit, and two voltage regulators (Maxim, MAX1589 and MAX1792) of 3 V and 1.5 V that are needed to power the digital board itself.

VI. Experimental Results

The fabricated prototype housed in a protective enclosure (which is not custom-made and, thus, is larger than what is needed) is shown in Fig. 8. Special attention has been paid on how to isolate the analog module from the interferences (especially on supplies) generated by the digital unit. For this reason, the system has been divided into analog and digital parts and implemented in two separate, sandwich-detachable, printed-circuit boards (PCB) measuring 7×6.1 cm and 7.5×5.8 cm, respectively.

The proper operation of the entire neural embedded system has been validated at two different levels. First, the electronic behavior has been confirmed by configuring the system in test working mode. Later, the recording and stimulation capabilities have been assessed through *in vivo* measurements on animal subjects.

In particular, the first phase of experiments was aimed at validating the bandpass filter selectivity. Sinusoidal signals, generated by the stimulating unit in the test mode, have been acquired by the recording unit at 20 different frequencies, covering values from 400 Hz to 9 kHz. The filter presents a maximum gain value of 56 dB in a bandwidth between 800 Hz and 3 kHz, a highpass rolloff of 160 dB/dec, and a lowpass rolloff of 80 dB/dec. The filter linearity has also been verified; the output differential voltage, at 800 Hz, can swing between $[-2.84\ \text{V} \div 2.83\ \text{V}]$. For an input signal with an amplitude of 1.1 mVpp and a frequency of 800 Hz, the total harmonic distortion, with a programmed gain of 56 dB, is 0.076%. All front-end (filter, amplifier, and ADC) functionalities have been tested using, as input, prerecorded neural patterns supplied by the Scuola Superiore Sant'Anna in Pisa (SSSA), on the basis of recordings made in clinical trials with rabbits. The input pattern, represented in Fig. 9(a), corresponds to 10 s of recording during which the rabbit was subjected to vibrations at 50 Hz and 100 Hz in cutaneous afferents. The input signal is affected by EMG (and probably ECG) interferences with a very large amplitude (in the millivolts range) and a spectrum [Fig. 9(b)] concentrating below 300 Hz. These types of interference completely mask the underlying neural signal. Fig. 9(c) displays the measured, input-referred output of the device and Fig. 9(d) shows its power spectral density: the low-frequency interference is completely removed, and the weak neural signal (in the microvolts range) is now visible as well as its frequency signature. The test was carried out in a noisy environment without any special electrostatic shielding.

The *in vivo* measurements have been performed on anaesthetized animals at the School of Medicine of the Universitat Autonoma de Barcelona (Spain). A tf-LIFE electrode was implanted in the sciatic nerve of an adult 3-month-old Sprague–Dawley rat weighing $300 \div 350$ g, using aseptic microsurgery procedures as shown in Fig. 10. All processes were performed under ketamine/xilacyne anaesthesia (90/10 mg/kg i.p.) and using a protocol approved by the local ethical committee.

Various sensory stimuli were applied to the hind limb of the anesthetized animal, and the elicited ENG signals were recorded by using the developed embedded system (Fig. 11).

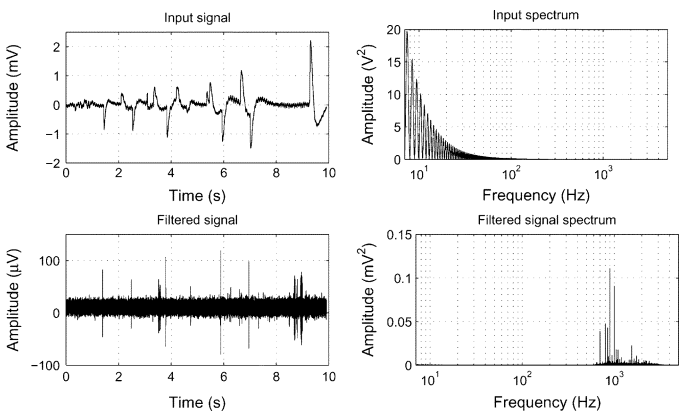

Fig. 9. Self-test with prerecorded data. (a) Input signal. (b) Input-power spectral density. (c) Output signal (input-referred). (d) Output spectral density.

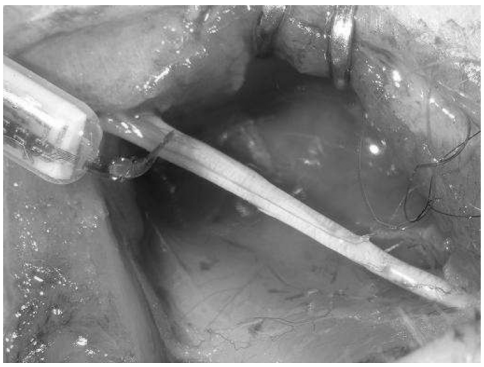

Fig. 10. Photograph of the rat sciatic nerve with a tf-LIFE implanted.

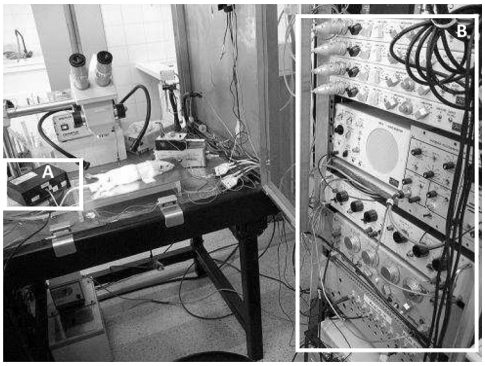

Fig. 11. Experimental setup: (a) Our PCB system. (b) Typical lab instrumentation.

A. Recording Capabilities

The neural activity was recorded from each electrode's active site, both in response to mechanical stimuli applied on the animals hindpaw and distal electrical stimulation. Good sensitivity to the application of tactile stimuli on the rat's hindpaw by touching the plantar skin with a special instrument used to produce a controllable sensation of touch (the Von Frey filament) has been observed for the R4 channel as depicted in Fig. 12.

It can be observed that as the noise floor is 5.6 μV_{pp}, corresponding to a root mean square (rms) value of 0.83 μV, the recording unit is therefore capable of detecting microvolt-level neural signals. The rms value has been calculated according to

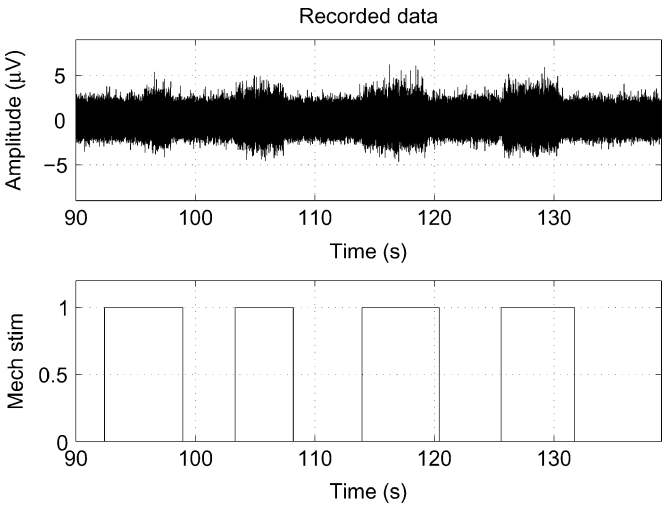

Fig. 12. Input-referred response recorded from a tf-LIFE during mechanical stimulation of a rat's hindpaw by means of Von Fray filaments.

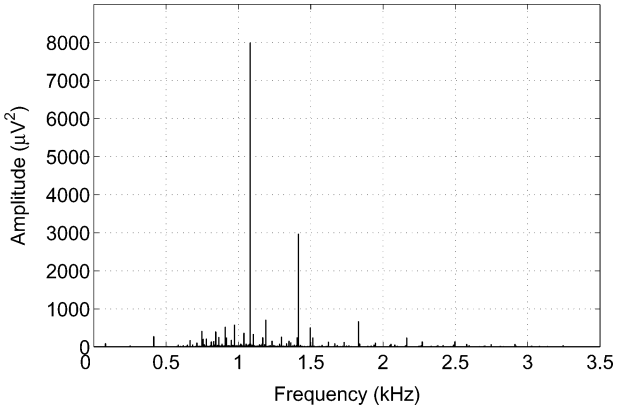

Fig. 13. Power spectral density of the recorded pattern of Fig. 12.

(1), where $N = 77200$ noise samples have been extracted from the data displayed in Fig. 12

$$x_{\mathrm{rms}} = \sqrt{\frac{x_1^2 + x_2^2 + \cdots + x_n^2}{N}}. \tag{1}$$

The neural patterns show amplitudes around 10 μV_{pp}; such low values, even if not common, have been detected by other authors [30]. In Fig. 13, the spectrum of the signals displayed in Fig. 12 is reported; it can be observed that the most significant contributions are close to 1 kHz.

To further test the acquisition circuitry, electrical stimulation of afferent peripheral nerves has been performed by means of a micrographic stimulation needle inserted in the rat hind paw and connected to the Grass stimulation unit. The recording site was 5 cm distal to the stimulating needle which generated the graded electrical potentials (from 0 V to 10 V), ensuring current values lower than 10 mA. The total duration of the stimulus was 100 μs with a pulse repetition frequency of 1 Hz. The afferent response recorded by means of the tf-LIFE electrode and elaborated by the presented circuit is shown in Fig. 14.

Fig. 15 highlights the response evoked by a single stimulation impulse. The first peak of the waveform is the stimulation artifact while the second peak should correspond to the compound

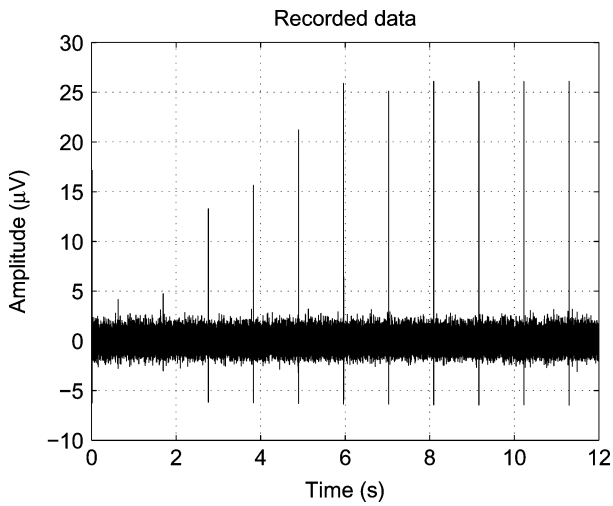

Fig. 14. Neural response recorded from tf-LIFE during graded afferent electrical stimulation.

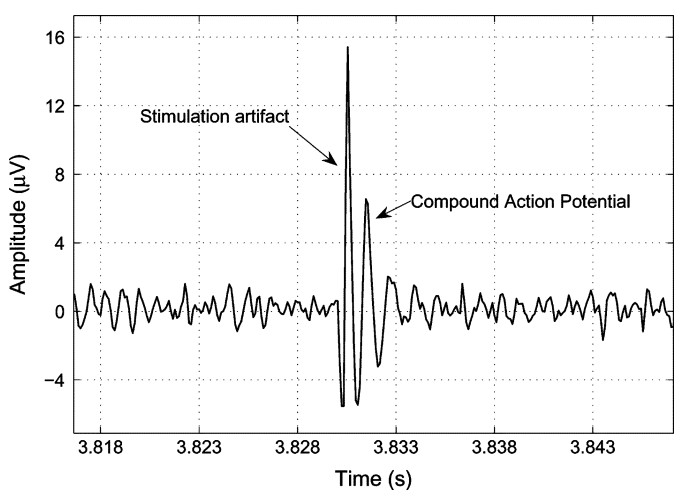

Fig. 15. Recorded compound nerve action potential response to afferent electrical stimulation.

action potential (CAP). For an estimated propagation speed of 42 m/s (it may vary depending on many factors), the 5-cm distance should produce a delay of around 1.2 ms between the two peaks. This delay is about 10 times larger than the sampling period; thus, it is detectable by the system. The curve of Fig. 15 is coherent with this theoretical value.

The results of this experiment, anyhow, should be analyzed more in detail since the peaks in Fig. 14 may also have a different origin. Actually, when passing through the high-order band-pass filter, the stimulation artifact may generate an impulse response with a ringing effect similar to that shown in Fig. 15. In order to be sure to distinguish a CAP signal from the natural ringing of the filter, we measured the impulse response of the device by directly applying an external stimulation of the same amplitude and width of that applied during the *in vivo* experiments. An example of this impulse response is shown in Fig. 16 where it is compared with the corresponding *in vivo* experimental recordings. The figure shows that the two waveforms have different shapes and ringing frequencies. We must conclude that the measured waveform is the superposition of the actual CAP signal

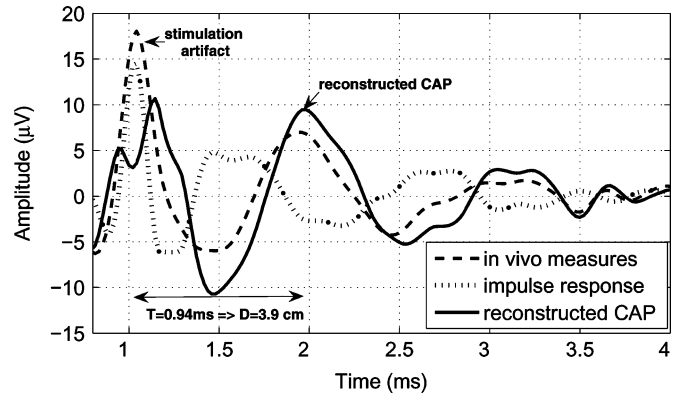

Fig. 16. *In vivo* recorded data versus amplifier ringing.

TABLE IV
ESTIMATED DISTANCES BETWEEN THE RECORDING AND THE STIMULATION SITE. D1: DISTANCE CALCULATED DIRECTLY FROM *IN VIVO* MEASUREMENTS, D2: DISTANCE CALCULATED FROM THE FILTER IMPULSE RESPONSE, D3: DISTANCE CALCULATED FROM THE RECONSTRUCTED CAP OBTAINED AS THE DIFFERENCE BETWEEN THE *IN VIVO* MEASUREMENT AND THE IMPULSE RESPONSE

Channel	D1 (cm)	D2 (cm)	D3 (cm)
L1	3.7	2.5	**4**
L2	4.1	2.4	**4.2**
L3	3.2	2.5	**3.7**
L4	2.6	2.3	**3**
R1	3.3	2.8	**3.4**
R2	3.9	2.4	**4.1**
R3	2.9	2.4	**3.9**
R4	2.4	2.1	**3.2**
AVERAGE	**3.2**	**2.4**	**3.7**

and the natural ringing of the filter. The actual CAP signal, anyway, can be reconstructed by simply subtracting the measured impulse responses from the experimental recordings. (The result is shown in Fig. 16).

We repeated this operation for a number of different recordings, changing the stimulus amplitude and the recording electrode. Measuring the delay between the stimulation artifact and the first peak we estimated, considering a nerve propagation speed of 42 m/s, the distance between the stimulation needle and the tf-LIFE electrode. In Table IV, we report the estimated distances for each electrode, averaged over measures repeated for different stimulus amplitudes. In all of the trials, the signal that was obtained by calculating the difference between the *in vivo* results and the ringing, leads to a calculated distance that is more consistent with the expected results of about 5 cm, confirming that the ringing is partially masking a CAP.

The reason for the graded nerve response of Fig. 14 is quite simple. The nerve is composed of many fibers of different diameters and conduction velocity. At the lowest stimulus strengths, the fibers closest to the recording site with the largest diameter start responding. Then, as the stimulus intensity is gradually increased, more fibers are recruited, giving rise to a higher response. Finally, at maximal stimulus strength, every axon in the nerve is involved and no further increase in the response can be achieved. This phenomenon is confirmed by the saturation in the curve, showing the maximum value of each CAP peak (Fig. 17).

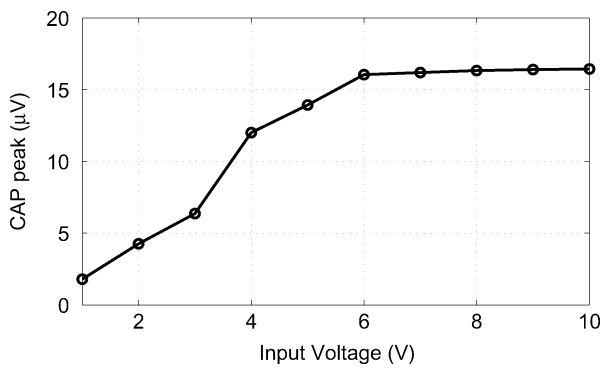

Fig. 17. Maximum value of each CAP peak.

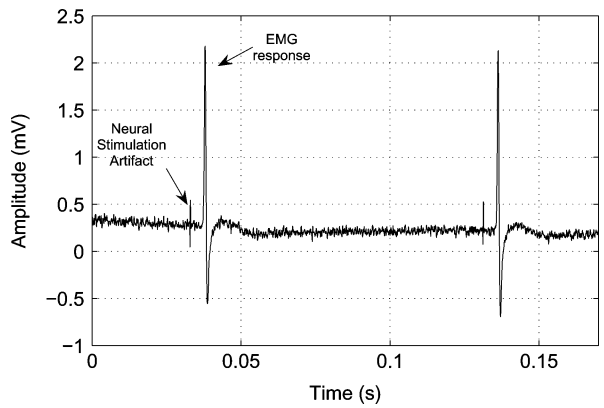

Fig. 18. EMG recording from the plantar muscle evoked by the developed stimulation circuitry.

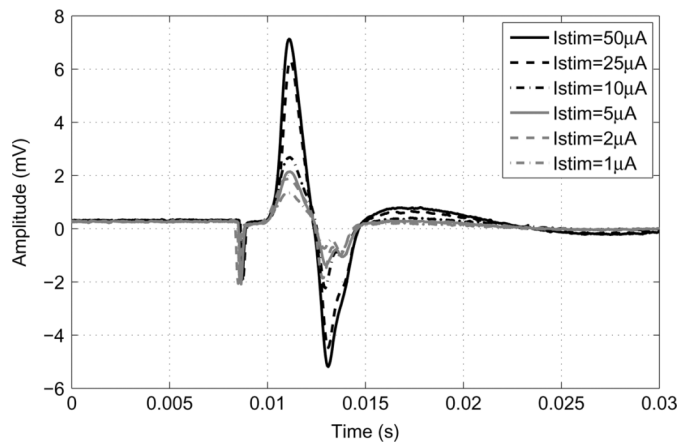

Fig. 19. EMG response evoked by graded stimulation currents.

TABLE V
IRN AND POWER CONSUMPTION REPORTED IN THE LITERATURE

Paper	IRN $[\mu V_{rms}]$	Technology
[12]	2.2 @(500mHz-50kHz)	IC
[14]	4.8 @(0 - 5kHz)	IC
[15]	1 @(163Hz - 9.792kHz)	COTS
[16]	1 @(445Hz - 6.6kHz)	COTS
[17]	3.5 @ (500mHz - 7.4kHz)	COTS
[25]	6.08 @(10Hz-5kHz)	IC
[26]	18.9 @(600Hz - 5.3kHz)	IC
[27]	32 @(n.a.)	IC
[28]	2.4 @(1Hz-100kHz)	IC
[31]	0.29 @(1Hz-10kHz)	IC
[34]	1.95 @(290Hz-6kHz)	IC
this work	0.83 @(800Hz - 3kHz)	COTS

A further confirmation than what is observed in Fig. 14 is the CAP response; this saturation phenomenon does not occur for the measured impulse response of the filter, at least until the dynamic range of the amplifier is reached.

B. Stimulation Capabilities

The stimulation capabilities of the embedded system have been validated by means of selective stimulation of efferent fibers. The evoked muscle response was recorded in the plantar muscle of the rat by using a PowerLab system by ADInstruments for data acquisition. The stimulus was delivered by individually selecting the electrode sites of the implanted tf-LIFE. In Fig. 18, the EMG response evoked by two biphasic pulses of amplitude 200 μA and width 10 μs is shown. Muscular activity appears approximately 2.5 ms after the stimulus artifact.

Amplitude programmability of stimulation pulses is evident in Fig. 19, where the EMG response to graded neural efferent stimulus is reported. Slight muscle twitches in the hind paw of the rat have also been observed during the experiments.

VII. DISCUSSION

A. Noise

In all applications in which the signals to be acquired are weak biological voltages or currents, the use of special techniques for low noise and low-power design is mandatory. Therefore, the choices made during the design phase have been addressed to reduce these problems. The entire system has been implemented in two distinct PCBs—one for the analog part and one for the digital part in order to preserve the critical analog paths from digital interferences and from power-supply noise. The fully differential configuration helps to eliminate all of the common-mode source noises; moreover, it enables doubling the output dynamic range, making voltage supply reduction possible. The thermal noise has been reduced by minimizing the resistor's value in the filter feedback network, obtaining a simulated input referred noise of 268 $\mathrm{nV_{rms}}$ in the bandwidth (600 Hz–3.6 kHz). Environmental noise has been minimized by paying careful attention to the PCB layout, making the connection lengths among different modules as short as possible, especially tracks carrying the neural signals that directly come from the electrodes. Since the EMG interference is the most worrying noise contribution, in order to avoid the neural signal corruption, an eighth-order high-pass filter with a 160 dB/dec rolloff factor has been chosen. A blanking technique has also been adopted. In this way, it is possible to switch from the stimulation mode to the recording mode, avoiding the recovery time of the filter. In Table V, a comparison of different IRN found in the literature is reported.

It should be noted that a direct comparison of these kinds of circuits is very difficult since they show very different characteristics and specifications. A comparison made solely on noise is therefore a bit unfair since among the cited devices, there are ICs and COTS electronics. Some of them include only the preamplifier [12], [31]; others contain the preamplifier and a band-pass

filter [34], [17]; some others incorporate also a programmable gain amplifier [15], [16] or ADCs [14]–[16], [25]; finally, the bandwidths on which IRN is calculated vary a lot. Moreover, a large difference is made by dissipated power, since power consumption is inversely proportional to the square of IRN [38]. Nevertheless, Table V gives an idea of the performance of this circuit at least when noise is the major concern and shows that this work has a fairly low IRN (0.83 μV_{rms}). The given IRN value has been measured from the signals recorded during the experiments on animals while the electrodes and the PCB were housed inside a shielded Faraday cage. Anyhow, similar values have been obtained also when electrically testing the device with artificial external stimuli or during self-test (Fig. 16) in the noisy environment of the electronic lab [39], [40]. The measured IRN is larger than the simulated one since it includes the effect of all imperfections of the PCB, electrodes noise, environmental noise, and the contribution of the long wires that connect the implanted electrodes to the board.

B. Power

Power consumption has been reduced as much as possible (given the use of a COTS approach), but the main aim remained at minimizing the total noise so not all power reduction techniques could be used. A single supply architecture was adopted by extracting a 3-V supply voltage with a linear regulation (MAX1589) of a 3.7-V battery supply. A signal ground of 1.5 V (with respect to battery ground) was obtained from another linear regulator (MAX1792). The signal ground obtained in this way proved to be very clean since no current is drawn from the wire. This approach enables avoiding the use of step-up converters that would be needed in a dual supply architecture, thus avoiding the related high-frequency noise.

The total power consumption was evaluated during electrical tests by measuring the current drawn from the battery. Static power, including the analog and the digital part, is lower than 1 W. About 35% of total power is dissipated by the analog module. Analog board power consumption is 86% and is due to the recording module which contains seven low-noise operational amplifiers not specifically addressed for low-power operations.

The device could be used for several hours, and the battery was recharged only during the breaks of the experimental session. This is compatible with the use in clinical trials that cannot last (not to fatigue the patient) for more than a few consecutive hours.

C. Achievements and Future Improvements

The electrical and *in vivo* tests confirm that the level of noise and inteference in the circuit is low enough to detect neural spontaneous signals in the order of a magnitude of a few microvolts. The IRN is one of the lowest for a COTS device. The overall gain of the front-end signal path is suitable and allows adapting the output signal level to the dynamic range of the ADC without saturation effects. The absence of EMG interference has been confirmed by tests with prerecorded neural signals (Fig. 9). It is worthy to note that even if EMG interference may partially overlap the passband of the filter, since the power spectrum of EMG decreases at increasing frequencies and it is lower than that of ENG above 800 Hz, these residual electromyographic contributions will not saturate the amplifier and may be eliminated via software postprocessing techniques.

From the stimulation point of view, we demonstrated the capability of generating muscular twitches and the related electromyographic signals by injecting biphasic current pulses. Even if many other stimulation shapes have been investigated [41], the biphasic waveforms seem to be the best ones. As a matter of fact, monophasic stimulation leads to charge accumulation at the electrode-tissue interface and can cause tissue damage whereas biphasic stimulation ensures charge balancing, thus preventing these problems [25]. Anyhow, the stimulation parameters are fully programmable and easily reconfigurable by the user to meet changing requirements in real time by means of a GUI. If needed, the firmware can be simply modified by allowing generation of other kinds of stimuli.

The main novelty of the proposed device is therefore the integration, in a single portable board, of all features required for a complete and low-cost interface between the PNS and a host computer: a very-low-noise recording unit characterized by a sharp bandpass filter for EMG interference rejection and a software-programmable stimulation module. To give the reader a comparative figure of merit, our PCB has been realized with less than 300€, while the cost for commercial instrumentation with the same features is largely above 10 000€.

A possible improvement is the implementation of parallel acquisition of all eight channels of the tf-LIFE. This requires replication of the analog front-end module made up by the filter and the programmable amplifier. The estimated area for a board containing eight parallel channels is around 15 cm × 15 cm which corresponds to an increase of 161% of the present area. The increase is so small (around 2.5x) since the analog-to-digital conversion, the stimulation unit, and the digital board would stay the same while replication of the input channels would allow removing the bulky analog multiplexers. The drawback, of course, is an increase of power consumption which we estimate would reach 2.7 W. Another useful improvement is further miniaturization of the system, that would be possible by removing the self-test structures and the multiplexers required to implement the different operating modes. For what concerns the recording unit, the neural signals acquired through a tf-LIFE electrode seem to have a very low amplitude that hardly exceeds 10 μV. This limit is a bit lower than what is expected and suggests carefully designing the input stage and the resolution of analog-to-digital conversion. The selectivity of the filter is important to reduce interference but has the drawback of generating an impulse response with a large ringing effect, thus a proper tradeoff should be envisaged. Looking at the spectral fingerprint of the acquired signals, it seems reasonable that the order of the high-pass filter could be reduced without affecting the recording capabilities too much and without picking up too much interference. The effective resolution of 15 b is enough to distinguish the neural signals from the noise floor. On the stimulation side, we proved that it is possible to evoke muscle responses even with stimuli of tens of microamperes; with animal experiments, what remains unanswered is the possibility of evoking sensorial feedback with these levels of currents. Finally, in view of the realization of a portable neuroprosthetic device,

given the power consumption and size of the present board, the natural evolution seems to be the integration of recording and stimulation circuitry on a single IC.

VIII. Conclusion

In this paper, we presented an embedded system for extracellular peripheral neural recording and stimulation. It has been realized by using a COTS-based design which provides a low-cost solution with short implementation time, high reconfigurability, and flexibility. Given the nature of the signals to be acquired, special low-noise design techniques have been adopted.

In this paper, the experiments have been performed by using the tf-LIFE, but the entire system can be exploited by also using different kinds of intraneural and perineural electrodes. The recording circuitry enables filtering the signals extracted by the electrode in the frequency range of 800 Hz–3 kHz, providing a programmable gain that covers values from 56 to 96 dB. The resulting signal can be digitally converted with 16-b resolution and sent to a PC through USB transmission for further processing.

Preliminary *in vivo* experimental results prove that the system works correctly and stably, with the possibility of acquiring and processing ENG activity with an IRN of 0.83 $\mu\mathrm{V}_{\mathrm{rms}}$ during mechanical and afferent electrical stimulation in the microvolt range. The embedded system is also capable of generating biphasic current stimuli by means of a DAC followed by a voltage-to-current converter. The stimulus parameters, including current intensity, stimulus frequency, and pulsewidth, are individually adjustable and programmable by a GUI. Both the recording and stimulation activity can be performed with less than 1-W power consumption.

Acknowledgment

The authors would like to thank C. Cipriani and M. Chiara Carrozza of the Advanced Robotics Technology and System Laboratory of Scuola Superiore Sant'Anna in Pisa, and E. Guglielmelli, L. Zollo, and A. Benvenuto of the Biomedical Robotics and Biomicrosystems Laboratory of Universit Campus Bio-Medico in Rome for the fruitful collaboration within the project.

References

[1] T. Stieglitz, M. Schuettler, and K. P. Koch, "Implantable biomedical microsystems for neural prostheses," *IEEE Eng. Med. Biol. Mag.*, vol. 24, no. 5, pp. 58–65, Sep./Oct. 2005.

[2] X. Navarro, T. B. Krueger, N. Lago, S. Micera, T. Stieglitz, and P. Dario, "A critical review of interfaces with the peripheral nervous system for the control of neuroprostheses anf hybrid bionic systems," *J. Periph. Nervous Syst.*, pp. 229–258, 2005.

[3] E. V. Goodall, T. M. Lefurge, and K. W. Horch, "Information contained in sensory nerve recordings made with intrafascicular electrodes," *IEEE Trans. Biomed. Eng.*, vol. 38, no. 9, pp. 846–850, Sep. 1991.

[4] G. S. Dhillon, S. M. Lawrence, D. T. Hutchinson, and K. W. Horch, "Residual function in peripheral nerve stumps of amputees: Implications for neural control of artificial limbs," *J. Hand Surg. Am.*, vol. 29, no. 4, pp. 605–615, 2004.

[5] G. S. Dhillon and K. W. Horch, "Direct neural sensory feedback and control of a prosthetic arm," *IEEE Trans. Neural Syst. Rehab. Eng.*, vol. 13, no. 4, pp. 468–472, Dec. 2005.

[6] X. Jia, M. A. Koenig, X. Zhang, J. Zhang, T. Chen, and Z. Chen, "Residual motor signal in long-term human severed peripheral nerves and feasibility of neural signal-controlled artificial limb," *J. Hand Surg.* , pp. 657–666, Dec. 2007.

[7] P. M. Rossini, S. Micera, A. Benvenuto, J. Carpaneto, G. Cavallo, L. Citi, C. Cipriani, L. Denaro, V. Denaro, G. Di Pino, F. Ferreri, E. Guglielmelli, K. Hoffmann, S. Raspopovic, J. Rigosa, L. Rossini, M. Tombini, and P. Dario, "Double nerve intraneural interface implant on a human amputee for robotic hand control," *Clin. Neurophysiol.*, vol. 121, no. 5, pp. 777–783, 2010.

[8] K. Yoshida, K. Hennings, and S. Kammer, "Acute performance of the thin-film longitudinal intra-fascicular electrode," in *Proc. IEEE Conf. Biomed. Robot. Biomechatron.*, 2006, pp. 296–300.

[9] S. Micera, L. Citi, J. Rigosa, J. Carpaneto, S. Raspopovic, G. Di Pino, L. Rossini, K. Yoshida, L. Denaro, P. Dario, and P. M. Rossini, "Decoding information from neural signals recorded using intraneural electrodes: Toward the development of a neurocontrolled hand prosthesis," *Proc. IEEE*, vol. 98, no. 3, pp. 407–417, Mar. 2010.

[10] M. S. Malagodi, K. W. Horch, and A. A. Schoenberg, "An intrafascicular electrode for recording of action potentials in peripheral nerves," *Ann. Biomed. Eng.*, vol. 17, p. 397410, 1989.

[11] K. Yoshida and R. B. Stein, "Characterization of signals and noise rejection with bipolar longitudinal intrafascicular electrodes," *IEEE Trans Biomed. Eng*, vol. 46, no. 2, pp. 226–234, Feb. 1999.

[12] R. R. Harrison and C. Charles, "A low-power low-noise cmos amplifier for neural recording applications," *IEEE J. Solid-State Circuits*, vol. 38, no. 6, pp. 958–965, Jun. 2003.

[13] R. Rieger, M. Schuettler, D. Pal, C. Clarke, P. Langlois, J. Taylor, and N. Donaldson, "Very low-noise ENG amplifier system using cmos technology," *IEEE Trans. Neural Syst. Rehab. Eng.*, vol. 14, no. 4, pp. 427–437, Dec. 2006.

[14] R. R. Harrison, R. J. Kier, C. A. Chestek, V. Gilja, P. Nuyujukian, S. Ryu, B. Greger, F. Solzbacher, and K. V. Shenoy, "Wireless neural recording with single low-power integrated circuit," *IEEE Trans. Neural Syst. Rehab. Eng.*, vol. 17, no. 4, pp. 322–329, Aug. 2009.

[15] B. Gosselin and M. Sawan, "A low power portable multichannel neural data acquisition system," in *Proc. 10th Annu. Conf. Int. FES Soc.*, 2005, pp. 391–393.

[16] I. Obeid, M. Nicolelis, and P. Wolf, "A low power multichannel analog front end for portable neural signal recordings," *J. Neurosci. Meth.*, vol. 133, pp. 27–32, 2004.

[17] M. D. Linderman, V. Gilja, G. Santhanam, and A. Afshar, "An autonomous broadband, multi-channel neural recording system for freely behaving primates," in *Proc.28th IEEE EMBS Annu. Int. Conf.*, New York City, 2006, pp. 1212–1215.

[18] H. Sherk and E. J. Wilkinson, "A novel system for recording from single neurons in unrestrained animals," *J. Neurosci. Meth.*, vol. 173, pp. 201–207, 2008.

[19] W. Zhi-Gong, L. Xiaoying, L. Wenyuan, W. Huiling, Z. Zhenyu, W. Yufeng, and C. Wei, "Study of microelectronics for detecting and stimulating of central neural signals," in *Proc. 1st Int. Conf. Neural Interface and Control*, Wuhan, China, 2005, pp. 192–195.

[20] N. X. Fernando, D. N. Macklin, M. Y. Hsu, and J. W. Judy, "An embedded wireless neural stimulation and recording system," in *Proc. IEEE 3rd Int. EMBS Conf. Neural Eng.*, Kohala Coast, HI, 2007, pp. 333–336.

[21] S. Venkatraman, K. Elkabany, J. D. Long, Y. Yao, and J. M. Carmena, "A system for neural recording and closed-loop intracortical microstimulation in awake rodents," *IEEE Trans Biomed Eng*, vol. 56, no. 1, pp. 15–22, Jan. 2009.

[22] X. Ye, P. Wang, J. Liu, S. Zhang, G. Wang, W. Chen, and X. Zheng, "A portable telemetry system for brain stimulation and neuronal activity recording in freely behaving small animals," *J. Neurosci. Meth.*, vol. 174, pp. 186–193, 2008.

[23] T. Ativanichayaphong, J. W. He, C. E. Hegains, Y. B. Peng, and J. C. Chiao, "A combined wireless neural stimulating and recording system for study of pain processing," *J. Neurosci. Meth.*, vol. 170, pp. 25–34, 2008.

[24] T. Jochum, T. Denison, and P. Wolf, "Integrated circuit amplifiers for multi-electrode intracortical recording," *J. Neural Eng.*, vol. 6, pp. 1–26, 2009.

[25] F. Shahrokhi, K. Abdelhalim, D. Serletis, P. L. Carlen, and R. Genov, "The 128-channel fully differential digital integrated neural recording and stimulation interface," *IEEE Trans. Biomed. Circuit Syst.*, vol. 4, no. 3, pp. 149–161, Jun. 2010.

[26] J. Lee, H. G. Rhew, D. R. Kipke, and M. P. Flynn, "A 64 channel programmable closed-loop neurostimulator with 8 channel neural amplifier and logarithmic ADC," *IEEE J. Solid-State Circuits*, vol. 45, no. 9, pp. 1935–1945, Sep. 2010.

[27] Y. C. Chen, Y. T. Lee, S. R. Yeh, and H. Chen, "A bidirectional, flexible, neuro-electronic interface employing localised stimulation to reduce artifacts," in *Proc. 4th Int. IEEE EMBS Conf. Neural Eng.*, 2009, pp. 46–50.

[28] U. Frey, J. Sedivy, F. Heer, R. Pedron, M. Ballini, J. Mueller, D. Bakkum, S. Hafizovic, F. D. Faraci, F. Greve, K. U. Kirstein, and A. Hierlemann, "Switch-matrix-based high-density microelectrode array in CMOS technology," *IEEE J. Solid-State Circuits*, vol. 45, no. 2, pp. 467–482, Feb. 2010.

[29] Y. Nam, E. A. Brown, J. D. Ross, R. A. Blum, B. C. Wheeler, and S. P. DeWeerth, "A retrofitted neural recording system with a novel stimulation ic to monitor early neural responses from a stimulating electrode," *J. Neurosci. Meth.*, vol. 178, pp. 99–102, 2009.

[30] F. T. Jaber, F. H. Labeed, and M. P. Hughes, "Action potential recording from dielectrophoretically positioned neurons inside micro-wells of a planar microelectrode array," *J. Neurosci. Meth.*, vol. 182, pp. 225–235, 2009.

[31] R. Rieger, J. Taylor, A. Demosthenous, N. Donaldson, and P. J. Langlois, "Design of a low-noise preamplifier for nerve cuff electrode recording," *IEEE J. Solid-State Circuits*, vol. 38, no. 8, pp. 1373–1379, Aug. 2003.

[32] Y. Wang, Z. Wang, X. Lu, and H. Wang, "Fully integrated and low power cmos amplifier for neural signal recording," *Proc. IEEE Eng. Med. Biol. Soc.*, pp. 5250–5230, 2005.

[33] S. Y. Lee and S. C. Lee, "An implantable wireless bidirectional communication microstimulator for neuromuscolar stimulation," *IEEE Trans. Circuit Syst.*, vol. 52, no. 12, pp. 2526–2538, Dec. 2005.

[34] K. Limnuson, D. J. Tyler, and P. Mohseni, "Integrated electronics for peripheral nerve recording and signal processing," in *Proc. IEEE 31st Annu. Int. Conf. EMBS*, 2009, pp. 1639–1642.

[35] R. Rieger and J. Taylor, "Design strategies for multi-channel low-noise recording systems," *Analog Integr. Circuits Signal Process.*, vol. 58, no. 2, pp. 123–133, 2009.

[36] C. H. Chen, D. J. Yao, S. H. Tseng, S. W. Lu, C. C. Chiao, and S. R. Yeh, "Micro-multi-probe electrode array to measure neural signals," *Biosens. Bioelectron.*, vol. 29, pp. 1911–1917, 2009.

[37] R. R. Harrison, "A versatile integrated circuit for the acquisition of biopotentials," in *Proc. Custom Integr. Circuits Conf.*, 2007, pp. 115–122.

[38] W. Wattanapanitch, M. Fee, and R. Sarpeshkar, "An energy-efficient micropower neural recording amplifier," *IEEE Trans. Biomed. Circuits Syst.*, vol. 1, no. 2, pp. 136–147, Jun. 2007.

[39] D. Loi, C. Carboni, G. Angius, and M. Barbaro, "A PCB system implementation for neural signals recording and PNS stimulation," in *Proc. 7th IASTED Int. Conf. Biomed. Eng.*, 2010, pp. 135–140.

[40] G. Angius, C. Carboni, D. Loi, and M. Barbaro, "An electronic interface for neural recording activity and stimulation," in *Proc. 3rd Int. Conf. Biomed. Electron. Devices*, 2010, pp. 211–214.

[41] A. Wongsarnpigoon, J. P. Woock, and W. M. Grill, "Efficiency analysis of waveform shape for electrical excitation of nerve fibers," *IEEE Trans. Neural Syst. Rehab. Eng.*, vol. 18, no. 3, pp. 319–328, Jun. 2010.

Daniela Loi received the M.Sc. degree in electronic engineering from the University of Cagliari, Cagliari, Italy, in 2006, and the Ph.D. degree in bioengineering from the University of Genoa, Genoa, Italy, in 2010.

Her research interests include the design and realization of electronic embedded systems for biomedical signals acquisition, processing, and transmission. She took part in research projects concerning the development of complementary metal–oxide semiconductor biosensors for DNA detection, and the design of electronic systems for neural activity recording and stimulation.

Caterina Carboni is currently pursuing the Ph.D. degree in electronic engineering and computer science at the University of Cagliari, Cagliari, Italy.

Her main research activity focuses on the design and testing of microelectronic interfaces for biomedical signal processing. She is currently working on the development of a complementary metal–oxide semiconductor integrated circuit for neural activity recording and stimulation.

Gianmarco Angius received the M.Sc. degree (Hons.) in electronic engineering and the Ph.D. degree in electronic engineering and computer science from the University of Cagliari, Cagliari, Italy, in 2005 and 2009, respectively.

Currently, he is a Postdoctoral Fellow at the University of Cagliari in a project concerning the development of electronic devices and systems for biomedical applications. His current research activity mainly focuses on the development of novel very-large-scale integrated digital bioinspired architectures, digital frameworks and algorithms for signal processing in biomedical devices, and the development of digital telemedicine systems for the remote monitoring of elderly people, diabetes, and cardiovascular diseases.

Gian Nicola Angotzi received the B.S. and Ph.D. degrees in electronic engineering from the University of Cagliari, Cagliari, Italy, in 2003 and 2007, respectively.

He joined the Italian Institute of Technology, Genoa, Italy, as a Postdoctoral Researcher in 2008. His research interests include low-power analog design for brain–machine interfaces.

Massimo Barbaro (M'05) was born in Cagliari, Italy, in 1972. He received the Laurea and Ph.D. degrees in electronic engineering and computer science from the University of Cagliari, Cagliari, Italy, in 1997 and 2001, respectively.

In 2002, he joined the Department of Electrical and Electronic Engineering, University of Cagliari, as Assistant Professor in the field of analog microelectronics. His current research interests are the design of complementary metal–oxide semiconductor (CMOS) imagers with computational capabilities, CMOS and organic biosensors, and implantable neural interfaces.

Luigi Raffo (M'97) received the laurea degree in electronic engineering and the Ph.D. degree in electronics and computer science from the University of Genoa, Genoa, Italy, in 1989 and 1994, respectively.

Currently, he is Full Professor of Electronics in the Department of Electrical and Electronic Engineering, University of Cagliari, Cagliari. In 1994, he joined the Department of Electrical and Electronic Engineering, University of Cagliari, as Assistant Professor; in 1998, as Associate Professor, and since 2006, as Full Professor of Electronics. He teaches courses on system/digital and analog electronic design and processor architectures for the course studies in electronic and biomedical engineering. He is author of many scientific papers in the field. His main research interests are in the field of microsystem design. His applications are in the field of high-performance computing and biomedical instrumentation and devices.

Stanisa Raspopovic received the B.S. and M.S. degrees (Hons.) from the University of Pisa, Pisa, Italy, and is currently pursuing the Ph.D. degree in biomedical robotics at the Scuola Superiore Sant' Anna, Pisa.

During 2007, he was a Visiting Researcher at the Universitat Autonoma Barcelona, Barcelona, Spain, and in 2010 at ETH Zurich, Zurich, Switzerland. His research interests are in neuroprostheses: neural interfaces implants in animal and human models, neural modeling, and processing of the peripheral nervous system and the central nervous system signals for understanding neural control.

Xavier Navarro received the M.D. and Ph.D. degrees in medicine from the Universitat Autnoma de Barcelona, Barcelona, Spain, in 1978 and 1985, respectively.

He completed his speciality training in neurology at the University of Barcelona, and in Neurophysiology at the University of Minnesota while holding a Fulbright Fellowship from 1986 to 1988. Since 1999, he has been Full Professor of Physiology at the Universitat Autnoma de Barcelona. Since 1989, he has led the research group on Neuroplasticity and Regeneration of the Institute of Neurosciences. He is also Scientific Advisor of the Institute Guttmann for Neurorehabilitation. His research interests focus on axonal regeneration, functional restitution after neural injuries, neuroprostheses, spinal cord injury, and peripheral neuropathies. He has published many articles in these areas of the neurosciences.