Journal of Electromyography and Kinesiology 23 (2013) 1044–1051

Contents lists available at ScienceDirect

Journal of Electromyography and Kinesiology

journal homepage: www.elsevier.com/locate/jelekin

Comparison of electromyographic signals from monopolar current and potential amplifiers derived from a penniform muscle, the gastrocnemius medialis

Vinzenz von Tscharner [a,*], Christian Maurer [a], Florian Ruf [b], Benno M. Nigg [a]

[a] Human Performance Laboratory, Faculty of Kinesiology, University of Calgary, Calgary, AB, Canada
[b] Rheinauer Ring 20, 76437 Rastatt, Germany

ARTICLE INFO

Article history:
Received 13 December 2012
Received in revised form 25 June 2013
Accepted 9 July 2013

Keywords:
Trans-impedance amplifier
Electrode arrays
Pinnate muscle
Pennate muscle
Spatial resolution

ABSTRACT

Electromyograms (EMGs) are measured by bipolar surface electrodes that quantify potential differences. Bipolar potentials over penniform muscles may be associated with errors. Our assumption was that muscle activity can be quantified more reliably and with a higher spatial resolution using current measurements.

The purpose of this work is: (a) to introduce the concept of current measurements to detect muscle activity, (b) to show the coherences observed over a segment of a typical penniform muscle, the gastrocnemius medialis where one would expect a synchronicity of the activation, and (c) to show the amount of mixing that is caused by the finite inter electrode resistance.

A current amplifier was developed. EMGs were recorded at 40% of maximum voluntary contraction during isometric contractions of the gastrocnemius medialis. EMGs of twelve persons were recorded with an array of four peripheral and one central electrode. Monopolar EMGs were recorded for "all-potential", "center at current" and "all-current" conditions. Coherence revealed the similarity of signals recorded from neighboring electrodes.

Coherence was high for the "all-potential", significant for the "current at center" condition and disappeared in the "all-current" condition.

It was concluded that EMG array recordings strongly depends on the measurement configuration. The proposed current amplifier significantly improves spatial resolution of EMG array recordings because the inter-electrode cross talk is reduced.

© 2013 Elsevier Ltd. All rights reserved.

1. Introduction

Muscle activity is associated with electrical phenomena in the muscle fibers. EMG-potential differences are measured by bipolar surface electrodes using high impedance amplifiers which supposedly do not affect the buildup of the potentials at the surface of the skin. However, the primary goal of muscle activation is not to generate a potential at the surface of the skin. Large arrays of up to 128 electrodes offer an insightful way of observing potentials reflecting local muscle activation pattern (Zwarts et al., 2000; Farina et al., 2010). The bipolar recording methods are well established and worked well on muscles that have a typical belly like structure (Barandun et al., 2009). The view is that the muscle belly of fusiform muscles lies between the two tendons and that there is an innervation zone somewhere in the middle. In these situations the bipolar electrodes are placed between the innervation zone and the muscle tendon interface. When such an optimal electrode placement is achieved and there are more than two bipolar electrodes in line one can measure the time delay of the EMG signal and use the result to compute the conduction velocity. The analysis of coherence is one possible method to assess the similarity and the time delay of two or more signals (Rosenberg et al., 1989; von Tscharner and Barandun, 2010). Coherence was used in this study to assess the similarity of monopolar EMGs. While studying coherence of EMG-potentials we realized that inter electrode resistance may cause the signals from different electrodes to get mixed. A possible solution to the mixing of signals may be to measure EMG-currents. The model below is needed to pursue this idea.

1.1. Description of the model used for discussing the hypotheses and results

A model was developed to estimate the effect of the inter-electrode resistance and to show the concept encompasses two

* Corresponding author. Address: Human Performance Laboratory, University of Calgary, 2500 University Drive NW, Calgary, Alberta T2N1N4, Canada. Tel.: +1 403 9493714.

E-mail address: tvvon@ucalgary.ca (V. von Tscharner).

1050-6411/$ - see front matter © 2013 Elsevier Ltd. All rights reserved.
http://dx.doi.org/10.1016/j.jelekin.2013.07.011

interacting parts, a signal generating (gray shaded area in Fig. 1) and a signal amplifying part.

The signal generating part is based on the fact that MUAPs are generated by sodium and potassium currents which generate electrochemical potentials and currents in the connective tissue. The process of how the charges were driven towards the skin by the electrochemical potential has not been modeled. All that is relevant for the present model is that a part of this current will result in charges that reach the area under the electrode.

Normally the charges return to reference ground via Z-Body (Fig. 1) and thereby generate a potential according to Ohm's law. Z-Body represents the impedance between the measurement electrode and the system ground. Z-Body contains a capacitive component which causes Z-Body to be a function of frequency. However, if a current amplifier is connected to the electrode the charges that arrive at the electrode are compensated by the current amplifier by injecting or extracting an equivalent amount of charges. The potential under the electrode remains at ground potential.

In our model two sources, I_1 and I_2, represent the current flowing to two measurement electrodes. If there is a potential difference between the two measurement electrodes a current will flow across R-Skin. For commonly used inter electrode distances the resistor can be viewed as a combination of at least two transcutaneous, a subcutaneous and a skin surface resistor. They depend on skin humidity, skin preparation and sweat.

The signal amplifying part consists of two amplifiers. They can be potential amplifiers or current amplifiers that inject or extract currents in such a way as to keep the potential at the electrode at ground level. The measured signals depend on three possible combinations of amplifiers.

1.1.1. Model for mixed potential and current amplifiers

The high impedance potential amplifier draws only negligible current. The current amplifier can be considered as a source injecting or extracting current that arises at the surface of the skin and imposes that the potential at electrode$_2$ always remains at ground potential (Fig. 1). Therefore there is no current across Z-Body$_2$ and one can compute the potential generated at electrode$_1$.

$$U_1 = I_1/(1/\text{Z-Body}_1 + 1/\text{R-Skin}) \quad (1)$$
$$U_2 = \text{ground potential}$$

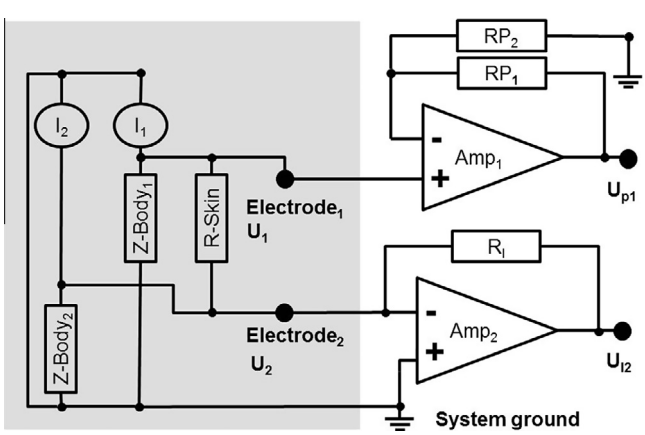

Fig. 1. (a) gray shaded area; Electronic model of the a signal generating part showing two current sources (I_1 and I_2) representing the part of the currents that are produced by the muscle that arrive at two separate electrodes. Z-Body represents the impedance from the area under the electrodes to the reference electrode which is equal to ground potential (System ground). R-Skin represents the overall inter electrode resistance. (b) Electronic model of the signal amplifying part showing a potential and a current amplifier. Electrode1 is connected to the potential amplifier. Electrode2 is connected to the current amplifier.

The potential is amplified by the potential amplifier (Amp$_1$ in Fig. 1, amplification factor α) to generate the measured potential, U_{p1}. In turn, U_1 and U_{p1} are independent of I_2. The output potential, $U_{I2,}$ which is obtained at the output of the current amplifier (Amp$_2$ in Fig. 1), is

$$U_{I2} = (I_2 + U_1/\text{R-Skin}) \cdot \text{-R}_I, \quad (2)$$
$$U_{I2} = (I_2 + I_1/(1 + \text{R-Skin/Z-Body})) \cdot \text{-R}_I,$$

R_I is the feedback resistor of the trans-impedance amplifier that converts the current to voltage. The mixing depends on the ratio between R-Skin and Z-Body. Because the ground electrode is further away than the second electrode one can assume that R_Skin/Z-Body is below 1. Thus the model shows that the potential U_{I2} is always a mixture of the signals detected by both electrodes.

1.1.2. Model for two potential amplifiers

If the current amplifier (Fig. 1) is replaced by a potential amplifier then the following potentials arise at electrode$_1$ and electrode$_{2.}$

$$U_1 = (I_1 + I_2 \cdot 1/(1 + \text{R-Skin/Z-Body})) \cdot a/(1 - 1/\text{R-Skin}^2 \cdot a^2) \quad (3)$$
$$U_2 = (I_2 + I_1 \cdot 1/(1 + \text{R-Skin/Z-Body})) \cdot a/(1 - 1/\text{R-Skin}^2 \cdot a^2)$$

with

$$a = (\text{Z-Body} \cdot \text{R-Skin})/(\text{Z-Body} + \text{R-Skin}).$$

Both potentials are mixtures of I_1 and I_2. The difference $U_1 - U_2$ is proportional to the difference $I_1 - I_2$.

1.1.3. Model for two current amplifiers

If both amplifiers are current amplifier then the output potentials are:

$$U_{I1} = I_1 \cdot \text{-RI} \quad (4)$$
$$U_{I2} = I_2 \cdot \text{-RI}$$

The potentials are not mixtures of the signals I_1 and $I_{2.}$ The potentials at both electrodes are forced to remain at ground potential and there is no current across R-Skin and Z-Body. Because Z-Body has a capacitive component, it is likely that the current amplifier may detect higher frequency components than a potential amplifier.

1.2. Reasoning for using current amplifiers

(i) The limitations imposed by currently available methodologies for EMG recording:

Skin resistance between two measuring electrodes always cause a problem. Because currents flowing across inter-electrode resistance are unavoidable it was mostly ignored. The previous believe of the authors and of many researchers who use bipolar EMG potential amplifiers was that inter electrode resistance marginally affect the EMG signal, a believe that was very convenient but has, to our knowledge, not been sufficiently considered, validated or challenged. Our model will show that this resistance causes two neighboring electrodes to record a mixture of the signals generated by the muscle activity under each electrode. The resistance is most likely to cause the signals from neighboring electrodes to show very similar signals even when the underlying signals are independent. This causes false interpretations of EMG signals especially about the territory of synchronized muscle activity.

(ii) How these limitations might be circumvented by the new methodology:

Current measurements are proposed as alternative to measuring EMG-potentials. Considering Ohm's law one could expect

similar information about the muscle activation when measuring currents instead of potentials, When measuring currents from both electrodes there is no more potential difference. Thus inter-electrode resistance is not a problem anymore. Measuring current may prevent us from drawing wrong conclusions based on artifacts introduced by inter-electrode resistance.

(iii) How is the monopolar current measured by the current amplifier related to electro-physiological events triggering muscle contraction?

It took decades to understand the electro-physiological events triggering muscle contraction. On the macroscopic level, the muscle contraction is not hampered by grounding the skin surface e.g. while swimming or washing hands. The skin surface potential is a secondary effect of muscle activation and therefore most models of EMG signal start by assuming an unaffected central current source at the level of the muscle fiber membrane. Thus measuring current has no obvious feedback influence on the electrophysiological events in the muscle fibers. In other words one can confidently assume that measuring current does not change the electro-physiological events.

1.3. EMG measurements on penniform muscles

Bipolar skin mounted electrodes over penniform muscles provide a signal that may be associated with errors caused by the inter-electrode resistance. A penniform muscle has a specific arrangement of end-plates (Dekhuijzen et al., 1986; Galvas and Gonyea, 1980). Bipolar EMG-potentials recorded over penniform muscles reveal local potential differences indicating muscle activity. Because of the penniform anatomy the interpretation is not straight forward (Dimitrova et al., 1999; Mesin et al., 2011). We expect that the signals are predominantly independent of one another. EMG signals over a segment of a typical penniform muscle, the gastrocnemius medialis, indicated that the segments that showed synchronicity were a few centimeters in diameter (Vieira et al., 2010, 2011; English et al., 1993). However, in our view a signal at the electrode, where the fiber is close, is much bigger than a signal that is caused by the same fiber under the other electrode, where the distance to the electrode is much larger. Thus the potential difference may be dominated by the monopolar signal recorded from one end of the fibers. Bipolar EMGs may therefore be corrupted (mixed) by inter-electrode skin resistance. The best one can do is to use a monopolar EMG signal (Vieira et al., 2010). However, even differences between monopolar signals may be affected by the skin resistance.

1.4. Purpose and hypotheses

The purpose of this work is (a) to introduce the concept of current measurements to detect muscle activity, (b) to show the coherences observed over a segment of a typical penniform muscle, the gastrocnemius medialis (Vieira et al., 2010; English et al., 1993) where one would expect a synchronicity of the activation (Vieira et al., 2011) and (c) to show the amount of mixing that is caused by the finite inter electrode resistance.

The above considerations lead to the hypothesis that muscle activity can be quantified using current measurements. When measuring with current amplifiers Eq. (4) holds and one can deduce that the potentials U_{I1} and U_{I2} will be uncorrelated if I_1 and I_2 are independent and we hypothesized that on a strongly penniform muscle the two signals may be fairly independent. However, measuring with a combination of potential and current amplifiers or with only potential amplifiers will lead to coherent signals. According to the model the interpretation of such a result would mean that the independent currents from different fibers are mixed when a potential amplifier is used.

A compelling argument for measuring currents is the independence of the results from Z-Body and R-Skin. Specifically, if the two monopolar signals measured with potential amplifiers are correlated one cannot conclude that the muscle segments under the two electrodes are activated in synchrony. Thus measurements of EMG-currents are essential when investigating the synchrony between segments of the same muscle.

2. Methods

2.1. Subjects

Twelve healthy, physically active, recreational athletes participated in this study (5 female, 7 male; age 26 ± 6 years, mass 68 ± 14 kg, height 173 ± 10 cm, mean and SD). Their median activity level was 4 h per week, with the 1st quartile = 2.0 and the 3rd quartile = 5.75 h per week. All gave written informed consent in accordance with the University of Calgary's policy on research using human subjects. The protocol was approved by the Conjoint Heath Research Ethics Board at the University of Calgary.

2.2. Electrode arrangement

Skeletal muscles are functionally divided into individual functional compartments (Vieira et al., 2010; Danion et al., 2002; English et al., 1993). The gastrocnemius muscle consists of multiple anatomically separated areas (Shin et al., 2009). One compartment showing simultaneous muscle activation is its distal part (English et al., 1993; Vieira et al., 2010). An array of five Ag/AgCl electrodes (Norotrode dual electrodes, Myotronics-Noromed Inc., Kent, WA, US) formed the quinta electrode array and was placed on this distal part of the medial gastrocnemius Furthermore, the area and alignment of the fibers was observed by ultrasound measurements to make sure that the pennation angle was significant in this area. Electrodes were attached to the skin after shaving and washing the area with alcohol. One electrode was placed at the center of the array; the others were placed at a distance of 20 mm in the proximal, lateral, distal and medial direction, thus forming a square around the center electrode. A single, common reference ground electrode was secured to the tibial tuberosity.

2.3. Signal recording and amplification

EMG-potentials were quantified using a monopolar configuration (Potential amplifiers and data acquisition system (Biovision, D-61273 Wehrheim, Germany). The signal was amplified 1000 times and band pass filtered between 10 and 500 Hz. EMG-currents were recorded by purpose built current amplifiers (Fig. 1 and circuit shown in the Appendix A). The resistor (R_I) that converts the current to volts was 500 kOhm and may be increased when measuring smaller muscles. A high pass filter in the input stage with a 10 Hz cut off frequency was required to eliminate electrode material dependent DC components (Appendix A). The system ground was placed on the tibial tuberosity. The output of the first stage was low pass filtered (500 Hz) and amplified before it was feed into the A/D converter and recorded at 2400 samples/s on a netbook.

2.4. Experimental procedure

Subjects were seated on a Biodex machine with the right leg stretched forward and performed isometric contractions of the gastrocnemius. The right foot was plantar flexed (5 degree) and attached to the lever. After a warm up phase, subjects performed 3

maximal voluntary contractions (MVC). The maximal torque output was determined within a window size of 50 ms around the maximum.

Five minutes later the measurements started. Three series with five repetitions were recorded at a torque level of 40% of the subject specific maximal torque. Repetitions were successful if a constant torque level (±5%) could be held for 3.5 s. The series were performed with different configurations of amplifiers.

- "all-potential" EMG-potentials measured on all five electrodes.
- "current at center" Potential amplifiers on the peripheral electrodes. Current amplifier on the center electrode.
- "all-current" Current amplifiers on all five electrodes.

The six different permutations of the configurations were randomized and the time between trials and series was 20 s and 3 min, respectively.

2.5. Signal processing

A signal encompassing 2^13 points (3.41 s) was selected, low pas filtered using the filter function below, eliminating the power of the signal above 395 Hz.

$$\text{Filter}\ (f) = 1 - e^{((1-\frac{f}{fc}+\ln\frac{f}{fc}))*0.3*fc} \quad \textit{for } f \geqslant fc$$

where fc represents the cut off frequency (fc = 395 Hz). This filter has the advantage that the signal remains unaltered (no role off) in the frequency below fc (von Tscharner and Schwameder, 2001).

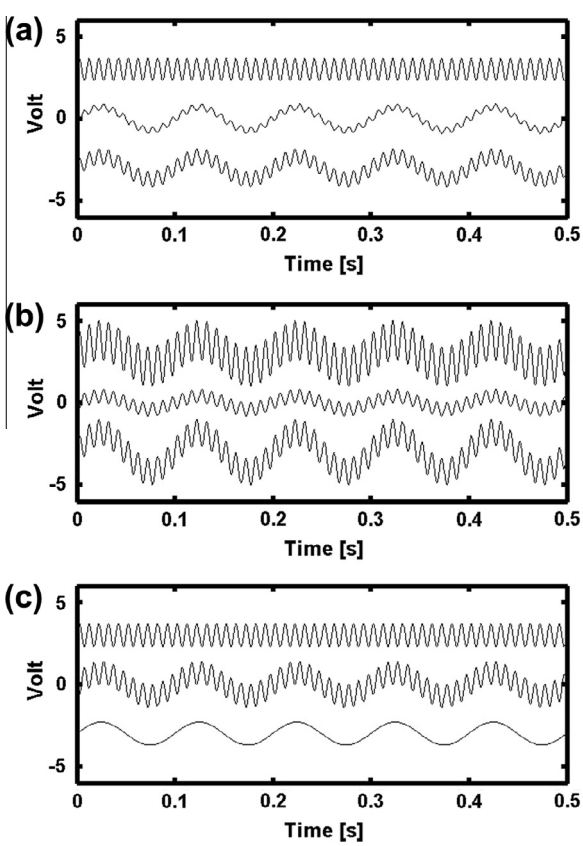

Fig. 2. Simulation of the signals obtained according to the Eqs. (1)–(4) for: (a) the mixed mode using a potential amplifier on electrode$_1$ and a current amplifier on electrode$_2$, (b) using two potential amplifiers, and (c) using two current amplifiers. The top lines are from channel 1 offset by 3 V, the bottom lines are from channel 2 offset by −3 V and the center line represents the difference.

Signals were displayed in a range of 10–350 Hz, which contained over 95% of the power. The 60 Hz (40 points per cycle) line frequency contamination was extracted from the signal as follows and removed from the signal. The first 8160 points of the band pass filtered signal were rearranged in matrices of size 40 × 204. Each column represented a vector containing the signal recorded during one cycle of the line frequency. The vectors of the filtered signals were averaged and normalized to obtain the normalized line frequency vector. The vectors of the signal were projected onto the normalized line frequency vector and the resulting factors were averaged. The line frequency contamination consisted of 204 sequences of the normalized line frequency vector multiplied by the averaged factors. The line frequency contamination was subtracted from the signal.

The power spectrum, the coherence and the frequency dependent phase shifts of the EMG signal were obtained by a coherence analysis (Rosenberg et al., 1989; von Tscharner and Barandun, 2010). The EMG signal was subdivided into 16 periods of 256 points and the Fourier transforms were computed. The power spectrum was obtained by averaging the power spectra and the coherency between EMG signals by averaging the normalized cross spectra. The coherence is the norm of the coherency squared. Coherence is a measure for the similarity (correlation) of the shape of the two signals irrespective of the amplitudes and phase shift of the two signals. Coherence was deemed statistically significant at the 95% level of confidence if it was larger than

$$\text{limit} = 1 - (1-\alpha)^{(\frac{1}{L-1})},$$

where L represents the 16 periods. A dashed line indicating this limit is shown at the bottom of the figures showing coherence. The PSD and the coherence were averaged across the 5 repetitions.

3. Results

3.1. Result from the model computation

To illustrate the model computation I_1 (100 Hz) and I_2 (10 Hz) and clearly show the mixtures, sinusoidal signals of 1 mA were used. Z-Body was 20 kOhm, R-Skin was 10 kOhm and R_I was 7 kOhm. The model for mixed potential and current amplifiers yielded the 100 Hz signal (Fig. 2a top line) for the potential amplifier whereas the current amplifier yielded a mixture of the 100 Hz and the 10 Hz signals. The difference is therefore a mixed signal. The model for two potential amplifiers yielded a mixed signal for both channels (top and bottom trace). The factor (1/(1 + R-Skin/Z-Body) in Eq. (3) is always between 0.5 and 1 if R-Skin is smaller

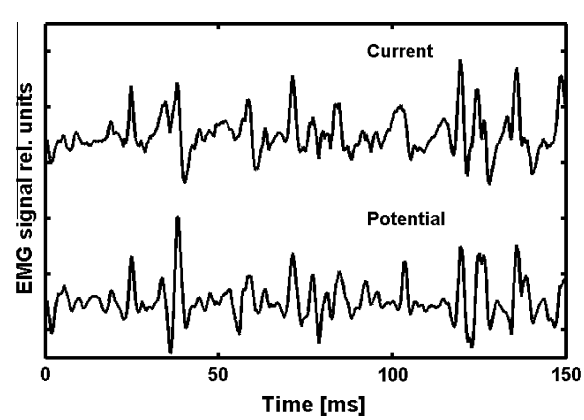

Fig. 3. Comparison of simultaneously recorded EMG current measured at the center electrode (top) and EMG potential measured at the proximal electrode in a current at center configuration (bottom) for one arbitrarily selected trial for one subject.

than or equal to Z-Body, whatever the absolute values are. By forming the difference the common modes are eliminated and the resultant signal was small and represents a mixed signal (center trace). The model for two current amplifiers showed the 100 Hz signal in channel#1 and the 10 Hz signal in channel#2. The signals were not mixed. The mixture only occurs when forming the difference.

3.2. Result from the quinta electrodes

A visual comparison of the signals of EMG-currents measured at the center electrode in a "current at center" configuration with the EMG-potentials measured at the peripheral electrodes showed that they were very similar (Fig. 3). The current signal distinctly showed aspects from the potential measured with the proximal electrode.

The power spectra (normalized to energy = 1) of the EMG-current and EMG-potential (Fig. 4) showed that more than 95% of the power accumulated in the range from 10 Hz (3 dB point of the filter included in the recording equipment) to 350 Hz. They were not significantly different when recorded from the five different electrodes. They were therefore displayed as averaged power spectra of the five electrodes whereby each of the five power spectra consisted of the mean power spectra of all trials of all subjects. The standard deviation of the averaged five power spectra was indicative of the narrow range covered by the individual spectra (gray shaded area in Fig. 4a and b). The spectra of the five electrodes were very similar, whether measured with potential or current amplifiers. The relative differences between the mean power spectra measured with the potential and current amplifiers with respect to the power obtained by the potential amplifier for the mid frequency range, from 37 Hz to 250 Hz, were smaller than ±10% (Fig. 4c). The current amplifier recorded more low frequency power for the "low frequency range" below 37 Hz. In the "high frequency range" above 250 Hz, the current amplifier picked up more power than the potential amplifier. Percent wise, the additional power for the EMG-current amounts to almost 30% more power than when measuring the EMG-potential.

The similarity of the signals (Fig. 3) was confirmed by the coherence analysis (Fig. 5). The mean coherence over all subjects for the all-potential condition was above 0.5 within the "mid frequency range" and was much larger than the limit of significance (0.18) indicated by the dashed line. In contrast, for the all-current configuration the coherence was significantly lower and the values were around the statistical limit (Fig. 5a, bottom trace). Thus the currents, in the all-current configuration, reflected almost non-correlated EMG-currents between the center and peripheral electrodes whereas the EMG-potentials, in the all-potential configuration, reflected highly correlated signals. Similar results were obtained for the coherence measured between neighboring peripheral electrodes (Fig. 5b). Again, the EMG-currents for the all-current configuration reflected almost uncorrelated signals whereas the EMG-potentials in the current at center configuration still reflected significantly correlated shapes of the EMG signals.

The coherence between EMG-potentials of neighboring peripheral electrodes in the all-potential configuration is lower than between the center electrode and the peripheral ones (Fig. 5a and b, dash-dotted line). The coherence further decreased when the center electrode was changed to a current at center configuration, indicating that the signals were less correlated by actively grounding the center electrode (Fig. 6).

For the current at center configuration, the coherence between the EMG-current and the EMG-potentials of the peripheral electrodes was not very different from the coherence measured among neighboring peripheral EMG-potentials (Fig. 7). This indicates that the EMG-current was not uncoupled from the peripheral EMG-potentials. The lowest correlation only occurred in the all-current configuration.

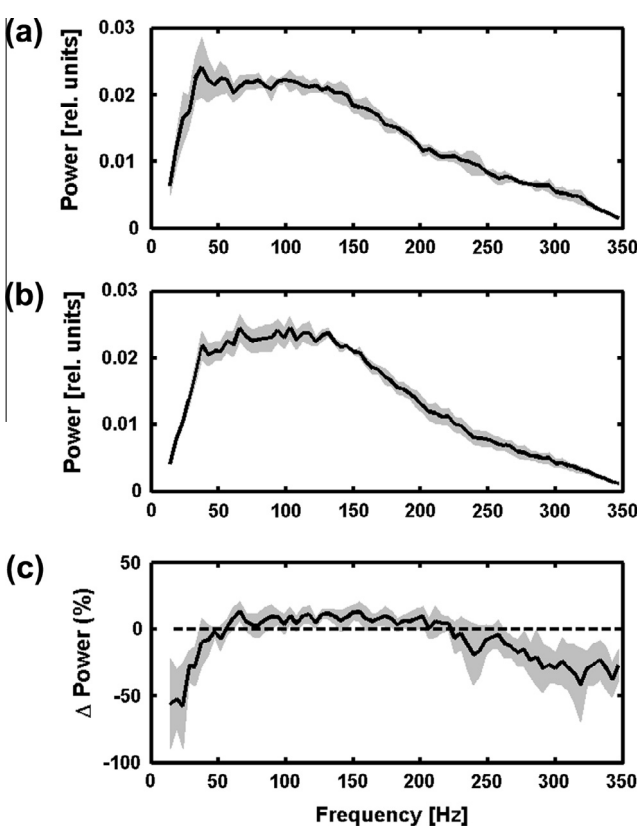

Fig. 4. Power spectra averaged over 60 trials (5 trials 12 subjects, normalized to energy = 1) displayed as: (a) Mean of EMG currents measured in the all current configuration. (b) Mean of EMG potentials measurements in the all potential configuration. (c) Relative difference of mean power spectra (100% • (all potential – all current)/all potential). Gray shaded areas indicate the range covered by the standard deviation of the averaged signals from the five electrodes.

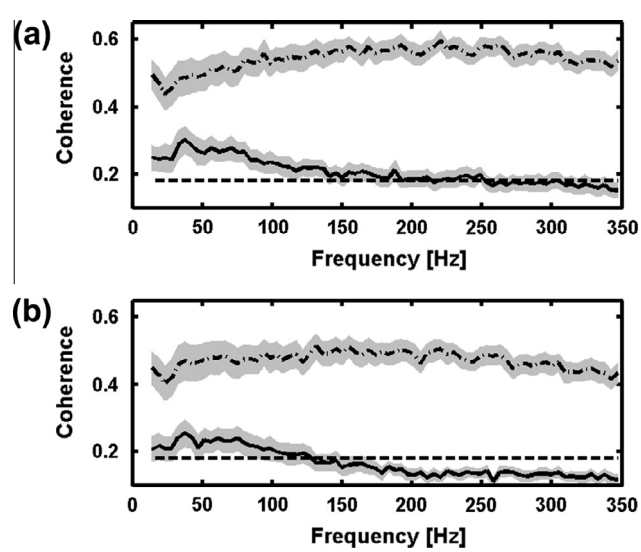

Fig. 5. Coherence measured for the all potential configuration (upper traces) and the all current configuration (lower traces). The gray areas represent the standard error obtained by averaging the mean of the trials of 12 subjects. (a) Coherences between the center electrodes and the peripheral ones. (b) Coherences between 4 neighboring peripheral electrodes.

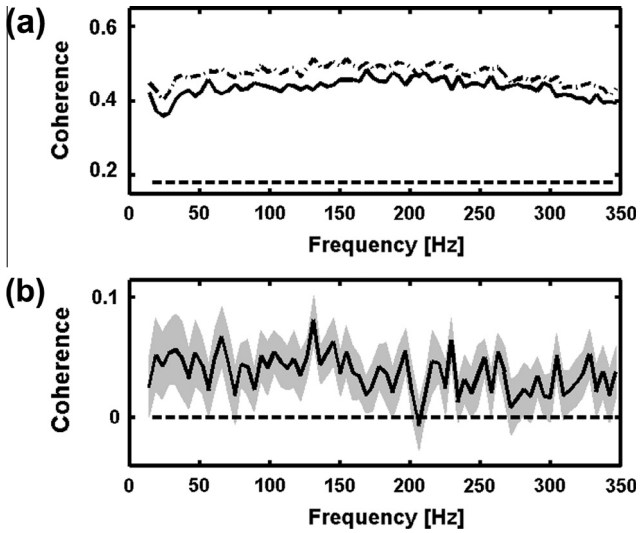

Fig. 6. (a) Average coherence among EMG potentials measured between neighboring peripheral electrodes in the all potential configuration (dash dotted upper trace) and the current at center configuration where the center is actively set to ground potential (solid line). (b) The solid line shows the difference between the coherences displayed in a). The gray areas represent the standard error of the differences obtained by averaging the mean of the trials of 12 subjects.

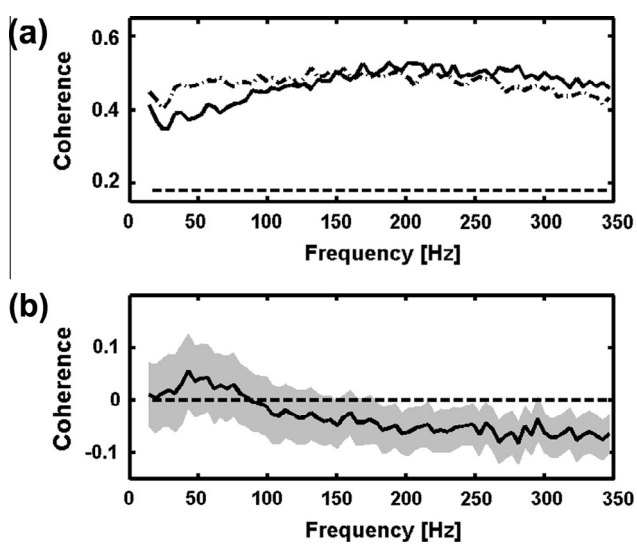

Fig. 7. Coherence between electrodes in the "current at center" configuration. (a) Average coherence between neighboring peripheral electrodes (dash dotted line) and averaged coherence between the center and the peripheral electrodes (solid line). (b) Difference between the coherence towards the center current electrode and the coherence among neighboring peripheral electrodes (dash dotted line – solid line shown in a). The gray area represents the standard error of the differences.

4. Discussion

This study showed that muscle activity can be quantified using EMG-currents with a monopolar current amplifier connected to a typical, penniform muscle, the gastrocnemius medialis. Pilot measurements in our laboratory showed similar results for the gastrocnemius lateralis muscle. To our knowledge, current has never been considered as a measure for muscle activity and, consequently, there are no comparisons to the presented results.

The main feature of a current amplifier is that it actively grounds the area under the electrode. The measurements made by an all-current configuration indicated that the signals under the electrodes were not strongly correlated (low coherence) revealing that these signals were mostly uncoupled and thus independent, especially at frequencies above 120 Hz (Fig. 4). Our interpretation is that the signals that arise from the areas under the electrodes were predominantly obtained from independently controlled muscle fibers and/or non-synchronized motor units. This interpretation is based on the additional, most likely assumption that measuring currents does not scramble or disrupt the signals to the point that they are not coherent anymore. A model of such a synchronized activation was discussed earlier showing various possibilities to explain synchronously activated areas (Vieira et al., 2011). The all-current measurements showed that dominant part of signals from electrodes that were 20 mm apart, either around the periphery or towards the center, were not significantly correlated, however, because the coherence was not absolute zero one cannot exclude that occasional motor units cover larger territories. This result is in contrast to the results of another study (Gallina et al., 2011) that suggested that the signals were generally correlated over centimeters along the proximal distal direction of the gastrocnemius muscle. Our results from the all-potential configuration showed a similar range of correlated signals (a circle of 12.5 cm^2 or a length of 4 cm along the muscle). This is a clear indication that there was an intra-electrode cross talk between electrodes which was caused by the low resistance between the electrodes. The common mode could also encompass signals from distant, large muscles (Cescon et al., 2011). This kind of common mode signal has not yet been considered in the analysis. As stated by others, pairs of surface electrodes positioned on MG or LG unlikely provide representative recordings of general muscle activity (Vieira et al., 2010). Because the coherence was not 1 in the all-potential configuration, this crosstalk is only partial. It is, however, sufficiently large that in a bipolar setup at least half the signal is eliminated by the common mode rejection. Which part of the signal is eliminated and whether this affects the spectral properties is unknown. The part that is usually not eliminated was sufficient in a very large number of studies that timed the muscle activation and reported amplitude fluctuations.

In a current at center configuration there was a similar coherence between the center electrode and the peripheral ones as between the neighboring, peripheral ones (Fig. 7). This is only possible if a current is flowing from the peripheral locations towards the center. The current can be suppressed by grounding the peripheral electrodes (Fig. 4). A single electrode connected to a current amplifier will therefore measure charges from a larger area than the one covered by the electrode, unless the surrounding is grounded, preventing these lateral currents. One possibility would be to use circular electrodes as discussed by Farina and Cescon (2001) and ground the outer circle. Furthermore, the coherence between signals from the peripheral EMG-potentials did not disappear when the center electrode acted as an active ground. Thus, an array of electrodes connected to current amplifiers may lead to a much higher spatial resolution than the resolution that can be expected from classical EMG-potential measurements.

The signals recorded in a current at center configuration by potential amplifiers and by the current amplifier were almost identical (Figs. 3 and 7). The spectra (Fig. 5) provide additional support that the signals were almost identical and that the current amplifier resolved similar spectral properties. However, the current amplifier seems to be slightly more sensitive to higher frequencies. This can be a result of the capacitive component of Z-Body. This aspect needs further research.

If the EMG-currents under all five electrodes are not coherent one cannot confidently apply a model of a tilted volume conductor (Dimitrova et al., 1999; Mesin et al., 2011).

This study represents a first attempt to measure and interpret EMG-current. A limiting factor was that the currents and potentials cannot be measured simultaneously at the same electrode. Furthermore, not all properties have been studied at this point. It is not yet clear how the potentials surrounding the electrode that measures the current should be controlled however, it is clear that the measured currents are affected by the surrounding potentials. A very delicate issue is the position of the ground electrode. Currents flow towards a reference potential and an absolute stable, not too distant reference ground, with a high capacity to accept charges is essential. It is possible that the activity of other muscles alter the potential of the ground electrode. This would immediately lead to inter muscular crosstalk being picked up. Another limitation of this study was that one cannot infer about territories covered by some of the motor units. In this study a strong isometric contraction (40% MVC) was used to activate the muscle. At such a level of activation single motor units cannot be observed and it is therefore impossible to exclude that occasionally some motor units cover larger territories.

A further concern was raised that common mode signals that are different than the line frequency contamination could be at the origin of the measured effect. A common mode signal is the result of a distant source that creates an identical potential with respect to the ground electrode at all recording electrodes. This inductive signal is present whether one measures potentials or currents. The common mode signal is present whether the muscle is activated or not. Thus if an additional common mode potential would have been induced it would generate a current through Z-Body and would therefore equally affect the current measurements. Furthermore, when we connected the amplifiers the power of the resting signal was very low compared to the EMG signal obtained at 40% MVC. Thus common mode signals with sufficient power to dominate the result were not present.

5. Conclusions

The muscle activity is reflected by the EMG-current as well as by EMG-potentials. Measurements of EMG-currents prevent the potentials of building up and thus suppress lateral currents causing inter-electrode crosstalk. One has to conclude that the measured EMG-current or EMG-potential strongly depends on controlling the surrounding potentials. With the aid of the proposed current amplifier one has a new tool that allows to significantly improve spatial resolution of arrays of electrodes.

Role of the funding source

Dr. Nigg is the founder and CEO of BRI and contributed in the writing of the manuscript and in the decision to submit the manuscript for publication.

Conflict of interest

There are no submitted patent applications and there are no conflicts of interests

Acknowledgements

We gratefully acknowledge the work of Stano, Andrzej from our electronic workshop for the development and construction of the current amplifier and to Biomechanigg Research Ltd. (BRI) for providing the material.

Appendix A.

Circuit of input stage of the current amplifier.

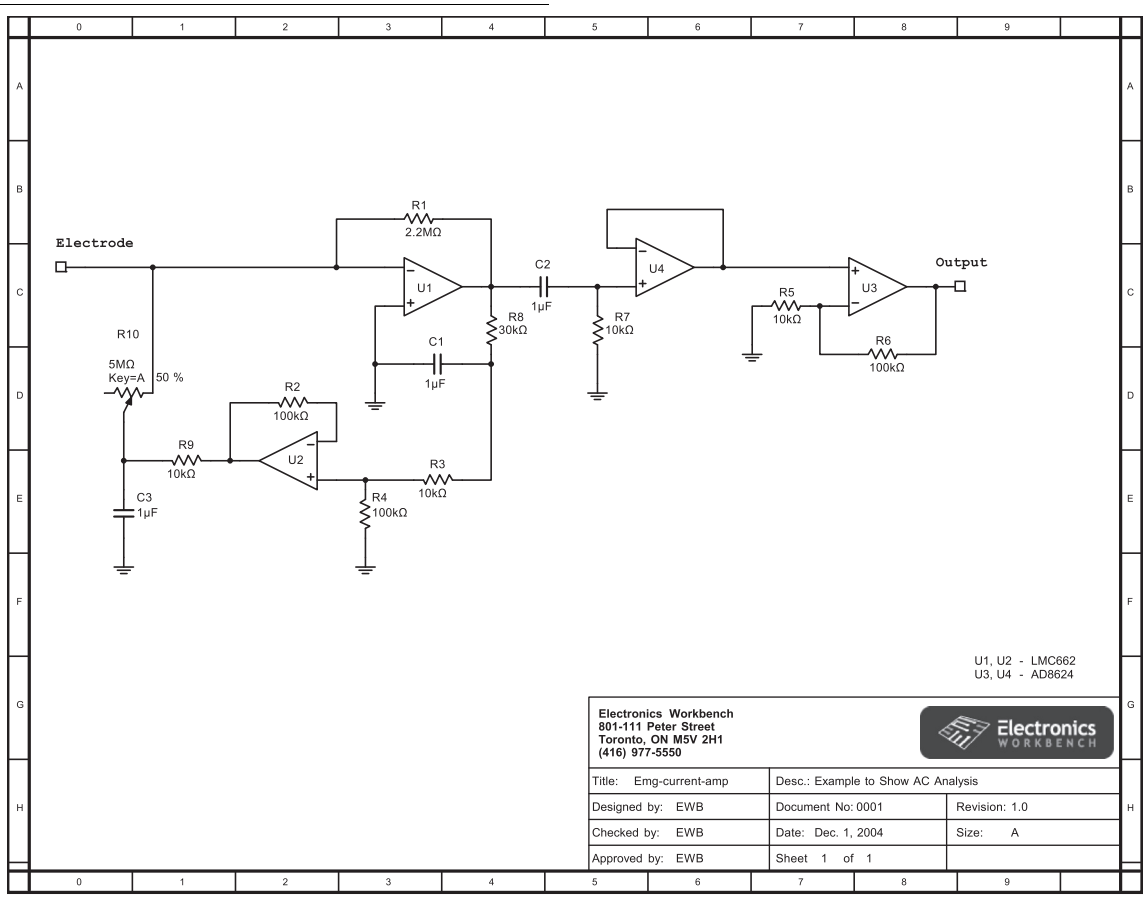

References

Barandun M, von Tscharner V, Meuli-Simmen C, Bowen V, Valderrabano V. Frequency and conduction velocity analysis of the abductor pollicis brevis muscle during early fatigue. J Electromyogr Kinesiol 2009;19(1):65–74.

Cescon C, Mesin L, Nowakowski M, Merletti R. Geometry assessment of anal sphincter muscle based on monopolar multichannel surface EMG signals. J Electromyogr Kinesiol 2011;21(2):394–401.

Danion F, Li S, Zatsiorsky VM, Latash ML. Relations between surface EMG of extrinsic flexors and individual finger forces support the notion of muscle compartments. Eur J Appl Physiol 2002;88(1–2):185–8.

Dekhuijzen AJ, van Koetsveld PA, Baan GC, Woittiez RD, Huijing PA. Motor endplate position of rat gastrocnemius muscle. Muscle Nerve 1986;9(7):642–7.

Dimitrova NA, Dimitrov AG, Dimitrov GV. Calculation of extracellular potentials produced by an inclined muscle fibre at a rectangular plate electrode. Med Eng Phys 1999;21(8):583–8.

English AW, Wolf SL, Segal RL. Compartmentalization of muscles and their motor nuclei: the partitioning hypothesis. Phys Ther 1993;73(12):857–67.

Farina D, Cescon C. Concentric-ring electrode systems for noninvasive detection of single motor unit activity. IEEE Trans Biomed Eng 2001;48(11):1326–34.

Farina D, Holobar A, Merletti R, Enoka RM. Decoding the neural drive to muscles from the surface electromyogram. Clin Neurophysiol 2010;121(10): 1616–23.

Gallina A, Merletti R, Vieira TM. Are the myoelectric manifestations of fatigue distributed regionally in the human medial gastrocnemius muscle? J Electromyogr Kinesiol 2011;21(6):929–38.

Galvas PE, Gonyea WJ. Motor-end-plate and nerve distribution in a histochemically compartmentalized pennate muscle in the cat. Am J Anat 1980;159(2):147–56.

Mesin L, Merletti R, Vieira TM. Insights gained into the interpretation of surface electromyograms from the gastrocnemius muscles: a simulation study. J Biomech 2011;44(6):1096–103.

Rosenberg JR, Amjad AM, Breeze P, Brillinger DR, Halliday DM. The Fourier approach to the identification of functional coupling between neuronal spike trains. Prog Biophys Mol Biol 1989;53(1):1–31.

Shin DD, Hodgson JA, Edgerton VR, Sinha S. In vivo intramuscular fascicle-aponeuroses dynamics of the human medial gastrocnemius during plantarflexion and dorsiflexion of the foot. J Appl Physiol 2009;107(4): 1276–1284.

Vieira TM, Merletti R, Mesin L. Automatic segmentation of surface EMG images: improving the estimation of neuromuscular activity. J Biomech 2010;43(11):2149–58.

Vieira TM, Loram ID, Muceli S, Merletti R, Farina D. Postural activation of the human medial gastrocnemius muscle: are the muscle units spatially localised? J Physiol 2011;589(Pt 2):431–43.

von Tscharner V, Schwameder H. Filtering of force variables in skiing by specified wavelet analysis. In: Erich Mueller, editor. Science and Skiing II, ISBN 3-8300-0287-1 and -4, Hamburg: Verlag Dr. Kovac GmbH, Germany; 2001. p. 55–68.

von Tscharner V, Barandun M. Wavelet based correlation and coherence analysis reveals frequency dependent motor unit conduction velocity of the abductor pollicis brevis muscle. J Electromyogr Kinesiol 2010;20(6):1088–96.

Zwarts MJ, Drost G, Stegeman DF. Recent progress in the diagnostic use of surface EMG for neurological diseases. J Electromyogr Kinesiol 2000;10(5):287–91.

Vinzenz von Tscharner was born in Switzerland 1947. He received his diploma in applied physics and mathematics 1974 and his Ph.D. degree in biophysics at the University of Basel, Switzerland. He was a post doctorate fellow at Oxford University, Dep. Biochemistry, England in 1978 and 1979, and a post doctorate fellow at Stanford University, Dep. Biochemistry, California, USA in 1980. He returned to the Biocenter in Basel 1981. He was then research affiliate at the Theodor Kocher Institute in Bern and specialized in signal transduction studying cellular responses related to cytokin binding. He became Adj. Assistant Professor (1997) and Adj. Associate Professor (2000) at the Human Performance Laboratory, University of Calgary. His main field of research is the signal propagation controlling movement patterns of humans. This involves biophysical/biomedical measurements and the analysis of sensory systems.

Christian Maurer was born in Austria and studied physics at the University of Innsbruck, Austria. He received a diploma in experimental physics in 2004 and a PhD degree in 2010 from the University of Innsbruck, Austria. In addition he received a BASc degree in sport science in 2010 from the University of Innsbruck, Austria. His graduate work focused data acquisition and signal processing. He is currently a post-doctoral fellow at the Human Performance Laboratory, University of Calgary, where he is interested in the neural control of movements. He analysis movement patterns with respect to interventions, performance, fatigue and injury to find common pattern in the control mechanism of human locomotion.

Florian Ruf was born in Germany 1987, and studied mechatronics at the University of applied sciences in Karlsruhe, Germany. During his study, he worked as a research student in the field of biomechanics at the Human Performance Laboratory, University of Calgary. He received his Bachelor's degree in 2012 and is currently a Master's student in the Automotive Engineering department at the University of applied sciences in Ingolstadt, Germany.

Benno M. Nigg was born in Switzerland, and studied nuclear physics at the world renowned ETH in Zurich, Switzerland. In 1971, he switched to Biomechanics. His goal was to improve individuals' mobility and longevity through first, the study of forces impacting the lower body, and then the development of orthotics, running shoes, and exercise prescriptions that would enhance the quality of individuals' lives. He joined the University of Calgary as the founder and first director of the Human performance Laboratory in 1981. Since his arrival, he has built a team of about 180 co-workers that have positioned the Human Performance Laboratory with the elite biomechanics programs in the world. He has published more than 280 articles in scientific journals and authored or edited eleven books. He has received numerous international awards, including the prestigious Olympic Order for recognition of this outstanding service and accomplishments for the Olympic Movement.