Journal of Electromyography and Kinesiology 24 (2014) 881–887

Contents lists available at ScienceDirect

Journal of Electromyography and Kinesiology

journal homepage: www.elsevier.com/locate/jelekin

On the effect of thermal agents in the response of the brachial biceps at different contraction levels

Larissa Martins Garcia [a], Alcimar Barbosa Soares [b], Camila Simieli [a], Alessandra Vairo Peres Boratino [a], Rinaldo Roberto de Jesus Guirro [a,*]

[a] Department of Biomechanics, Medicine and Rehabilitation of the Locomotor System, Ribeirão Preto Medical School, University of São Paulo, Ribeirão Preto, SP, Brazil
[b] Faculty of Electrical Engineering, Biomedical Engineering Lab, Federal University of Uberlândia, Uberlândia, MG, Brazil

ARTICLE INFO

Article history:
Received 4 September 2013
Received in revised form 24 July 2014
Accepted 28 July 2014

Keywords:
Cryotherapy
Short-wave
Diathermy
Neuromuscular control
Electromyography

ABSTRACT

The objective of this study was to assess electromyographic features of the brachial biceps muscle after the application of cryotherapy and short-wave diathermy. Sixty healthy volunteers participated in the study and were equally divided into three groups: cryotherapy – application of ice packs for 30 min; short-wave diathermy for 20 min; and control. The thermal agents were applied to the anterior and posterior regions of the non-dominant arm. The electromyographic (EMG) signal from the brachial biceps was recorded before and after the application of thermal agents during flexion of the elbow joint at 25%, 50%, 75% of a maximum voluntary isometric contraction defined at least two days before the actual experiments ($MVIC_{bl}$). The volunteers also were asked to execute a free MVIC before and after the application of the thermal agents ($MVIC_{free}$). A linear regression model with mixed effects (random and fixed) was used. Intra-group analysis showed a reduction in root mean square (RMS) at $MVIC_{free}$, with no change in the median frequency of the EMG signal at any contraction level for the short-wave diathermy group. An increase on RMS values and a decrease on median frequencies were found after the application of cryotherapy for all contraction levels. The results imply that cryotherapy plays an important role on changing neuromuscular responses at various levels of muscle contraction. Therapists should be aware of that and carefully consider its use prior to activities in which neuromuscular precision is required.
© 2014 Elsevier Ltd. All rights reserved.

1. Introduction

In physiotherapy clinical practice, it is very common to use thermal agents, such as cryotherapy (CR) and short-wave diathermy (SWD), prior to performing exercises at different levels of muscular contraction.

The cryotherapy decreases skin and muscle temperature (Rupp et al., 2012) and when applied before exercises, may result in inadequate peripheral feedback on the position sense and may change biomechanical properties of the joint (Hopper et al., 1997; Uchio et al., 2003). SWD is a deep heat modality, which can reach the muscle tissue (Garret et al., 2000), but its effect on the mechanical function of active musculotendons is not well understood (Mitchell et al., 2008). If neuromuscular function is compromised in both treatments, injury may occur when exercise is performed (Khanmohammadi et al., 2011).

Most of the studies found in the literature assessed the effects of changes in temperature during a maximum voluntary isometric contraction (MVIC) (Dewhurst et al., 2010; Stewart et al., 2003; Pereira et al., 2010, 2011; Kimura et al., 2003; Cahill et al., 2011; Racinais et al., 2008; Madigan and Pidcoe, 2002), and few have evaluated those effects during submaximal contractions (Mitchell et al., 2008; Coulange et al., 2006; Meigal et al., 1998; Rubley et al., 2003; Oksa et al., 2002), which characterize the daily life activities.

Considering the scarcity of studies that relate the SWD with the electromyographic signal and the lack of proper findings on the changes of muscular response induced by changes in temperature prior to performing maximal and submaximal exercises, the authors decided to study the behavior of EMG features (signal amplitude and frequency response) of the brachial biceps muscle (BB) after the application of cryotherapy or short-wave diathermy at different levels of MVIC during flexion of the elbow joint. The hypothesis raised here is that the application of thermal agents can change electromyographic signal amplitude and frequencies of the BB in a broad range of contraction levels. Verifying such

* Corresponding author. Address: Ribeirão Preto Medical School, University of São Paulo, Avenida Bandeirantes 3900, CEP: 14049-900, Ribeirão Preto, São Paulo, Brazil. Tel.: +55 (16) 36024584; fax: +55 (16) 36024413.
E-mail address: rguirro@fmrp.usp.br (R.R. de Jesus Guirro).

http://dx.doi.org/10.1016/j.jelekin.2014.07.013
1050-6411/© 2014 Elsevier Ltd. All rights reserved.

hypothesis would be of great importance to current physical rehabilitation programs that usually associate CR with muscular training.

2. Materials and methods

2.1. Sample

Sixty-four university female volunteers were selected according to the following inclusion criteria: age 18–30 years old; body mass index (BMI) between 20 and 25 kg/m^2; no metabolic diseases, skin lesions or fractures in upper limbs; no contraindication for cryotherapy and/or SWD; and not being in premenstrual or menstrual period so that hormonal influence can be controlled (Dewhurst et al., 2005; Charkoudian et al., 1999). This project has been approved by the local Research Ethics Committee (protocol N.625/2009).

The volunteers were randomly and equally divided into three groups ($n = 20$): control group (CG), short-wave diathermy group (SWG) and cryotherapy group (CRG). Table 1 shows the anthropometric data and ages. Four volunteers left the study due to schedule incompatibility.

2.2. Instrumentation

2.2.1. Electromyograph

All instruments used in the study were carefully calibrated before data collection according to the instructions listed in the manufacturer's guide. In order to minimize possible power line interferences, all electronic devices were powered by a 12 V 40 Ah battery (Guirro et al., 2006). Before and during data collection the EMG signal was monitored via the software interface (Aqdados 7.02, Lynx® Tecnologia Eletrônica, São Paulo, Brazil).

The signal acquisition module (EMG-1000, Lynx® Tecnologia Eletrônica, São Paulo, Brazil) was connected to a netbook (Acer® Aspire One1Gb) by means of an optical fiber in order to minimize interference. Data collection was performed in an acclimatized room with controlled temperature (23 °C ± 2°) and illuminated with incandescent lamps.

The signal acquisition module has impedance of 10^9 ohms and 16-bit resolution, sampling rate of 2000 Hz, high-pass filter of 20 Hz and low-pass filter 1000 Hz.

EMG signals were captured by using a single differential surface sensor (Lynx® Tecnologia Eletrônica, São Paulo, Brazil) made of two silver bars of 10-mm length × 1-mm width each, positioned in parallel and separated by 10 mm. The sensor also had a 20× preamplifier circuitry (±1%), common mode rejection rate (CMRR) >100 dB, and signal noise rate <3 μV (RMS). The reference electrode was made of stainless steel with dimensions of 4 × 3 cm, positioned on the acromion of the homolateral limb with electroconducting gel.

Table 1
Age and anthropometric data for the control (CG), short-wave diathermy (SWG) and cryotherapy (CRG) groups ($n = 20$). Values expressed in terms of mean ± standard deviation.

	Age (years)	Height (cm)	Weight (kg)	BMI (kg/m^2)
CG	24 ± 3.83	1.65 ± 0.07	60.44 ± 7.52	22.07 ± 1.91
SWG	21.85 ± 2.13	1.65 ± 0.07	58.47 ± 7.15	21.51 ± 2.01
CRG	22.4 ± 2.28	1.64 ± 0.07	58.02 ± 6.77	21.56 ± 1.7

No significant differences were observed in anthropometric data and age between groups.

2.2.2. Force

The force was measured by means of a load cell (MM-50 Kratos®, São Paulo, Brazil), positioned perpendicularly between the distal third of the forearm and the floor.

2.2.3. Short-wave device

A thermowave device (BIOSET® – certified by ANVISA 10360310010, Brazil) was used for the application of short-wave diathermy operating at a frequency of 27.12 MHz, in continuous mode and maximum power of 200 W.

2.2.4. Temperature

The skin temperature over the brachial biceps muscle was recorded during data acquisition by means of a digital infrared thermometer (Incoterm®, Porto Alegre, Brazil).

2.3. Experimental procedure

After being submitted to the initial evaluation and included in the study, the volunteers were asked to perform maximum voluntary isometric contractions (MVIC) of the non-dominant flexor muscles, during which EMG and force were acquired simultaneously, in order to define the MVIC baselines ($MVIC_{bl}$) for each volunteer. The $MVIC_{bl}$ was defined by the average of six MVICs, performed during 6 s with 60 s interval, except between the third and forth repetitions, when the volunteer was allowed to rest for 5 min. The volunteers were verbally encouraged during the process. Data recording started 2 s after muscle contraction, when force levels were stable.

After a minimum interval of 48 h (Mitchell et al., 2008; Ruiz et al., 1993), the volunteers returned to the laboratory for the next stage of data collection (before and after the application of therapeutic agents).

To capture the EMG signals from the brachial biceps muscle of non-dominant arm, the sensor was positioned according to specifications defined by the SENIAM project (Hermens et al., 2000), fixed to the volunteer's skin with hypoallergenic tape (Micropore® TM) and wrapped with an elastic band to improve contact as well as minimize movement. The skin was prepared by means of trichotomy and cleaning with alcohol 70%. During data collection, the volunteers were positioned on a Bonet table with head and shoulders in neutral position, trunk stabilized with inelastic bands, elbow kept at 90° angle and rested on a support. The forearm remained in neutral position, with its mid-third involved by a cuff connected to the load cell perpendicularly to the floor.

The volunteers were first asked to perform too types of contractions: (a) isometric elbow flexion contraction at 25%, 50%, 75% of $MVIC_{bl}$, during which a visual force feedback was provided on a computer screen to help them maintain the required force levels; and (b) a free MVIC ($MVIC_{free}$). The order was randomly defined. Three contractions were required for each level of force.

The electromyographic (EMG) signal from the brachial biceps, the force and the temperature of the skin over the brachial biceps muscle were recorded before and after the application of the thermal agents.

Upon completion of the first set of data collection, the EMG sensor and the reference electrode were removed for the application of the therapeutic agent, except for the volunteers of the control group that remained at rest for 30 min. SWG volunteers were submitted to 20 min of short-wave diathermy, operating in a continuous and capacitive mode at 120 W (±10%), by means of two standard electrodes (18 × 13 cm), one being positioned on the brachial biceps and the other on the brachial triceps, both isolated from the skin by a rigid felt layer. SWG volunteers reported sensations of light to mild heat intensity. For the CRG volunteers, two plastic packs containing 1.5 kg of grinded ice each (Merrick et al.,

2003; Algafly and George, 2007) were placed on the brachial biceps and on the brachial triceps muscles for 30 min. The volunteers were positioned in dorsal decubitus on a wooden stretcher with their non-dominant limb in anatomical position for the application of the therapeutic agents (CR and CWD) or rest (control). Next, the EMG sensor and the reference electrode were placed again in the same positions as before, thanks to markings made with hypoallergenic pen on the skin, and a new set of data was collected (using the same protocol as for the first data set).

2.4. Data analysis

Quantitative analyses of the data were performed by using routines implemented in the Matlab®6.5.1 to calculate the RMS (μV) and the median frequency (Hz) of the EMG signal. The RMS values were normalized by the RMS of the $MVIC_{bl}$ and expressed as percentage of it (% $MVIC_{bl}$) (Clarys, 2000).

2.5. Statistical analysis

A linear regression model with mixed effects (random and fixed) was used for data analysis in which the results are grouped (measurements repeated for the same individual) and the assumption of independence between observations in the same group is not suitable (Schall, 1991). These models presuppose that the residues have normal distribution with zero mean and variance σ^2. Calculations were performed by using both SAS® 9.2 and R software at significance level of 5% ($p \leqslant 0.05$).

3. Results

As expected, a significant increase ($p < 0.05$) in the skin temperature was observed on the anterior region of the arm (measured over the brachial biceps) following the application of SWD (SWG – before = 31.2 ± 1.2 °C; after = 39.4 ± 0.8 °C) and a significant decrease ($p < 0.05$) in temperature was observed following the application of CR (CRG – before = 31.6 ± 11.4 °C; after = 11.3 ± 5.3 °C); whereas for the control group no significant changes in temperature were observed (CG – before = 32.1 ± 1.3 °C; after = 31.4 ± 1.2 °C).

The results also show no significant changes in the force generated by the volunteers when comparing the before and after sessions (CG – before: 15.2 ± 3.2 kgf, after: 14 ± 3.5 kgf; SWG – before: 14.1 ± 3.4 kgf, after: 13.3 ± 3.2 kgf; CRG – before: 14.1 ± 3.0 kgf, after: 13.9 ± 4.3 kgf), confirming the efficiency of the force feedback system.

Table 2 shows the RMS values of EMG signals collected from the brachial biceps muscle for the three groups at different contraction levels, before and after the therapeutic approaches. The control group shows no significant change in RMS between the two sessions (before and after). SWG shows a significant decrease in RMS only at $MVIC_{free}$ between the two sessions. CRG shows a significant increase in RMS at all levels of MVIC after the application of CR.

When comparing the RMS values of SWG and CG no difference was found at all levels of contraction after the application of thermal agent. The RMS values of CRG were found to be significantly higher than that for CG at all levels of MVIC after CR. Significantly higher values of RMS, after the application of therapeutic agents, were found for CRG at 75% of $MVIC_{bl}$ and $MVIC_{free}$ when compared to the same levels of contraction for the SWD group.

With regard to the median frequency (MF), as shown in Table 3, a significant decrease between the two sessions (before and after) was observed only for CRG, but at all levels of MVIC. No difference was found in MF values between CRG and CG. A significant decrease in the MF was found in the CRG compared to both CG and SWG after application.

4. Discussion

The results show that the application of SWD and CR were efficient in altering the skin temperature of the anterior region of the arm. However, only CR elicited a significant change in the amplitude and median frequency of the EMG signal of the brachial biceps, for all levels of contraction under study (submaximal to maximal), partially confirming our initial hypothesis.

Most of the studies in the literature consider the effects of temperature changes during maximum voluntary isometric contraction (MVIC). In this study, the authors decided to investigate those effects also for submaximal contraction levels, since they are associated with the majority of daily life activities and with basic therapeutic protocols in the physical therapy practice.

Our results show that SWD was only effective to promote changes at $MVIC_{free}$, with a reduction of the EMG RMS value after the application of the thermal agent. This seems to be in agreement with the results obtained by Mitchell et al. (2008) as they also found a decrease in RMS for the vastus lateralis muscle only during MVIC after the application of pulsed SWD with mean power of 40 W for 20 min. The authors also reported no changes in knee extension torque and the absence of changes in MF of that muscle at contractions ranging from 50% to 90% MVIC.

No changes were observed after the application of SWD for contractions performed at 25%, 50% and 75% of $MVIC_{bl}$. Although there is an apparently contradiction, since a significant reduction was observed for $MVIC_{free}$, it is important to notice that, among the various factors described next, this result may also be explained by the protocol used in our experiments. During submaximal contractions the volunteers were guided by visual feedback urging them to

Table 2
RMS (% of $MVIC_{bl}$) of the EMG signals collected from the brachial biceps muscle at different contraction levels for the control (CG), short-wave diathermy (SWG), and cryotherapy (CRG) groups ($n = 20$), before and after application of therapeutic agent (except for CG). Values expressed in terms of mean ± standard deviation.

	Contraction levels (% MVIC)				
		$25\%_MVIC_{lb}$	$50\%_MVIC_{lb}$	$75\%_MVIC_{lb}$	$MVIC_{free}$
CG	Before	17.2 ± 6.2	35.9 ± 11.5	56.5 ± 18.3	89.4 ± 30.5
	After	16.1 ± 5.7	39.0 ± 15	61.9 ± 22.7	85.6 ± 30.4
SWG	Before	24 ± 12.1	47.8 ± 27.2	71.3 ± 37.6	96.5 ± 45.9
	After	23.0 ± 9.6	46.2 ± 24.1	74.4 ± 35.9	89.1 ± 39.3*
CRG	Before	25.0 ± 10.2	51.1 ± 28.3	73.4 ± 38.8	103.4 ± 48.3
	After	34.1 ± 15.3*,◇	59.9 ± 26.8*,◇	97.9 ± 45.1*,◇,#	116.7 ± 59.2*,◇,#

* $p < 0.05$ Compared to "Before" – intra-group analysis.
◇ $p < 0.05$ Compared to the respective CG.
\# $p < 0.05$ Compared to the respective SWG – intergroup analysis.

Table 3
Medium frequency (Hz) of the EMG signals collected from the brachial biceps muscle at different contraction levels for the control (CG), short-wave diathermy (SWG), and cryotherapy (CRG) groups ($n = 20$), before and after application of therapeutic agent (except for CG). Values expressed in terms of mean ± standard deviation.

		Contraction levels (% MVIC)			
		25%_$MVIC_{lb}$	50%_$MVIC_{lb}$	75%_$MVIC_{lb}$	$MVIC_{free}$
CG	Before	50.2 ± 7.9	53.4 ± 6.2	53.2 ± 6.7	53.5 ± 6.6
	After	52.7 ± 8.9	56.4 ± 11.2	53.4 ± 8.2	56.2 ± 10.2
SWG	Before	53.9 ± 9.3	55.7 ± 8.2	56.6 ± 8.5	56.3 ± 8.6
	After	54.7 ± 10	55.6 ± 8.4	55.3 ± 8.8	54.8 ± 7.7
CRG	Before	49.7 ± 7.3	54.5 ± 9.5	52.9 ± 7.9	52.5 ± 5.6
	After	43.7 ± 9.7 [*,◇,#]	41.1 ± 12.9 [*,◇,#]	40.4 ± 9 [*,◇,#]	37.6 ± 9.1 [*,◇,#]

$MVIC_{bl}$ – MVIC collected at least two days before the actual experiments.
$MVIC_{free}$ – free MVIC collected before and after the application of thermal agents.
[*] $p < 0.05$ Compared to "Before" – intra-group analysis.
[◇] $p < 0.05$ Compared to the respective CG.
[#] $p < 0.05$ Compared to the respective SWG – intergroup analysis.

achieve a specific level (%) of force. Therefore, the visual feedback may have worked as an important stimulus helping them to compensate for the changes induced by hyperthermia. When the volunteers were left free to execute their MVIC that stimulus was not present and the forces generated were rather lower after the application of SWD.

The decrease in the RMS value of the $MVIC_{free}$ performed after SWD can support the suggestion of an increase in nervous conduction velocity and decrease in the action potential duration (Rutkove, 2001). Furthermore, as shown by Murakami et al. (2014), the muscle fiber conduction velocity increases with heating, which can be explained by the increase in the opening and closing speed of sodium ion channels. This, in turn, causes a reduction in the total envelop of each action potential leading to a lower RMS value of the EMG signal. Dewhurst et al. (2010) also ponder that the decrease in RMS can be attributed to a failure in synaptic transmission at the neuromuscular junction induced by temperature elevation.

It is noteworthy that the results of SWD depend on the modality of heating, dosage, application site, treatment time, and sample size. As the evaluation of SWD effectiveness and its neurophysiological correlates remain poorly researched, more studies with similar methodologies and healthy individuals are necessary to better understand the neuromuscular responses elicited by the application of SWD. In this sense, an important aspect to consider in this study was the transversal placement of the SWD electrodes, which did not prioritize the deep heat, but the fat tissue with greater resistance to the flow of electromagnetic fields (Van der Ésch and Hoogland, 1991). Also, the range of temperature increase achieved by SWD in our experiments was smaller than the range of temperature decrease obtained by CR, measured at the skin. This difference may be due to a number of factors, as cited above. On top of that, in temperature controlled lab environments the thermoregulatory mechanisms would act preferably in the direction of dissipating heat, literally meaning that it would be harder to warm up the skin (Hall, 2010) by means of SWD. Also, since this method acts from inside out and, in our case, it was target at fat tissue (temperature insulator), the internal heat would dissipate through neighbor tissue and take longer to reach the skin. Therefore, the temperature of the muscle could actually be higher than that measured at the skin. To confirm that, one would need to probe the muscle temperature directly. However, this is beyond the scope of this article, since we are looking to find out the effect of standard clinical protocols used by therapists. Nevertheless, it is possible that an increase in power and duration may lead to more significant changes in the EMG pattern after SWD. This will be investigated by the authors in future research.

With regard to cryotherapy, our results show significant changes in both RMS and MF of EMG signals collected from the brachial biceps at 25%, 50%, 75% of $MVIC_{bl}$ and also at $MVIC_{free}$.

Cryotherapy is known to decrease the amplitude of the nerve action potential and increase its latency, which can be partially explained by changes in the structure of the axon membrane and conductance of sodium and potassium channels under low temperature, leading to the reduction of the conduction velocity (Rutkove, 2001; Herrera et al., 2010). As a consequence, changes in the activation pattern of the motor units are also expect (Rubley et al., 2003; Gray et al., 2006), which, in turn, would be observed as changes in the features of the EMG signal.

Interestingly, sensory and motor neural conductances seem to be affected differently. Sensory neurons are influenced by small changes in temperature, possibly due to their superficial anatomic location. Thus, cooling may have an analgesic effect before motor neurons are significantly affected, allowing for mobility with minimal pain sensation. It is therefore important to consider the effects of reducing muscle temperature when interpreting performance outcomes or using cold between consecutive exercise bouts, as the muscle may still be at sub-physiological temperature (White and Wells, 2013).

It has been shown that after the application of ice packs over the muscle belly there is a reduction on the skin and muscle temperatures, which leads to changes in the physiological properties of the muscle (Castle et al., 2006; Petrofsky and Laymon, 2005; Rutkove, 2001). As described by Ricker et al. (1977), cooling is capable of affecting the contractile apparatus of skeletal muscles. This, in turn, may be responsible for changes in muscle resistance (Castle et al., 2006; Verducci, 2000) and force production (Oksa et al., 1997, 2002; Holewijn and Heus, 1992) observed after muscular cooling. Also, muscle cooling can reduce sarcolemma conduction, which can be observed by changes in the EMG signal (decrease of spectral parameters, as shown by Petrofsky and Laymon (2005) and Oksa et al. (2002)) and peripheral nerve conduction (Franssen and Wieneke, 1994; Halar et al., 1980), and can also compromise the neural input to central nervous system from muscle receptors (Pereira et al., 2010).

Pereira et al. (2010) studied the effect of the application of ice for 30 min over the tibialis anterior muscle on both the dorsiflexion force and EMG signal during MVIC. Force and EMG were measured at 5, 15, 30, 45 and 60 min after intervention. A reduction in the force and the amplitude of the EMG signal was found only after 30 min. Kimura et al. (2003) applied ice packs to the leg until the temperature of soleus and medial gastrocnemius muscles were below 15 °C. The authors found a decrease in peak force of the plantar flexion muscles and argue that hypothermia could actually

cause changes in the contractile mechanism of skeletal muscles. Cahill et al. (2011) exposed subjects to 60 min of immersion in water at 8 °C and also found a reduction in the maximum voluntary torque of the elbow flexors.

However, Oksa et al. (2002) reported an increase in the RMS of the wrist flexor and extensor muscles at two cold conditions (systemic and only the right forearm) at 5 °C for 2 h. Coulange et al. (2006) also found no change in the force of the leg extensor muscle at MVIC and observed a decrease in MF following total immersion of the body into cold water for 6 h at two different temperature (10 °C and 18 °C). Those findings, although based on different methodologies, seem to be in agreement with our results.

We evaluated the effect of CR therapy on different contraction levels performed during 6 s and found that, for all cases, there was an increase in the RMS values along with a decrease in the MF after the application of cooling. This suggests a readjustment of neuromuscular responses after the application of cryotherapy to maintain the same levels of force. According to Murakami et al. (2014), cooling is responsible for decreasing the muscle fiber conduction velocity. Also, according to Rutkove (2001), cooling affects the configuration of a motor unit action potential (MUAP) by slowing down the conduction velocity and lengthening the duration and increasing the amplitude of depolarizing muscle fibers. Our results corroborate those hypotheses: the increase in amplitude of the MUAPs is manifested here by the increase in the RMS values; the lengthening of the MUAP waveform results in the compression of signal energy towards lower frequencies, observed here as a decrease in the MF values. Our experiments also show that such behavior occurs at various levels of muscle contraction (maximal and submaximal).

Finally, we must exam the possibility that changes in the impedance of the skin, caused by changes in temperature, may be partially responsible for the effects observed in our experiments. In order to investigate this let us turn our attention to the skin-electrode interface.

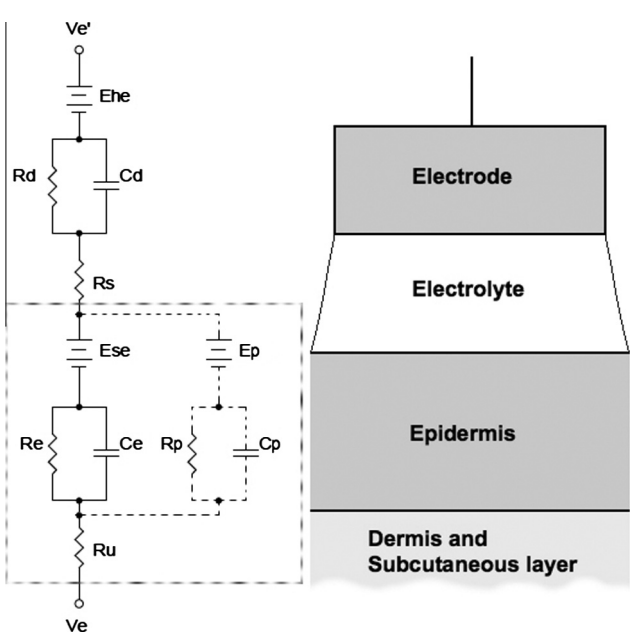

Fig. 1. Skin-electrode interface model. (A) E_{he}: half-cell potential at the electrode–electrolyte interface; R_dC_d: equivalent impedance of the electrode; R_s: resistance of the electrolyte; E_{se}: potential due to the difference in ionic concentration between the electrolyte and the skin; R_eC_e: equivalent impedance of the epidermis; E_p: potential due to the difference in ionic concentration between the electrolyte and the sweat secreted by the sweat glands; R_pC_p: equivalent impedance of the walls of the sweat glands and their ducts; R_u: resistive component associated to the subcutaneous layer – redrawn and adapted from Webster (2009).

Fig. 1 shows an electrical model accounting for the general components of the skin-electrode interface. E_{he}, E_{se} and E_p are the equivalent to dc voltages added to the signal due to electrode half-cell potential and differences in ionic concentration of the interface. Although the amplitude of those dc voltages depends on the temperature, the front-end differential amplifier and the high-pass filters embedded in the signal conditioning stage should virtually eliminate them. Therefore, we can exclude them from our analysis and focus on the resistive (R) and reactive (C) components of the skin-electrode impedance.

The equivalent impedance of the electrode (R_dC_d) depends on the type of material its made of. In our experiments the electrodes were made of silver, which has extremely low resistivity ($1.59 \times 10^{-8}\ \Omega\,\mathrm{m}$) and temperature coefficient ($0.0061\ ^\circ\mathrm{C}^{-1}$). This means that it is unlikely the changes in temperature of the skin promoted by our thermal treatments would reflect in any noticeable changes in the electrode impedance. Also the resistance (R_s) of the electrolyte (gel) can be disregarded since we used dry electrodes and any remnant electrolyte (for instance, sweat) would also have very small impedance.

The electrical equivalent of the skin can be represented by two RC paths (epidermis tissue: R_eC_e; sweat glands: R_pC_p) in series with R_u representing the resistance of the dermis and subcutaneous tissue. Since, the overall impedance of the stratum corneum heavily dominates the electrical impedance of the skin up to frequencies of hundreds of kHz, we can also infer that changes in R_u are also negligible in comparison with possible changes in R_eC_e and R_pC_p. As shown in Fig. 1, the impedance of the epidermis is the result of the parallel arrangement of those two parallel RC circuits, as show in Eq. (1):

$$Z_{ep}(w) = (R_e \| Z_{Ce}) \| (R_p \| Z_{Cp}) \tag{1}$$

where:

$$Z_{Ce} = 1/jwCe; \quad Z_{Cp} = 1/jwCp; \quad w = 2\pi f$$

$$R_e \| Z_{Ce} = \frac{R_e(1/jwC_e)}{R_e + (1/jwC_e)} = \frac{R_e}{1 + (jwC_eR_e)} \tag{2}$$

$$R_p \| Z_{Cp} = \frac{R_p}{1 + (jwC_pR_p)} \tag{3}$$

As expected, Eqs. (2) and (3) show that the impedance of both paths decreases as the frequency increases, facilitating the flow of higher frequencies. According to Rosell et al. (1988), for a 1 cm^2 area, dry skin impedance reduces from 200 kΩ at 1 Hz to 200 Ω at 1 MHz at temperatures around 25 °C. This is mostly due to chances in the reactive impedance ($1/(jwc)$). However, heat and cold also have a significant effect on the both components (R/C) of the skin impedance. Gudivaka et al. (1985) studied the effects of changes in skin temperature on multifrequency bioimpedance analysis and found that the impedance of the skin varied inversely with changes in skin temperature across a wide range of high frequencies (5–500 kHz). Later, Smith (1992) showed that both the resistive and reactive components of the skin-electrode impedance have an inverse linear relationship to temperature between 26 °C and 36 °C, at frequencies ranging from 100 Hz to 1 kHz. Although, measuring the exact amount of change is not a trivial task, knowledge of this inverse relationship help us to ponder on possible implications of changes in skin impedance due to the temperature.

The application of SWD raised the temperature of the skin while promoting a decrease in RMS levels at $\mathrm{MVIC_{free}}$. Knowing that higher temperatures would reduce the impedance of the skin, one would expect an increase in the RMS values after the application of SWD when comparing to the same situation at lower tem-

peratures (before the application of SWD). Our results show the opposite – meaning that, although the increase in temperature would be responsible for increasing the RMS values, such changes were considerably smaller than those in the opposite direction occurring at neuromuscular levels.

CR therapy was effective in lowering the skin temperature with significant changes in both RMS (increase) and MF (decrease) of EMG signals collected from the brachial biceps at 25%, 50%, 75% of $MVIC_{bl}$ and also at $MVIC_{free}$. Using similar reasoning, we can conclude that the increase in the RMS values could not be caused by the reduction of the temperature. On the other hand, lower temperatures could have had an impact on the MF values if the changes in the skin impedances were more pronounce at higher frequencies. Nevertheless, when we analyze the results for SWD, no significant changes were observed in the median frequency with changes in the temperature. Hence, although we cannot completely rule out possible interferences of skin temperature on the MF values obtained after CR, the authors argue that such changes, if any, would be considerably smaller than those generated at neuromotor levels induced by cooling.

It is important to highlight that, after an in-depth literature review and to the best of our knowledge, this is the first study dealing with the effects of heat and cold on electromyographic responses of upper limbs at maximal and submaximal contraction levels.

5. Conclusion

The results of the present study demonstrate that the application of short-wave diathermy was not enough to promote significant electromyographic changes. On the other hand, cryotherapy promoted significant alterations in the neuromuscular system at different levels of contraction. Therapists should be aware of that when prescribing cryotherapy associated with maximal or submaximal exercises, since it can have an important impact on the ability of the neuromuscular system to yield protective responses to potential damages.

Acknowledgements

We would like to thank National Council for Scientific and Technological Development (CNPq), grant #475520/2008-4; São Paulo Research Foundation (FAPESP) grant #10/09341-7 and PIBIC-CNPq/USP for the financial support and Rehabilitation Center of the Clinics Hospital of the Ribeirão Preto Medical School, University of São Paulo.

References

Algafly AA, George KP. The effect of cryotherapy on nerve conduction velocity, pain threshold and pain tolerance. Br J Sports Med 2007;41:365–9.
Cahill F, Kalmar JM, Pretorius T, Gardiner PF, Giesbrecht GG. Whole-body hypothermia has central and peripheral influences on elbow flexor performance. Exp Physiol 2011;96:528–38.
Castle PC, Macdonald AL, Philp A, Webborn A, Watt PW, Maxwell NS. Precooling leg muscle improves intermittent sprint exercise performance in hot, humid conditions. J Appl Physiol 2006;100:1377–84.
Charkoudian N, Stephens DP, Pirkle KC, Kosiba WA, Johnson JM. Influence of female reproductive hormones on local thermal control of skin blood flow. J Appl Physiol 1999;87:1719–23.
Clarys JP. Electromyography in sports and occupational settings: an update of its limits and possibilities. Ergonomics 2000;43:1750–62.
Coulange M, Hug F, Kipson N, Robinet C, Desruelle AV, Melin B, et al. Consequences of prolonged total body immersion in cold water on muscle performance and EMG activity. Eur J Appl Physiol 2006;452:91–101.
Dewhurst S, Riches PE, Nimmo MA, De Vito G. Temperature dependence of soleus H-reflex and M wave in Young and older women. Eur J Appl Physiol 2005;94:491–9.
Dewhurst S, Macaluso A, Gizzi L, Felici F, Farina D, De Vito G. Effects of altered muscle temperature on neuromuscular properties in young and older women. Eur J Appl Physiol 2010;108:451–8.
Franssen H, Wieneke GH. Nerve conduction and temperature: necessary warming time. Muscle Nerve 1994;17:336–44.
Garret CL, Draper DO, Knight KL. Heat distribution in the lower leg from pulsed short wave diathermy and ultrasound treatments. J Athlet Train 2000;35(1):50–5.
Gray SR, De Vito G, Nimmo MA, Farina D, Ferguson RA. Skeletal muscle ATP turnover and muscle fiber conduction velocity are elevated at higher muscle temperatures during maximal power output development in humans. Am J Physiol-Regul, Integr Comp Physiol 2006;290:376–82.
Gudivaka R, Schoeller D, Kushner RF. Effect of skin temperature on multifrequency bioelectrical impedance analysis. J Appl Physiol 1985;81(2):838–45.
Guirro RRJ, Forti F, Bigaton DR. Proposal for electrical insulation of the electromyographic signal acquisition module. Electromyogr Clin Neurophysiol 2006;46(6):355–63.
Halar EM, Delisa JA, Brozovich FV. Nerve conduction velocity: relationship of skin subcutaneous and intramuscular temperatures. Arch Phys Med Rehabil 1980;61:199–203.
Hall JE. Guyton and Hall Textbook of Medical Physiology. 12th ed. Philadelphia: Elsevier Health Sciences; 2010.
Hermens HJ, Freriks B, Disselhorst-Klug C, Rau G. Development of recommendations for SEMG sensors and sensor placement procedures. J Electromyogr Kinesiol 2000;10(5):361–74.
Herrera E, Sandoval M, Camargo DM, Salvini TF. Motor and sensory nerve conduction are affected differently by ice pack, ice massage, and cold water immersion. Phys Ther 2010;90(4):581–91.
Holewijn M, Heus R. Effects of temperature on electromyogram and muscle function. Eur J Appl Physiol Occup Physiol 1992;65:541–5.
Hopper D, Whittington DJ, Davies J, Chartier JD. Does immersion influence ankle joint position? Physiother Res Int 1997;2(4):223–36.
Khanmohammadi R, Someh M, Ghafarinejad F. The effect of cryotherapy on the normal ankle joint position sense. Asian J Sports Med 2011;2(2):91–8.
Kimura T, Hamada T, Ueno LM, Morintani T. Changes in contractile properties and neuromuscular propagation evaluated by simultaneous mechanomyogram and electromyogram during experimentally induced hypothermia. J Electromyogr Kinesiol 2003;13:433–40.
Madigan ML, Pidcoe PE. A muscle temperature compensation technique for EMG fatigue measures. Med Sci Sports Exerc 2002;34:780–4.
Meigal AY, Oksa J, Hohtola E, Lupandin YV, Rintamaki H. Influence of cold shivering on fine motor control in the upper limb. Acta Physiol Scand 1998;163(1):41–7.
Merrick MA, Jutte LS, Smith ME. Cold modalities with different thermodynamic properties produce different surface and intramuscular temperatures. J Athlet Train 2003;38(1):28–33.
Mitchell SM, Trowbridge CA, Fincher AL, Cramer JT. Effect of diathermy on muscle temperature, electromyography, and mechanomyography. Muscle Nerve 2008;38:992–1004.
Murakami K, Fujisawa H, Onobe J, Sato Y. Relationship between muscle fiber conduction velocity and the force–time curve during muscle twitches. J Phys Ther Sci 2014;26(4):621–4.
Oksa J, Rintamaki H, Rissanen S. Muscle performance and electromyogram activity of the lower leg muscles with different levels of cold exposure. Eur J Appl Physiol Occup Physiol 1997;75:484–90.
Oksa J, Ducharme MB, Rintamäki H. Combined effect of repetitive work and cold on muscle function and fatigue. J Appl Physiol 2002;92(1):354–61.
Pereira LG, Pereira R, Pinto Neto O, Magini M. The short and long term effects of tibialis anterior local cooling on dorsiflexion force. J Hum Kinet 2010;26:65–71.
Pereira WM, Ferreira LAB, Rossi LP, Kerpers II, Grecco LAC, Junior ARP, et al. Influence of heat on fatigue and electromyographic activity of the biceps brachii muscle. J Bodywork Movement Ther 2011;15:478–84.
Petrofsky J, Laymon M. The relationship between muscle temperature, MUAP conduction velocity and the amplitude and frequency components of the surface EMG during isometric contractions. Basic Appl Myol 2005;15:61–74.
Racinais S, Gaoua N, Grantham J. Hyperthermia impairs short-term memory and peripheral motor drive transmission. J Physiol 2008;19:4751–62.
Ricker K, Hertel G, Stodieck G. Increased voltage of the muscle action potential of normal subjects after local cooling. J Neurol 1977;216:33–8.
Rosell J, Colominas J, Riu P, Pallas-Areny R, Webster JG. Skin impedance from 1 Hz to 1 MHz. IEEE Trans Biomed Eng 1988;35(8):649–51.
Rubley MD, Denegar CR, Buckley WE, Newell KM. Cryotherapy, sensation, and isometric-force variability. J Athlet Train 2003;38(2):113–9.
Ruiz DH, Myrer JW, Durrant E, Fellingham GW. Cryotherapy and sequential exercise bouts following cryotherapy on concentric and eccentric strength in the quadriceps. J Athlet Train 1993;28(4):320–3.
Rupp KA, Herman DC, Hertel J, Saliba SA. Intramuscular temperature changes during and after 2 different cryotherapy interventions in healthy individuals. J Orthop Sports Phys Ther 2012;42(8):731–7.
Rutkove SB. Effects of temperature on neuromuscular electrophysiology. Muscle Nerve 2001;24(7):867–82.
Schall R. Estimation in generalized linear models with random effects. Biometrika 1991;78(4):719–27.
Smith DC. Effects of skin blood flow and temperature on skin–electrode impedance and offset potential: measurements at low alternating current density. J Med Eng Technol 1992;16(3):112–6.
Stewart D, Macaluso A, De Vito G. The effect of an active warm-up on surface EMG and muscle performance in healthy humans. Eur J Appl Physiol 2003;89:509–13.

Uchio Y, Ochi M, Fujihara A, Adachi N, Iwasa J, Sakai Y. Cryotherapy influences joint laxity and position sense of the healthy knee joint. Arch Phys Med Rehabil 2003;84:131–5.
Van der Ésch M, Hoogland R. Pulsed Shortwave Diathermy with the Curapulse. Delft: Delft Instruments Physical Medicine BV; 1991. p. 419.
Verducci FM. Interval cryotherapy decreases fatigue during repeated weight lifting. J Athlet Train 2000;35:422–6.
Webster JW. Medical Instrumentation: Application and Design. fourth ed. New York: J. Wiley; 2009.
White GE, Wells GD. Cold-water immersion and other forms of cryotherapy: physiological changes potentially affecting recovery from high-intensity exercise. Extreme Physiol Med 2013;2(26):1–11.

Larissa Martins Garcia graduated in Physiotherapy at the Federal University of São Carlos (Brazil) in 2008, Enhancing Professional Physiotherapy in Orthopaedics and Traumatology in the General Hospital of the Ribeirão Preto Medical School, University of São Paulo (2009), and Masters in Science in Applied Health in Locomotor at the Ribeirão Preto Medical School, University of São Paulo (2012). Is currently physiotherapist in Orthopaedics and Traumatology of Rehabilitation Center of the General Hospital of the Ribeirão Preto Medical School, University of São Paulo.

Dr. Alcimar B. Soares graduated in Electrical Engineering at the Federal University of Uberlândia (Brazil) in 1987, where he also received his M.Sc in the area of Artificial Intelligence in 1990. He received his Ph.D. in Biomedical Engineering from the University of Edinburgh (UK) in 1997. He is a Professor at the Faculty of Electrical Engineering of the Federal University of Uberlândia in Brazil, Editor-in-Chief of the Brazilian Journal of Biomedical Engineering, Associate-Editor of the Medical & Biological Engineering & Computing Journal, reviewer of many scientific journals worldwide and ad-hoc consultant to various Brazilian government agencies. He is also member of various scientific societies, such as the IEEE Engineering in Medicine and Biology Society, the Brazilian Society of Biomedical Engineering, the International Society of Electromyography and Kinesiology. Dr. Soares has more than twenty years of experience in biomedical engineering, including neuroengineering, prostheses, electromyography, medical instrumentation, biofeedback, rehabilitation and assistive technologies and has authored and co-authored books, book chapters and more than 150 publications in the area.

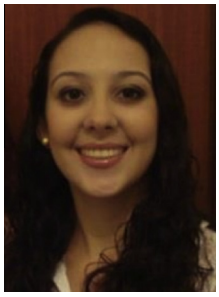

Camila Simieli graduated in Physiotherapy at the Ribeirão Preto Medical School, University of São Paulo (Brazil) in 2012.

Alessandra Vairo Peres Boratino graduated student in Physiotherapy at the Ribeirão Preto Medical School, University of São Paulo (Brazil).

Dr. Rinaldo R.J. Guirro graduated in Physiotherapy, Masters in Bioengineering and Ph.D. in Pathology Oral-Dental Biology. He is currently Deputy Coordinator of Professional Master of Area 21 – CAPES, professor of Undergraduate Physiotherapy and Coordinator of the Postgraduate Program in Rehabilitation and Functional Performance of the Ribeirão Preto Medical School/USP and is Co-Editor-Chief of the Physiotherapy & Research Journal and Associate-Editor of Brazilian Journal of Physical Therapy. He was president of Brazilian Association of Physiotherapy Research and Postgraduate in Physiotherapy. Dr. Guirro has experience in the field of physical therapy, with emphasis in musculoskeletal physiotherapy and photo-electro-thermal resources. Conducts research in the area of Instrumentation and physical therapy Intervention and has authored and co-authored book chapters besides to publications in the area.