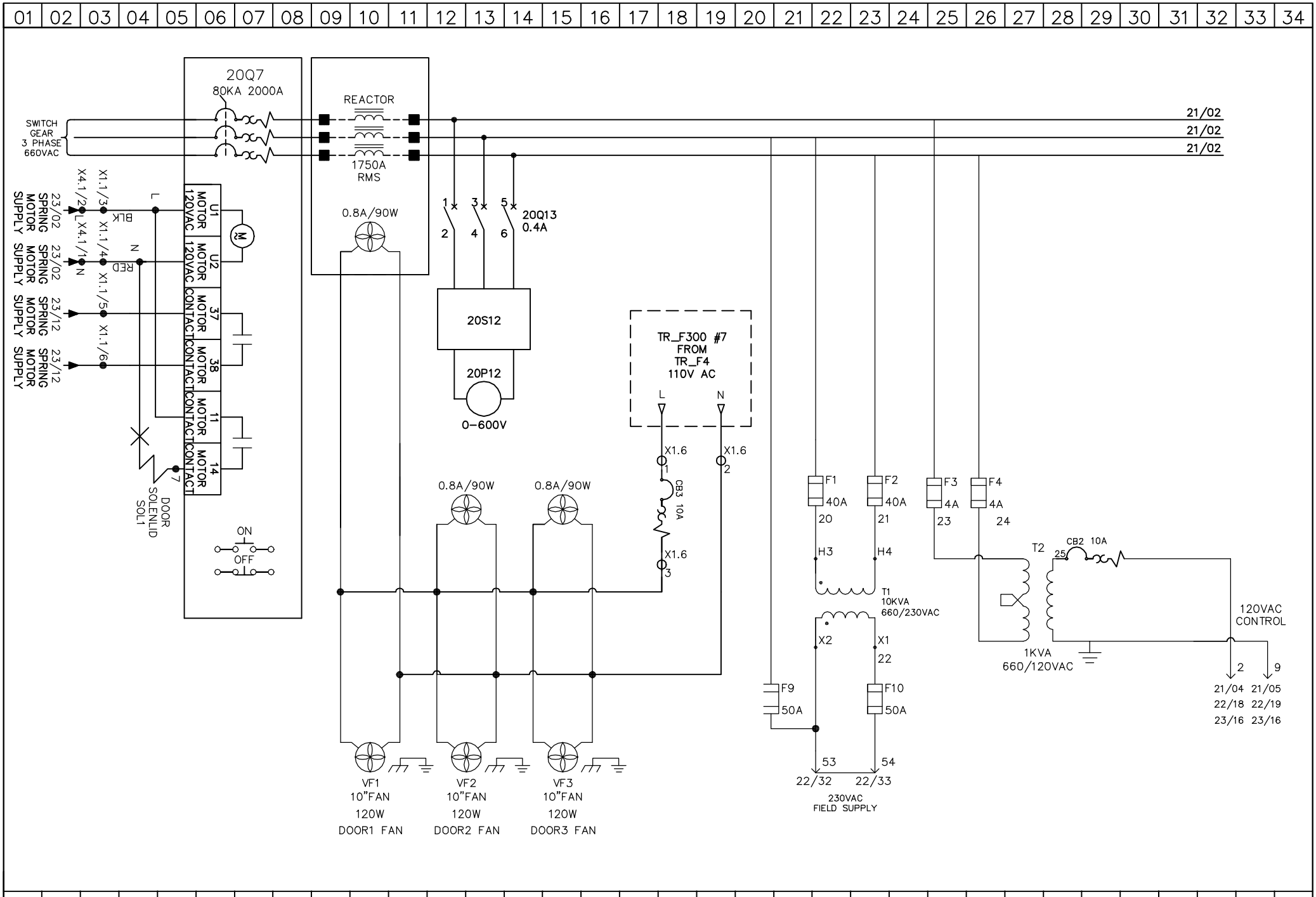

INTEPLAST GROUP, Ltd. AMTOPP DIVI. M/E DEPT.	EXTRUDER 1 SUPPLY Line2 and Line4	DRAWING DESCRIPTION	KF F16	Page #	20
DRAWN BY: VICTOR WEI		DRAWING NO.		Total	
CHECKED BY: VINCENT HUANG		DRAWN DATE: 11/14/2013		MATERIAL	
				SCALE: NONE	UNIT: MM

REV. NO	REV. DESCRIPTION	REV. BY:	REV. DATE

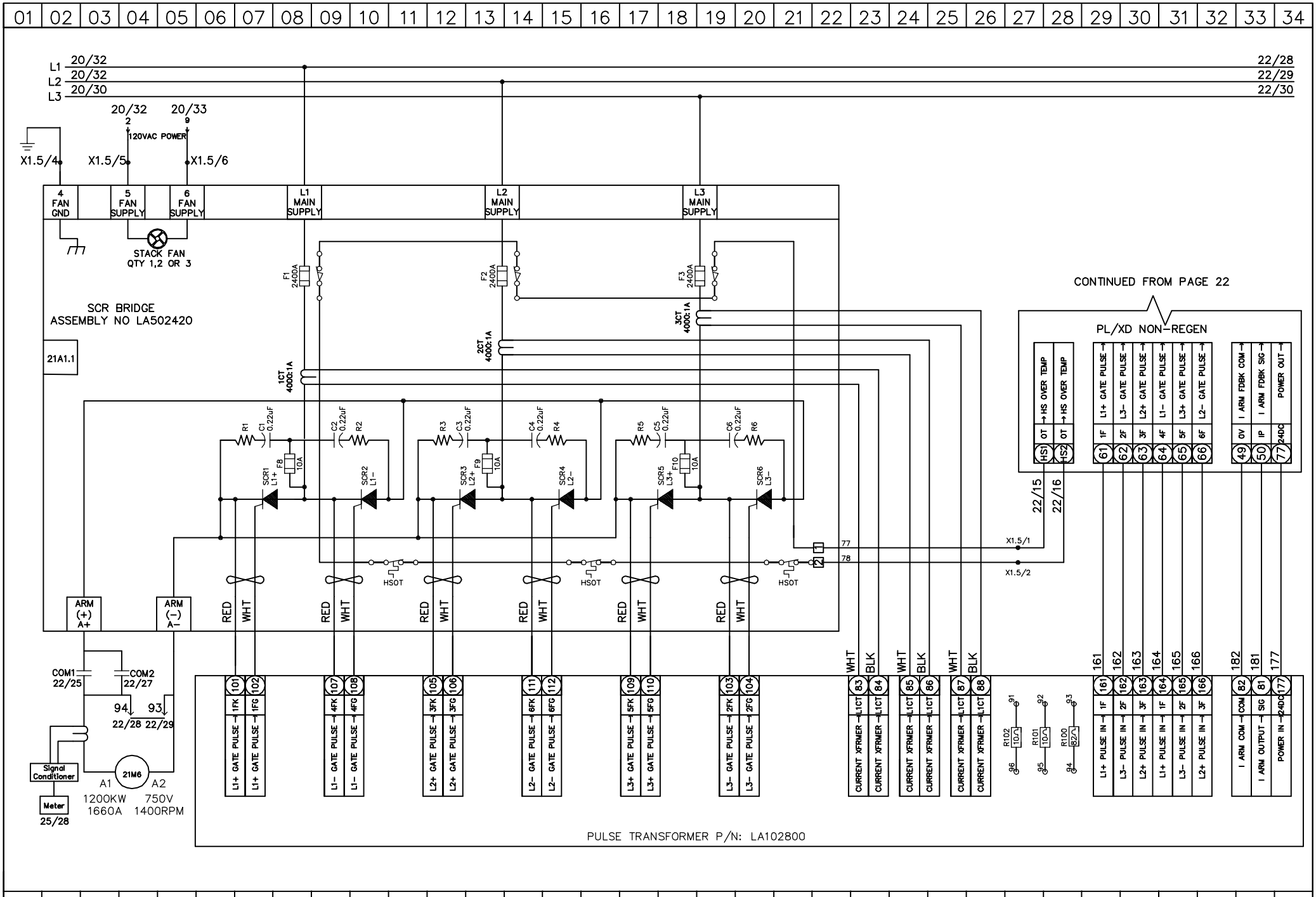

01	02	03	04	05	06	07	08	09	10	11	12	13	14	15	16	17	18	19	20	21	22	23	24	25	26	27	28	29	30	31	32	33	34

INTEPLAST GROUP, Ltd. AMTOPP DIVI. M/E DEPT.	EXTRUDER 1 MOTOR POWER FOR BARDAC DRIVE					DRAWING DESCRIPTION	KF F16	Page #	21		
								Total			
DRAWN BY	VICTOR WEI					DRAWING NO.		MATERIAL			
CHECKED BY	VINCENT HUANG	REV. NO	REV. DESCRIPTION	REV. BY:	REV. DATE	DRAWN DATE:	11/14/2013	SCALE	NONE	UNIT	MM

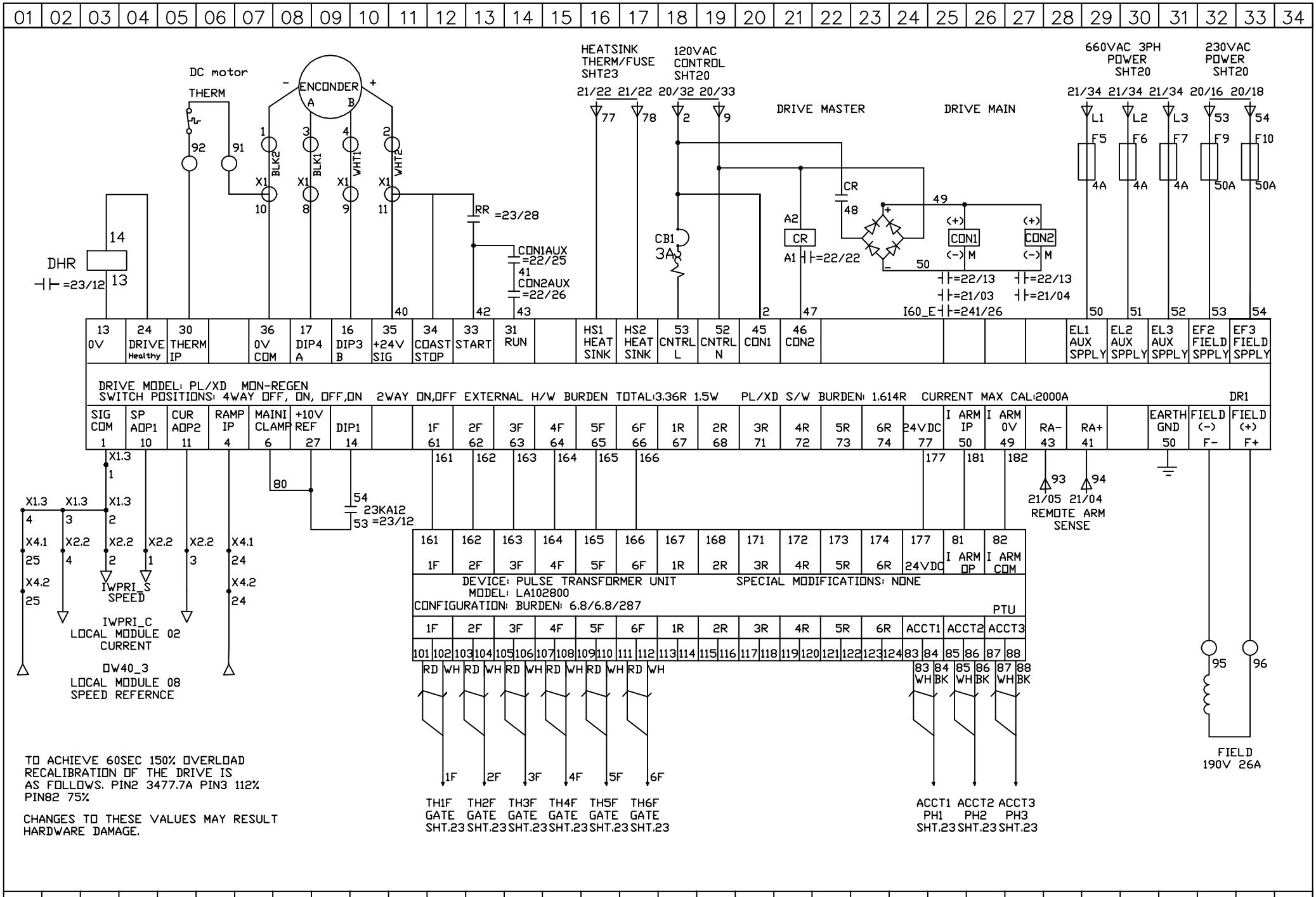

TO ACHIEVE 60SEC 150% OVERLOAD RECALIBRATION OF THE DRIVE IS AS FOLLOWS. PIN2 3477.7A PIN3 112% PIN82 75%

CHANGES TO THESE VALUES MAY RESULT HARDWARE DAMAGE.

INTEPLAST GROUP, Ltd. AMTOPP DIVI. M/E DEPT.	PRI- EXT MOTOR POWER BARDAC DRIVE	DRAWING DESCRIPTION	BARDAC DRIVE F16
DRAWN BY VINCENT HUANG		DRAWING NO.	195867S
CHECKED BY		DRAWN DATE:	03-20-2013

REV. NO	REV. DESCRIPTION	REV. BY:	REV. DATE

Page #	22		
Total			
MATERIAL			
SCALE	NONE	UNIT	MM

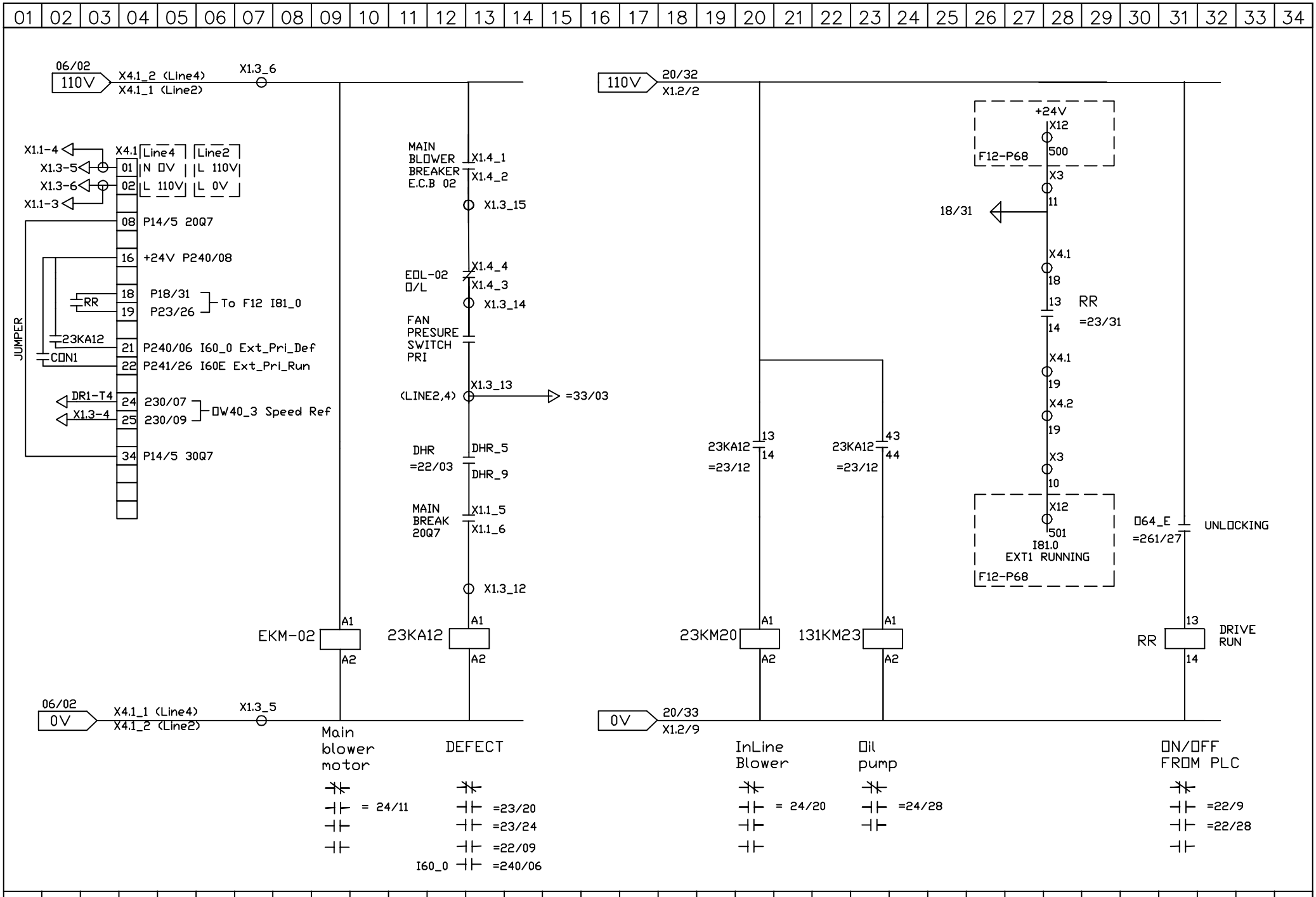

INTEPLAST GROUP, Ltd. AMTOPP DIVI. M/E DEPT.	EXTRUDER 1 MOTOR CONTROL CIRCUIT (LINE2,4) FOR BARDAC	DRAWING DESCRIPTION	Control circuit F16
DRAWN BY VINCENT HUANG		DRAWING NO.	
CHECKED BY		DRAWN DATE: 03-19-2013	

REV. NO	REV. DESCRIPTION	REV. BY:	REV. DATE

Page #	23
Total	
MATERIAL	
SCALE	NONE
UNIT	MM

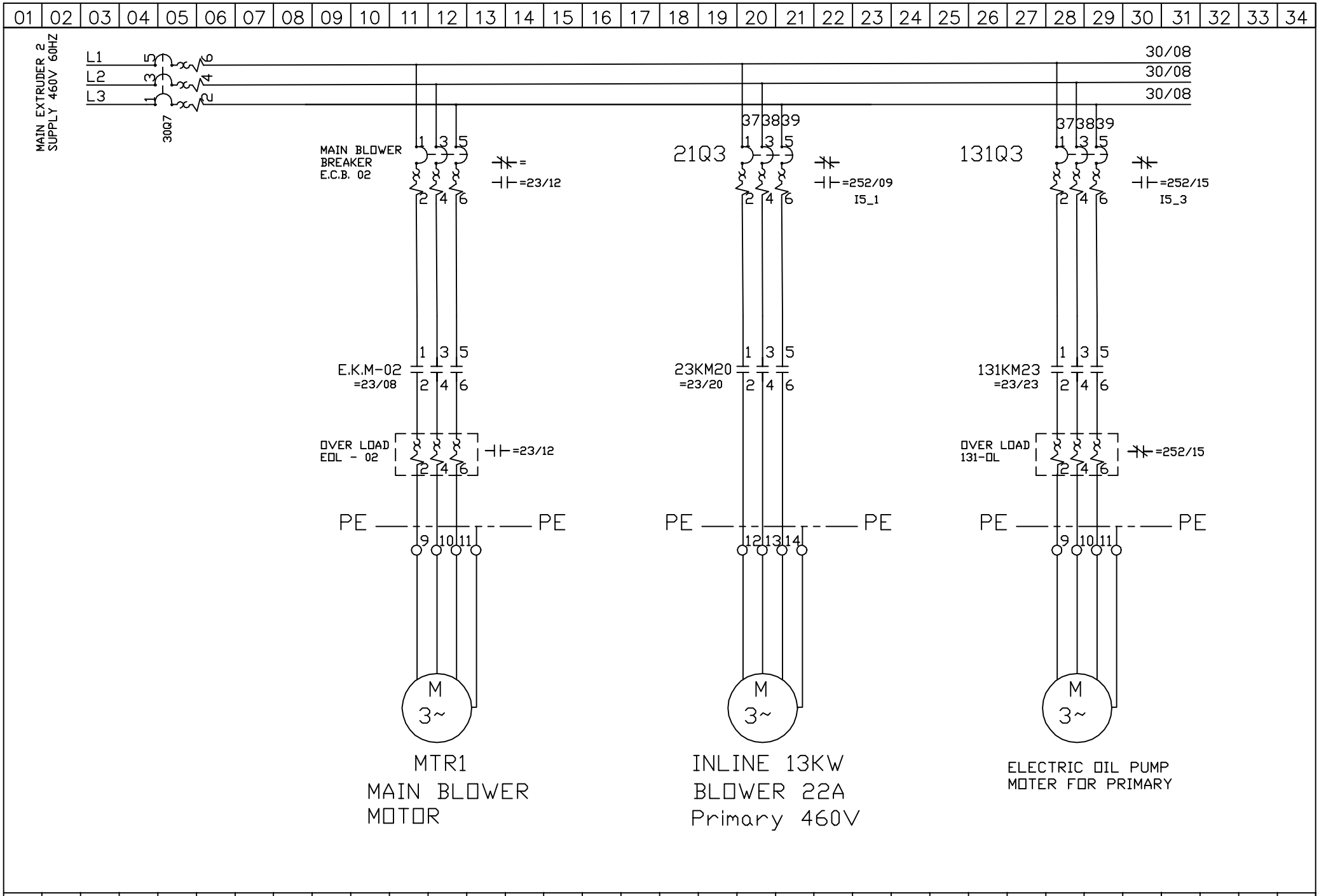

INTEPLAST GROUP, Ltd. AMTOPP DIVI. M/E DEPT.	MAIN BLOWER, Inline Blower and Oil pump Motor for Bardac			DRAWING DESCRIPTION	F16	Page #	24
DRAWN BY VINCENT HUANG				DRAWING NO.	195867S	Total	
CHECKED BY		REV. NO	REV. DESCRIPTION	REV. BY:	REV. DATE	DRAWN DATE: 03-19-2013	MATERIAL / SCALE / NONE / UNIT / MM

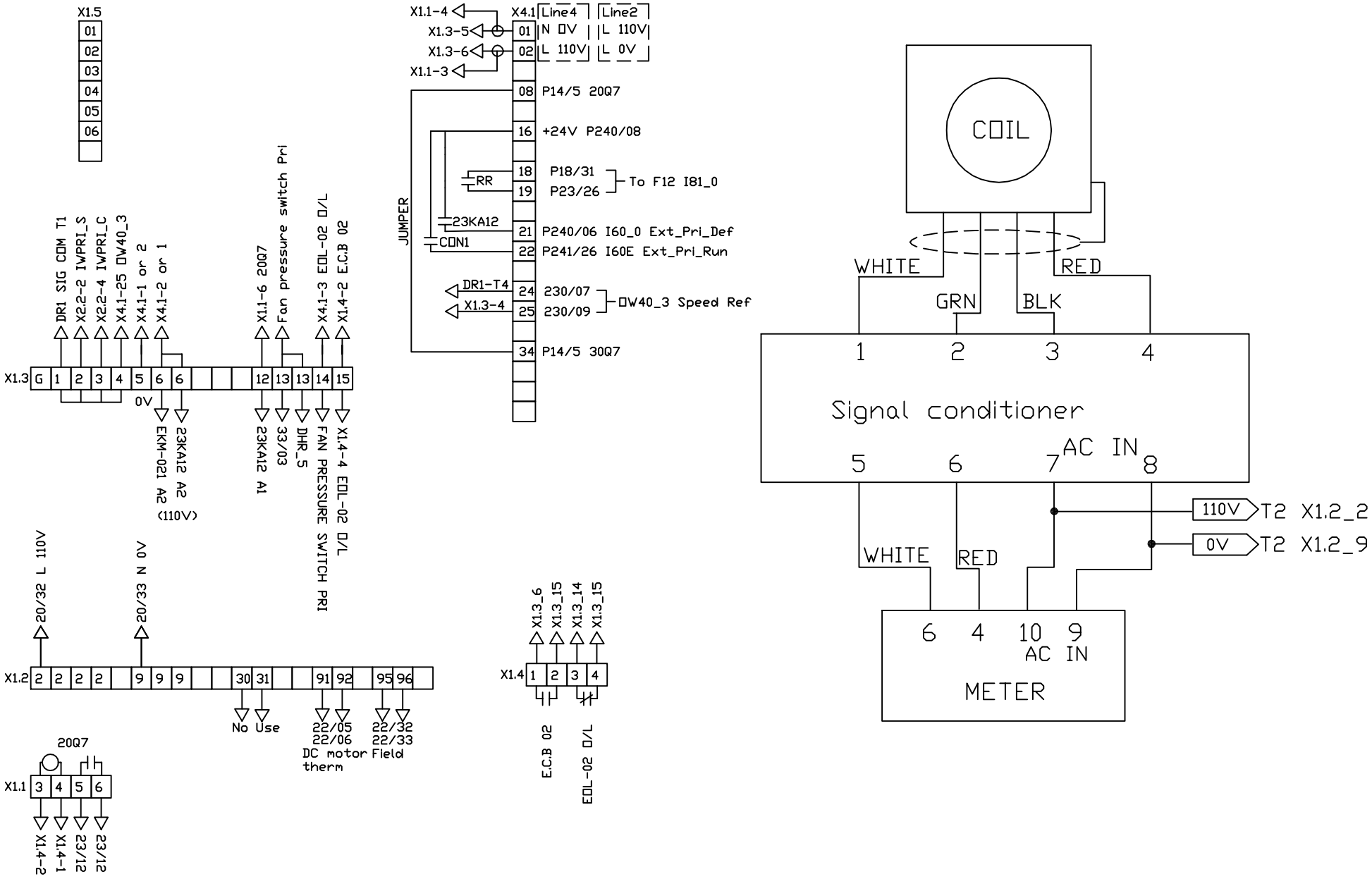

INTEPLAST GROUP, Ltd. AMTOPP DIVI. M/E DEPT.	PRIMARY EXT CT for BARDAC			DRAWING DESCRIPTION	F16	Page #	25
DRAWN BY VINCENT HUANG				DRAWING NO.	195867S	Total	
CHECKED BY		REV. NO	REV. DESCRIPTION	REV. BY	REV. DATE	DRAWN DATE: 03-18-2013	MATERIAL
						SCALE NONE	UNIT MM

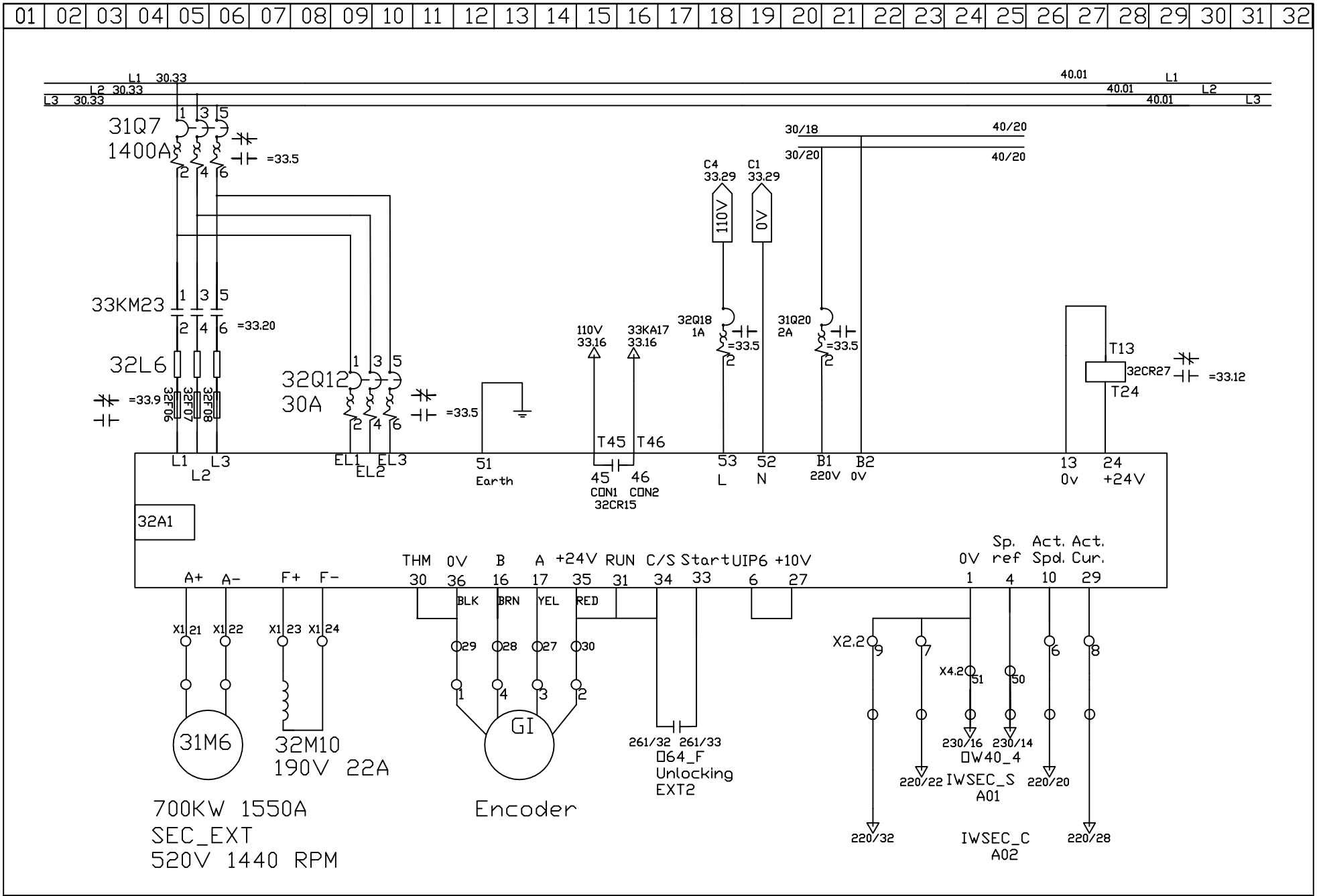

INTEPLAST GROUP, Ltd. AMTOPP DIVI. M/E DEPT.	SEC_EXT MOTOR POWER BARDAC DRIVE			DRAWING DESCRIPTION	BARDAC DRIVE	Page #	32
DRAWN BY VINCENT HUANG				DRAWING NO.	195867S	Total / MATERIAL	
CHECKED BY	REV. NO	REV. DESCRIPTION	REV. BY:	REV. DATE	DRAWN DATE: 01-18-2011	SCALE NONE	UNIT MM

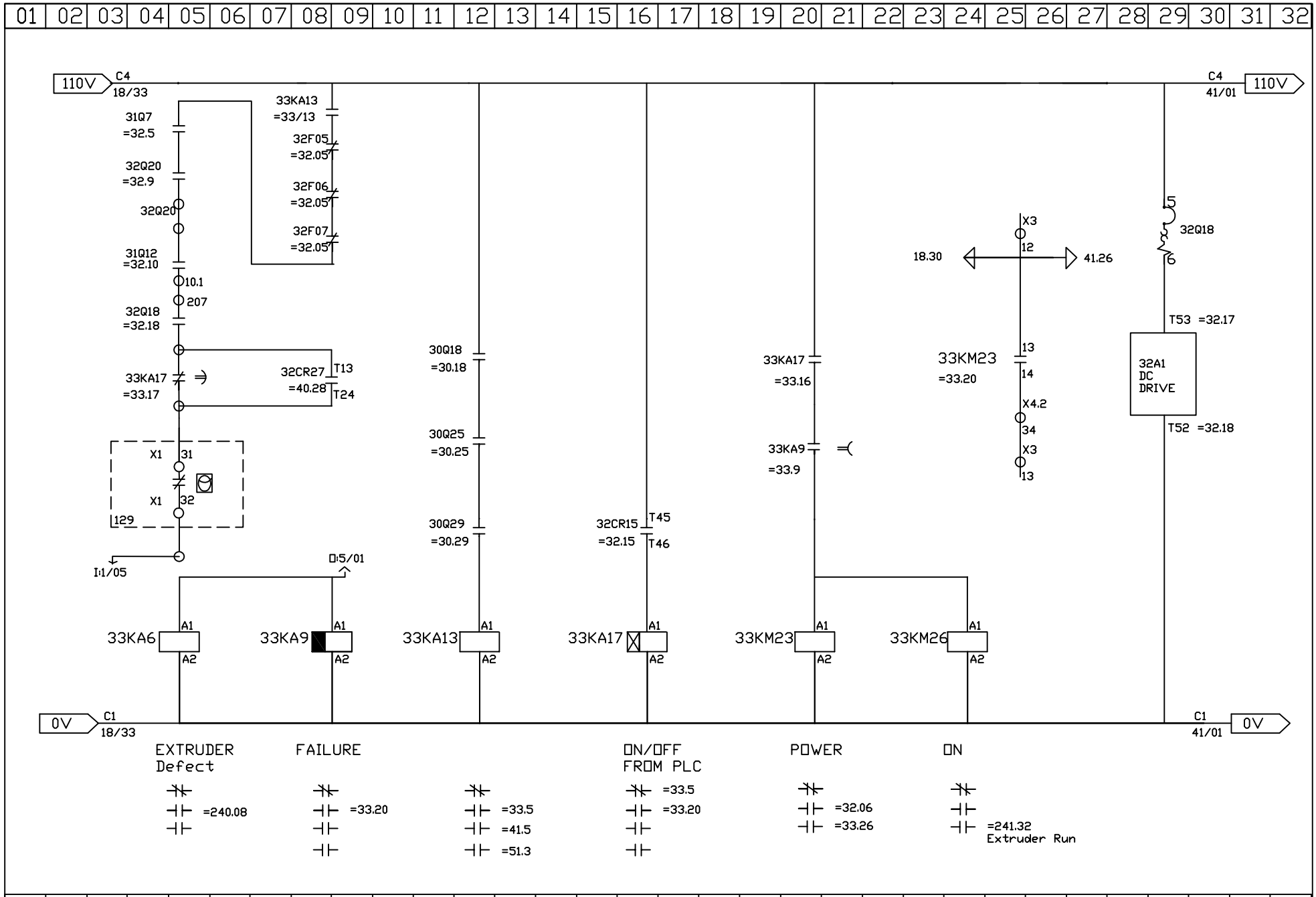

INTEPLAST GROUP, Ltd. AMTOPP DIVI. M/E DEPT.	SEC_EXT MOTOR POWER BARDAC DRIVE			DRAWING DESCRIPTION	BARDAC DRIVE	Page #	33
DRAWN BY VINCENT HUANG				DRAWING NO.	195867S	Total / MATERIAL	
CHECKED BY		REV. NO	REV. DESCRIPTION / REV. BY: / REV. DATE	DRAWN DATE:	01-12-2011	SCALE / NONE / UNIT	MM

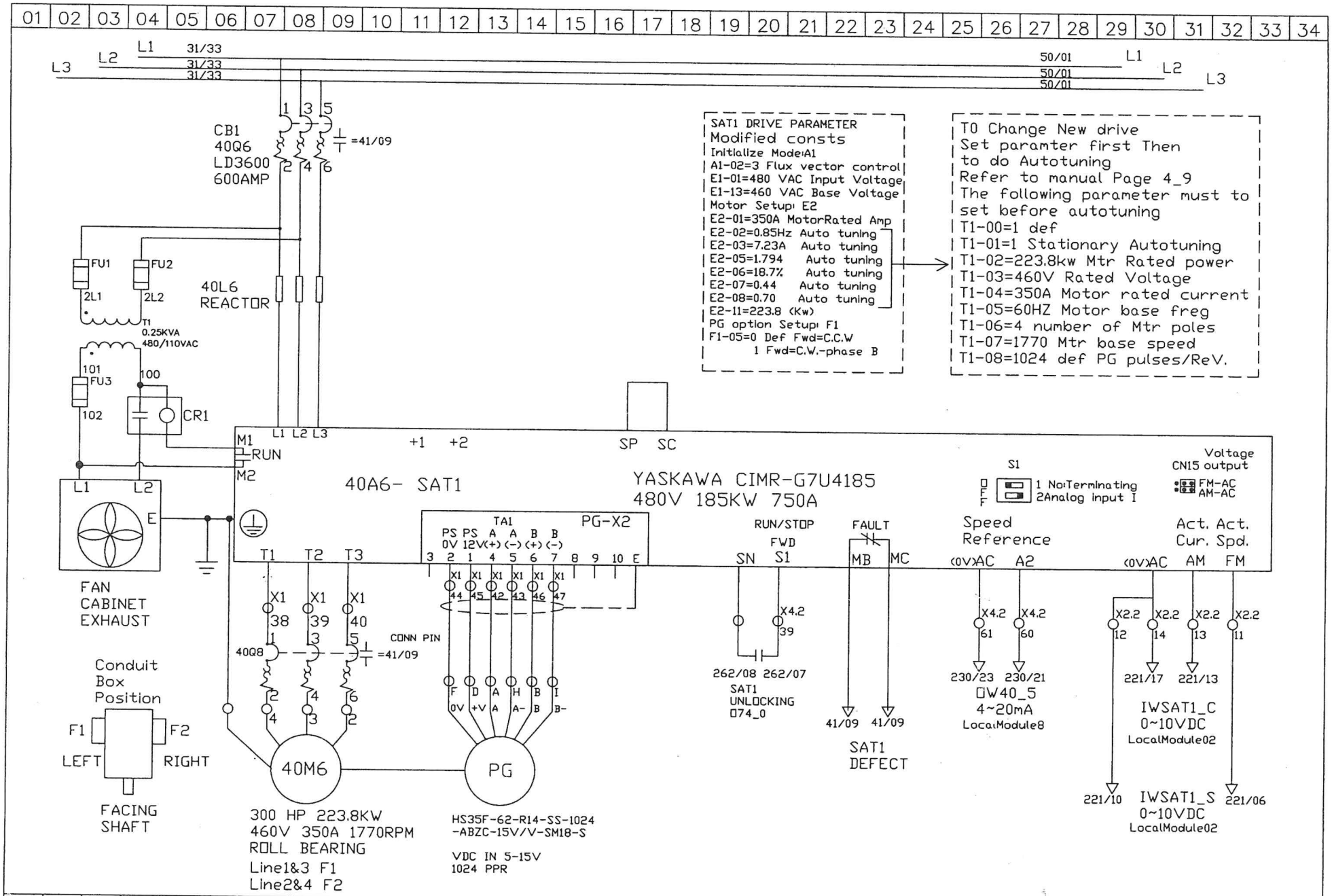

SAT1 DRIVE PARAMETER
Modified consts
Initialize Mode: A1
A1-02=3 Flux vector control
E1-01=480 VAC Input Voltage
E1-13=460 VAC Base Voltage
Motor Setup: E2
E2-01=350A MotorRated Amp
E2-02=0.85Hz Auto tuning
E2-03=7.23A Auto tuning
E2-05=1.794 Auto tuning
E2-06=18.7% Auto tuning
E2-07=0.44 Auto tuning
E2-08=0.70 Auto tuning
E2-11=223.8 (Kw)
PG option Setup: F1
F1-05=0 Def Fwd=C.C.W
1 Fwd=C.W.-phase B

TO Change New drive
Set paramter first Then
to do Autotuning
Refer to manual Page 4_9
The following parameter must to
set before autotuning
T1-00=1 def
T1-01=1 Stationary Autotuning
T1-02=223.8kw Mtr Rated power
T1-03=460V Rated Voltage
T1-04=350A Motor rated current
T1-05=60HZ Motor base freg
T1-06=4 number of Mtr poles
T1-07=1770 Mtr base speed
T1-08=1024 def PG pulses/ReV.

| | | |

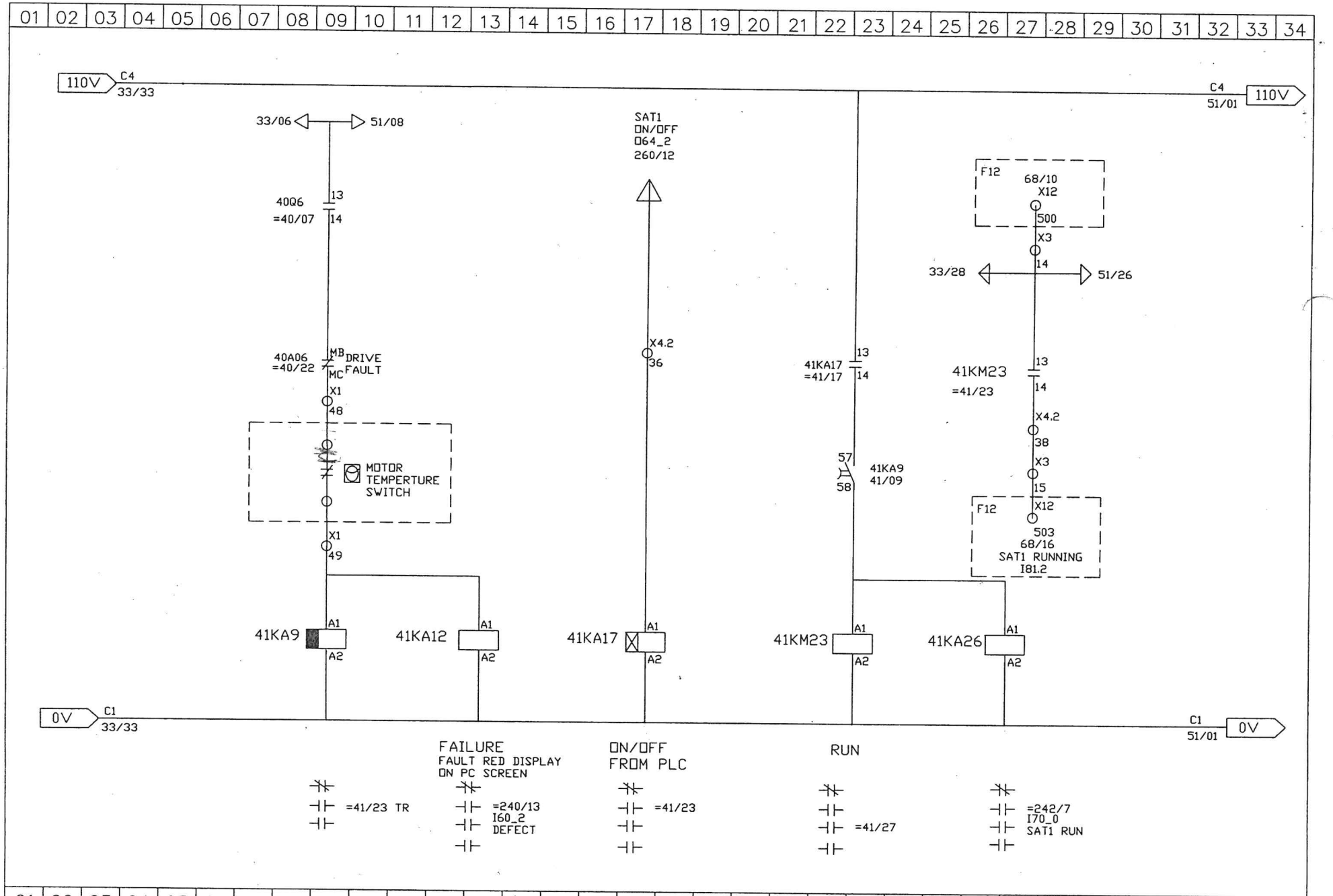

INTEPLAST GROUP, Ltd.
AMTOPP DIVI. M/E DEPT.

DRAWN BY VINCENT HUANG

CHECKED BY

AUXILIARY EXTRUDER SAT1 MOTOR CONTROL CIRCUIT G7 DRIVE

REV. NO	REV. DESCRIPTION	REV. BY:	REV. DATE

DRAWING DESCRIPTION	F16	Page #	41
		Total	
DRAWING NO.		MATERIAL	
DRAWN DATE: 01-26-2016		SCALE NONE	UNIT MM

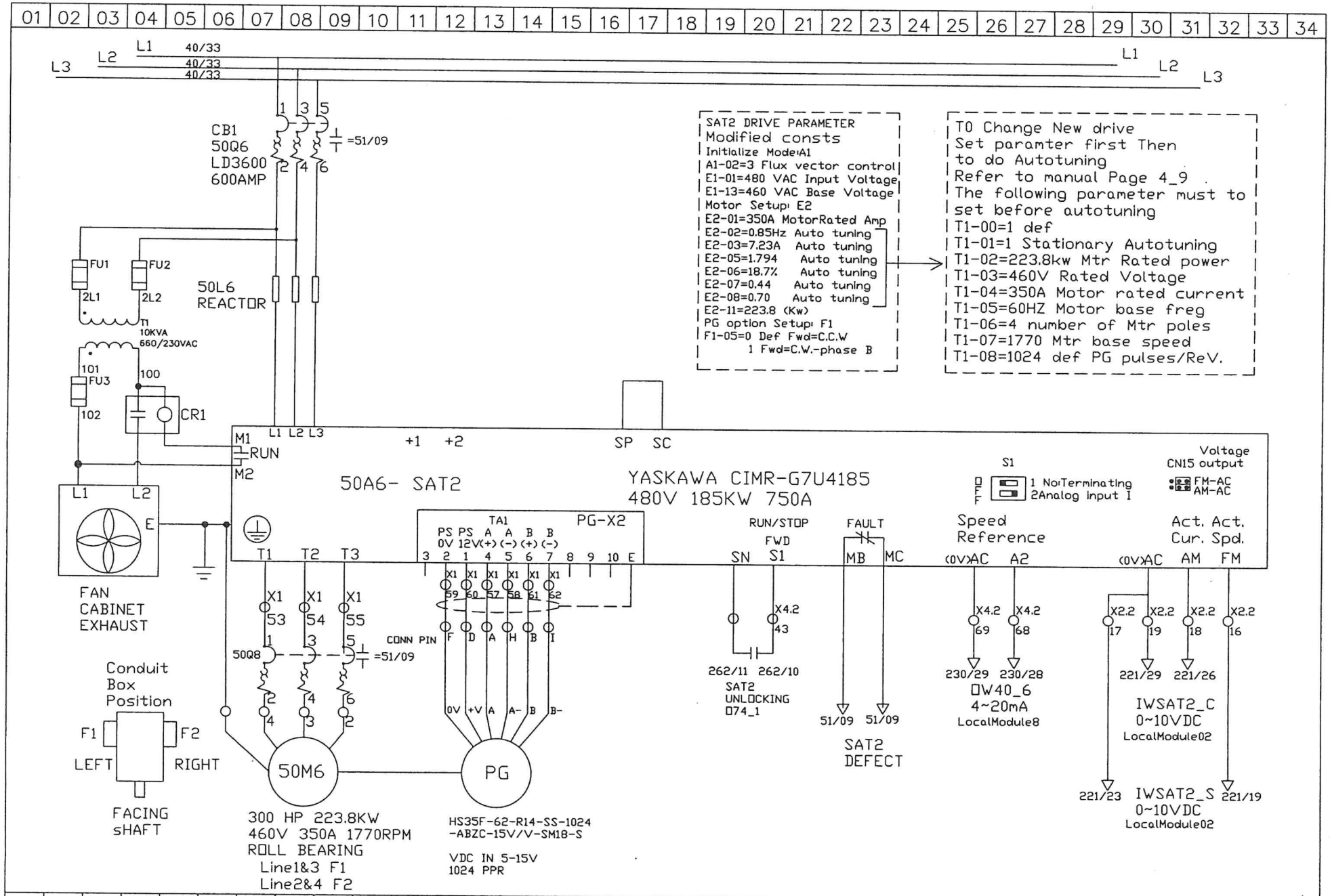

INTEPLAST GROUP, Ltd.
AMTOPP DIVI. M/E DEPT.

SAT2 G7 AC DRIVE

DRAWN BY	VINCENT HUANG
CHECKED BY	
DRAWING DESCRIPTION	F16
DRAWING NO.	
DRAWN DATE:	01-25-2016
Page #	50
Total	
MATERIAL	
SCALE	NONE
UNIT	MM

REV. NO	REV. DESCRIPTION	REV. BY:	REV. DATE

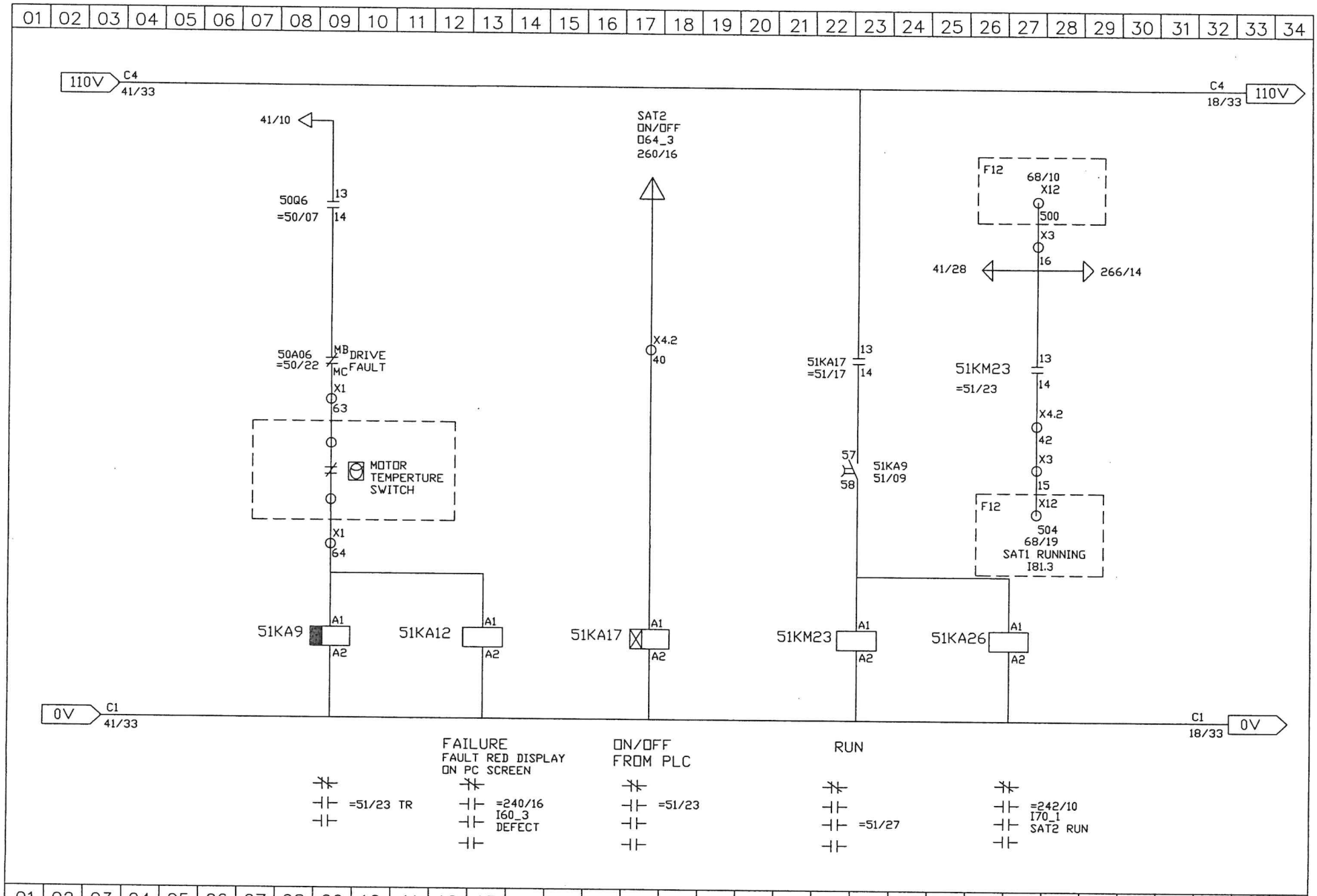

INTEPLAST GROUP, Ltd. AMTOPP DIVI. M/E DEPT.	AUXILIARY EXTRUDER SAT2 MOTOR CONTROL CIRCUIT G7 DRIVE				DRAWING DESCRIPTION	F16	Page #	51	
DRAWN BY VINCENT HUANG							Total		
CHECKED BY					DRAWING NO.		MATERIAL		
		REV. NO	REV. DESCRIPTION	REV. BY	REV. DATE	DRAWN DATE 11-11-2018	SCALE NONE	UNIT	MM

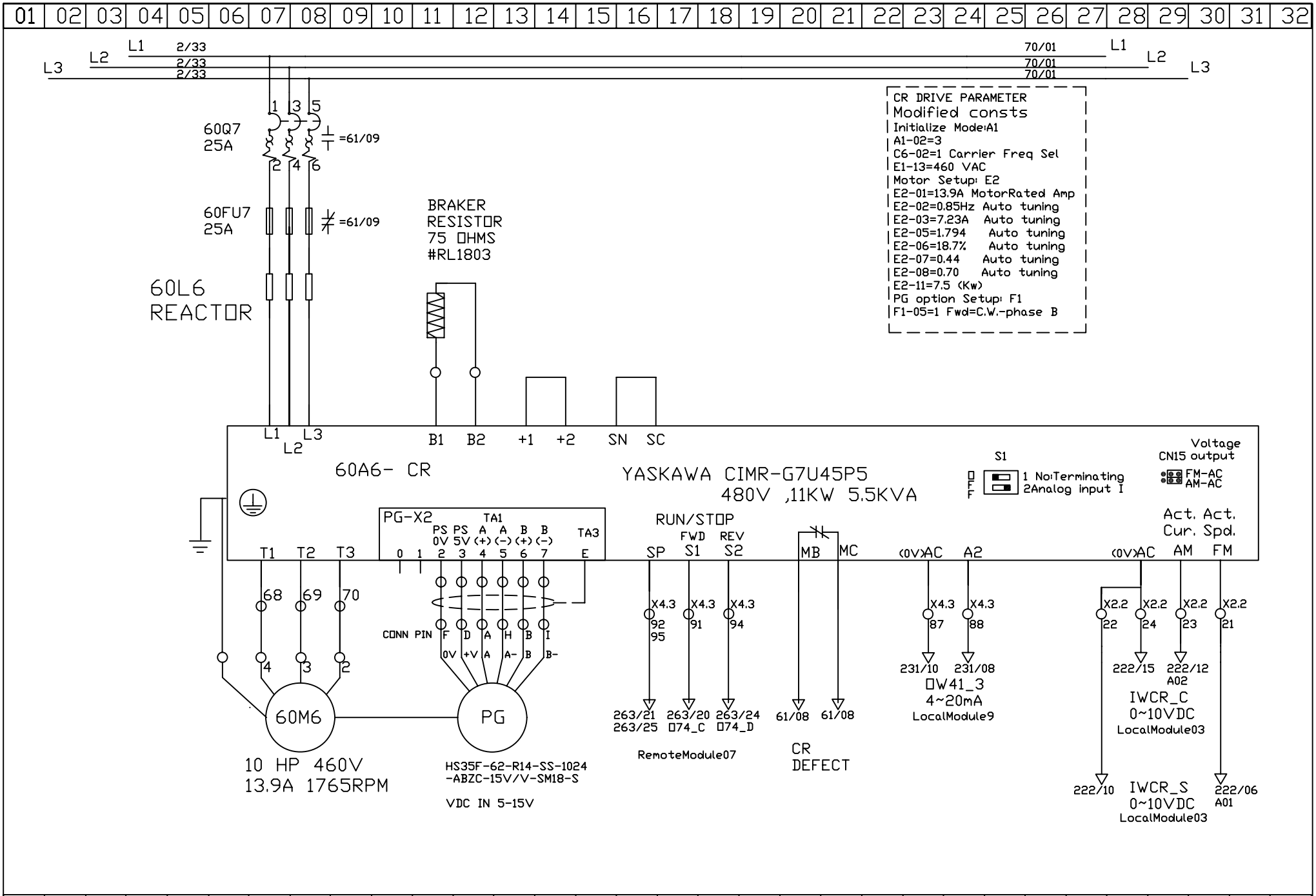

INTEPLAST GROUP, Ltd. AMTOPP DIVI. M/E DEPT.	CR AC DRIVE			DRAWING DESCRIPTION	AC DRIVE AC MOTOR	Page #	60
DRAWN BY VINCENT HUANG				DRAWING NO.		Total	
CHECKED BY	REV. NO	REV. DESCRIPTION	REV. BY:	REV. DATE	DRAWN DATE: 10-31-2011	MATERIAL	
						SCALE NONE	UNIT MM

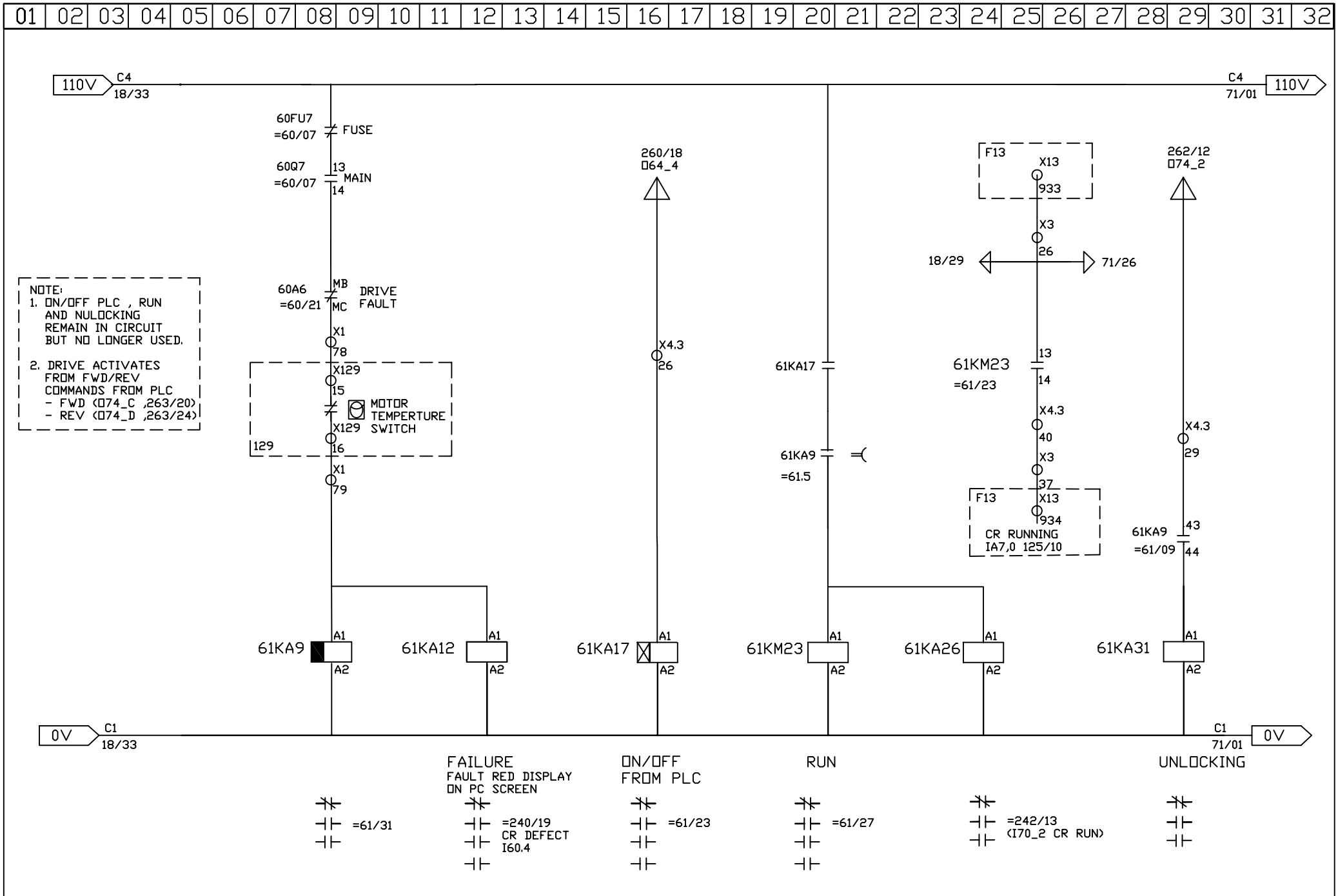

INTEPLAST GROUP, Ltd. AMTOPP DIVI. M/E DEPT.	CR CONTROL CIRCUIT FOR AC DRIVE G7	DRAWING DESCRIPTION	BARDAC DRIVE
DRAWN BY VINCENT HUANG		DRAWING NO.	195867S
CHECKED BY		DRAWN DATE:	10-12-2011

REV. NO	REV. DESCRIPTION	REV. BY:	REV. DATE

Page #	61
Total	
MATERIAL	
SCALE	NONE
UNIT	MM

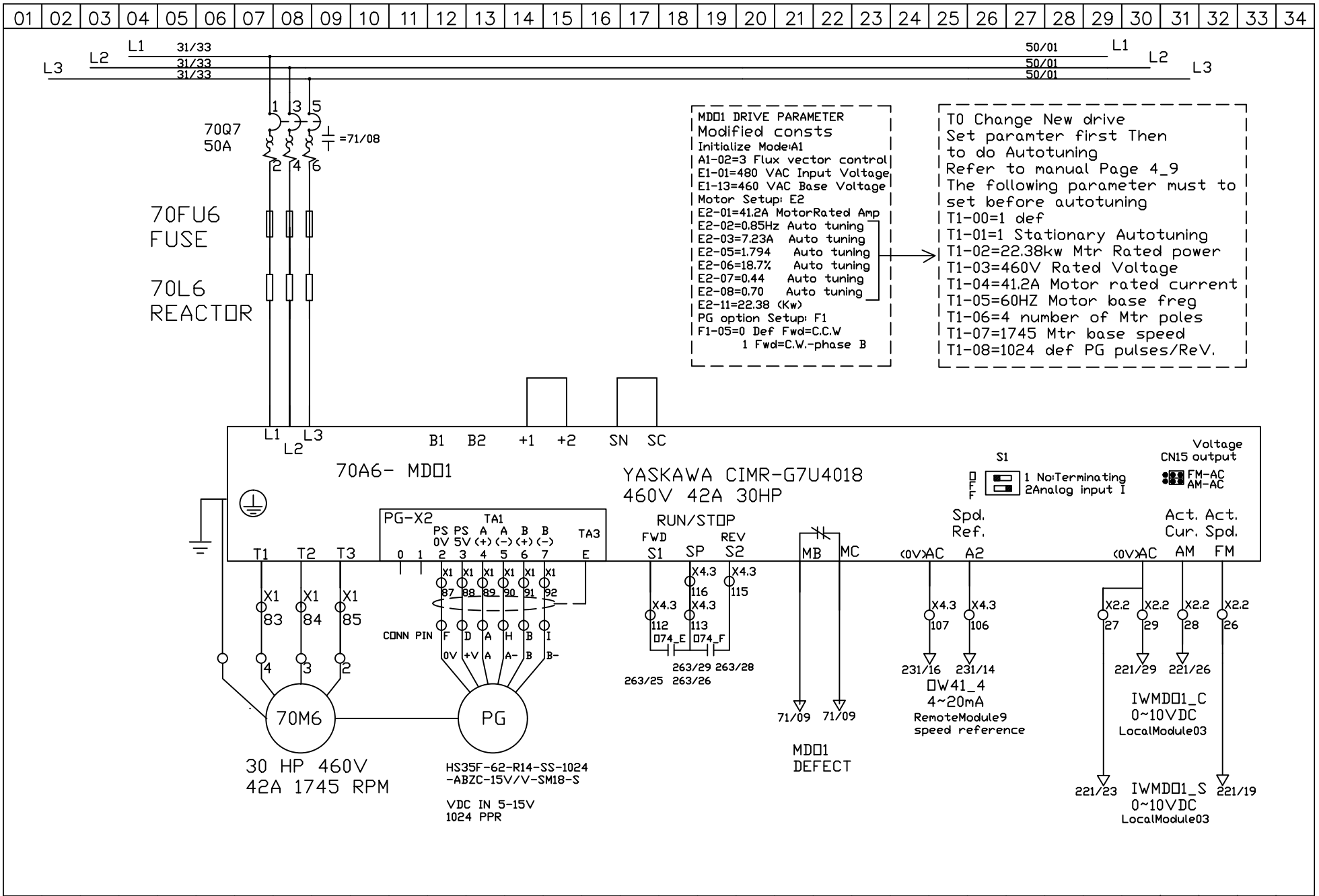

INTEPLAST GROUP, Ltd. AMTOPP DIVI. M/E DEPT.	MD□1 G7 AC DRIVE	DRAWING DESCRIPTION	F16
DRAWN BY VINCENT HUANG		DRAWING NO.	
CHECKED BY	REV. NO / REV. DESCRIPTION / REV. BY: / REV. DATE	DRAWN DATE: 02-03-2016	

Page #	70
Total	
MATERIAL	
SCALE	NONE
UNIT	MM

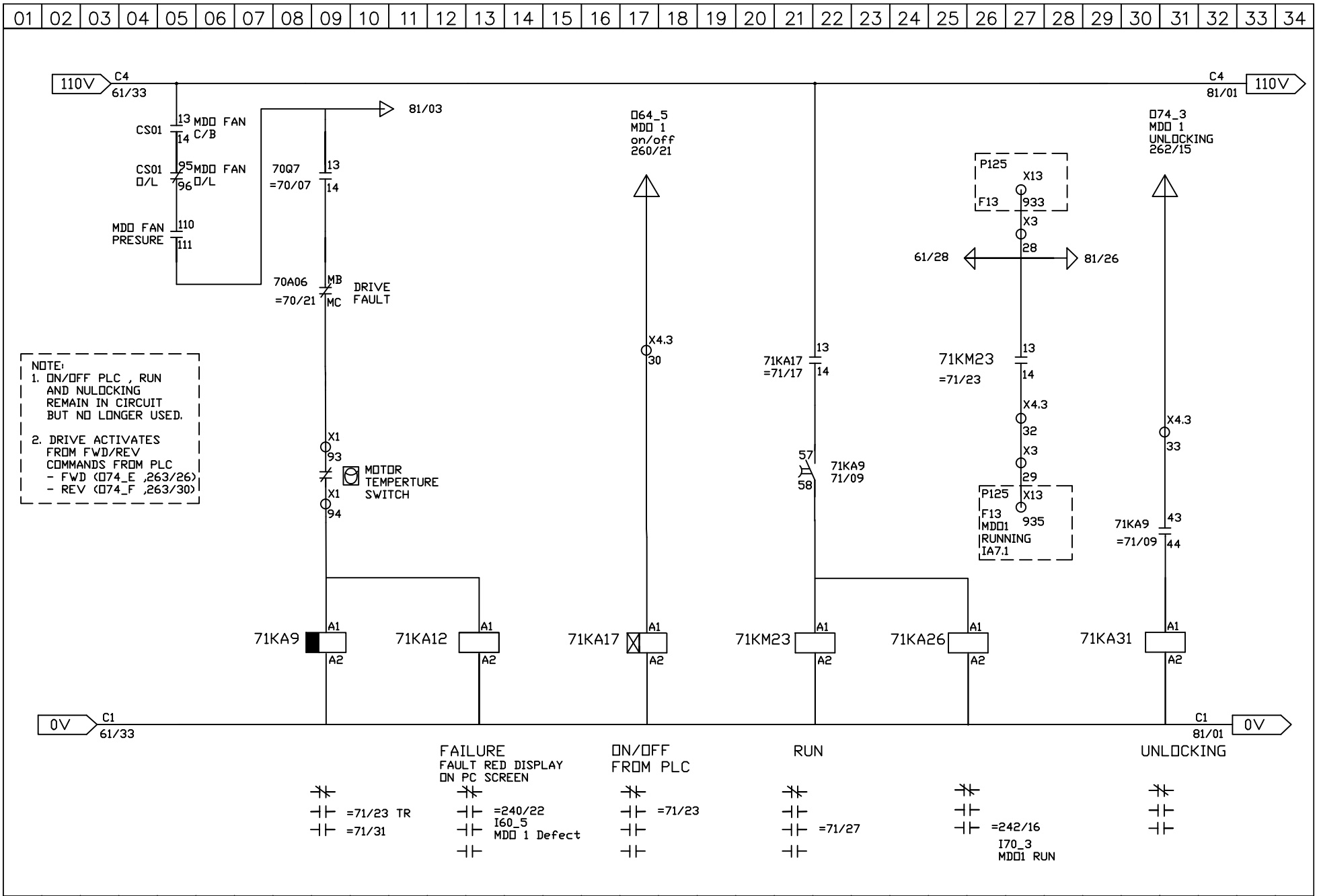

01	02	03	04	05	06	07	08	09	10	11	12	13	14	15	16	17	18	19	20	21	22	23	24	25	26	27	28	29	30	31	32	33	34

INTEPLAST GROUP, Ltd. AMTOPP DIVI. M/E DEPT.	SLOW MDO1 MOTOR CONTROL CIRCUIT					DRAWING DESCRIPTION	Controlr circuit	Page #	71		
								Total			
DRAWN BY ROY CHEN						DRAWING NO.		MATERIAL			
CHECKED BY		REV. NO	REV. DESCRIPTION	REV. BY:	REV. DATE	DRAWN DATE: 03-28-2016		SCALE	NONE	UNIT	MM

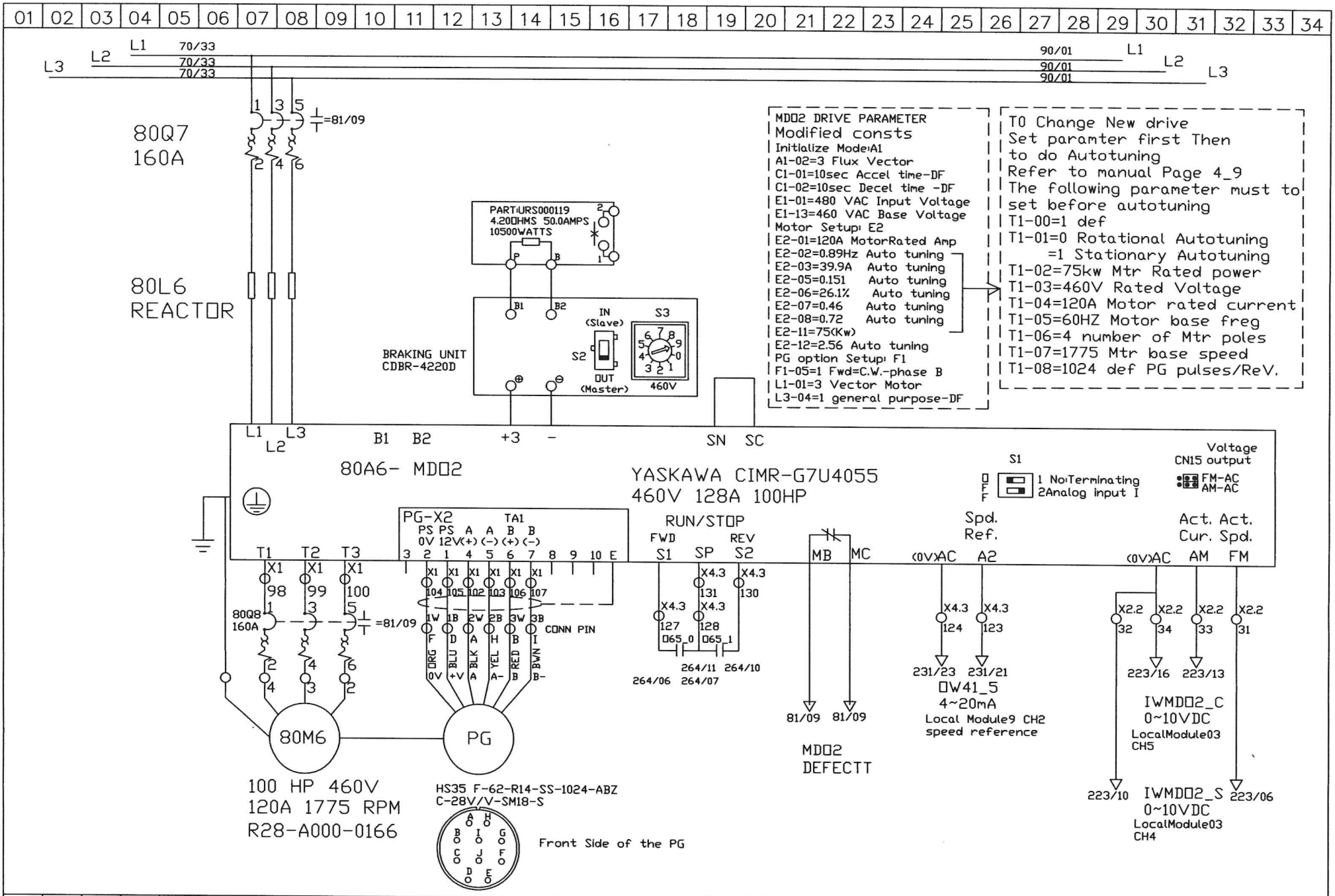

INTEPLAST GROUP, Ltd. AMTOPP DIVI. M/E DEPT.	MD02 G7 AC DRIVE	V1	BRAKING UNIT	VINCENT HUANG	05-15-18	DRAWING DESCRIPTION	F16	Page #	80
DRAWN BY VINCENT HUANG								Total	
CHECKED BY						DRAWING NO.		MATERIAL	
		REV. NO	REV. DESCRIPTION	REV. BY:	REV. DATE	DRAWN DATE: 06-05-2018		SCALE NONE	UNIT MM

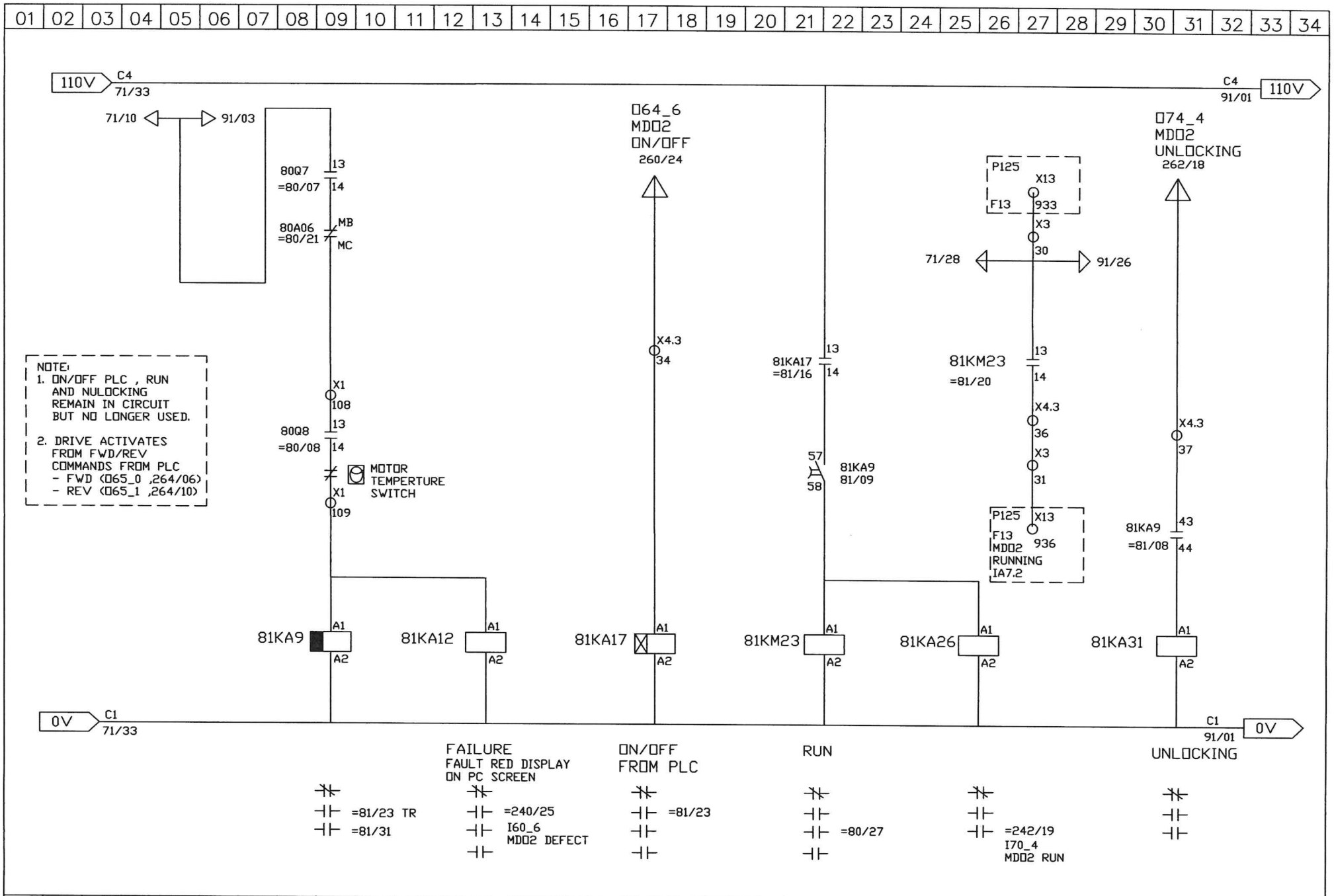

01	02	03	04	05	06	07	08	09	10	11	12	13	14	15	16	17	18	19	20	21	22	23	24	25	26	27	28	29	30	31	32	33	34

INTEPLAST GROUP, Ltd.
AMTOPP DIVI. M/E DEPT.

DRAWN BY ROY CHEN
CHECKED BY Vincent Huang

FAST MDO2 MOTOR CONTROL CIRCUIT G7 AC DRIVE

REV. NO	REV. DESCRIPTION	REV. BY:	REV. DATE

DRAWING DESCRIPTION	Control circuit	Page #	81
		Total	
DRAWING NO.		MATERIAL	
DRAWN DATE: 06-05-2018		SCALE	NONE
		UNIT	MM

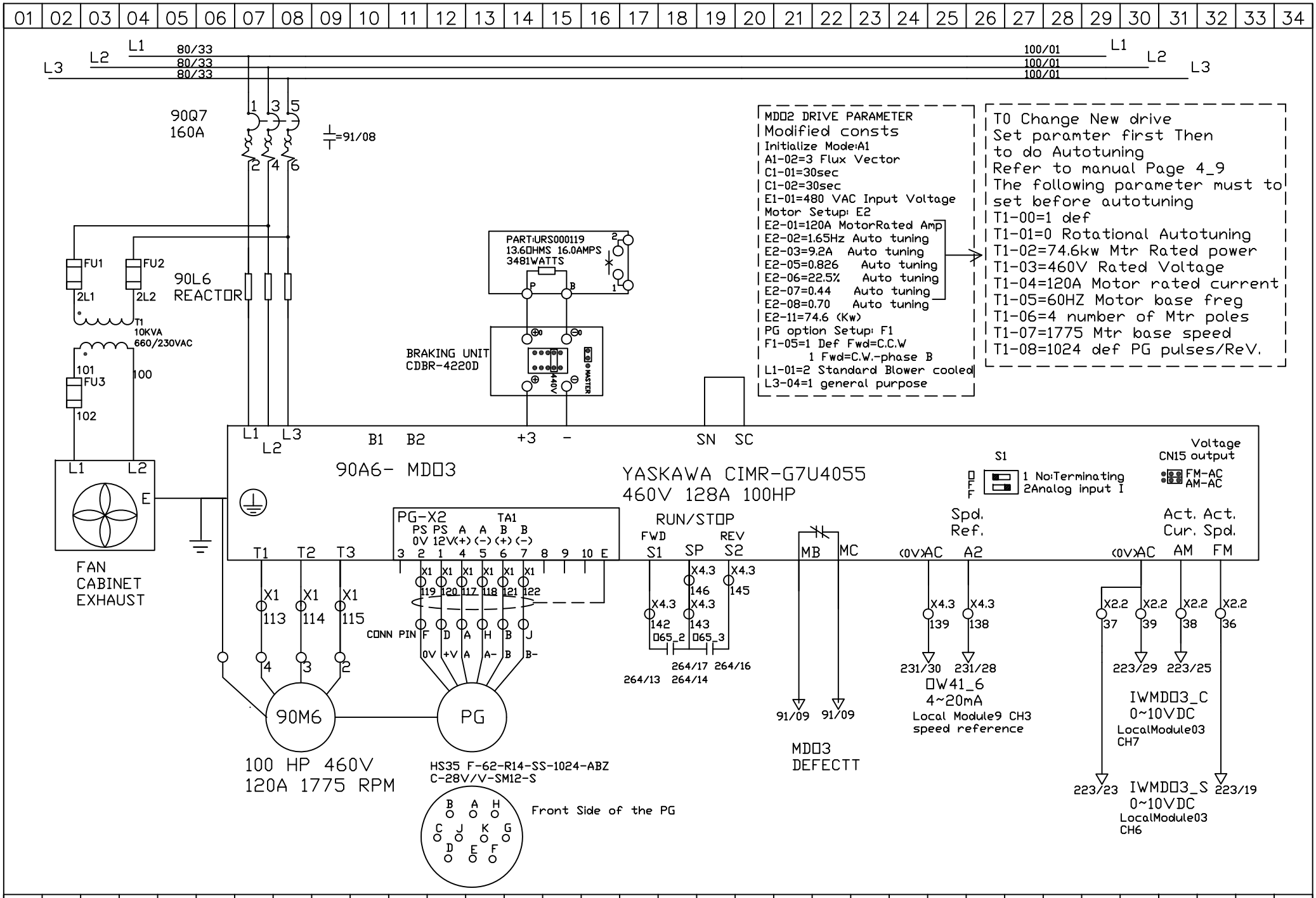

01	02	03	04	05	06	07	08	09	10	11	12	13	14	15	16	17	18	19	20	21	22	23	24	25	26	27	28	29	30	31	32	33	34

INTEPLAST GROUP, Ltd. AMTOPP DIVI. M/E DEPT.	MD□3 G7 AC DRIVE					DRAWING DESCRIPTION	F16	Page #	90		
DRAWN BY VINCENT HUANG						DRAWING NO.		Total			
CHECKED BY		REV. NO	REV. DESCRIPTION	REV. BY:	REV. DATE	DRAWN DATE: 12-15-2017		MATERIAL			
								SCALE	NONE	UNIT	MM

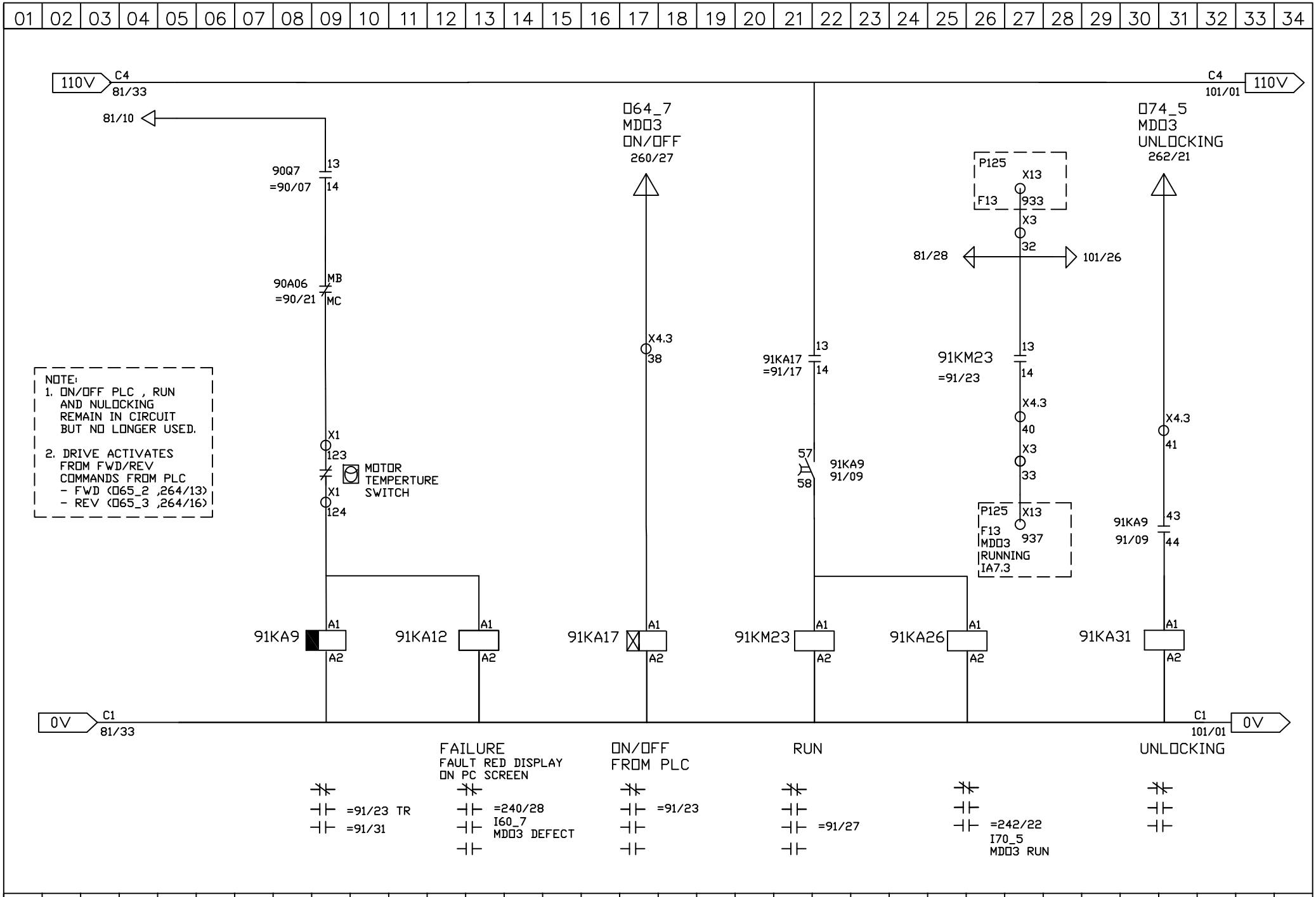

01	02	03	04	05	06	07	08	09	10	11	12	13	14	15	16	17	18	19	20	21	22	23	24	25	26	27	28	29	30	31	32	33	34

INTEPLAST GROUP, Ltd.
AMT□PP DIVI. M/E DEPT.

DRAWN BY VINCENT HUANG

CHECKED BY

FAST MD□3 M□T□R CONTROL CIRCUIT

REV. NO	REV. DESCRIPTION	REV. BY:	REV. DATE

DRAWING DESCRIPTION	Control circuit	Page #	91
		Total	
DRAWING NO.		MATERIAL	
DRAWN DATE: 12-15-2017		SCALE NONE	UNIT MM

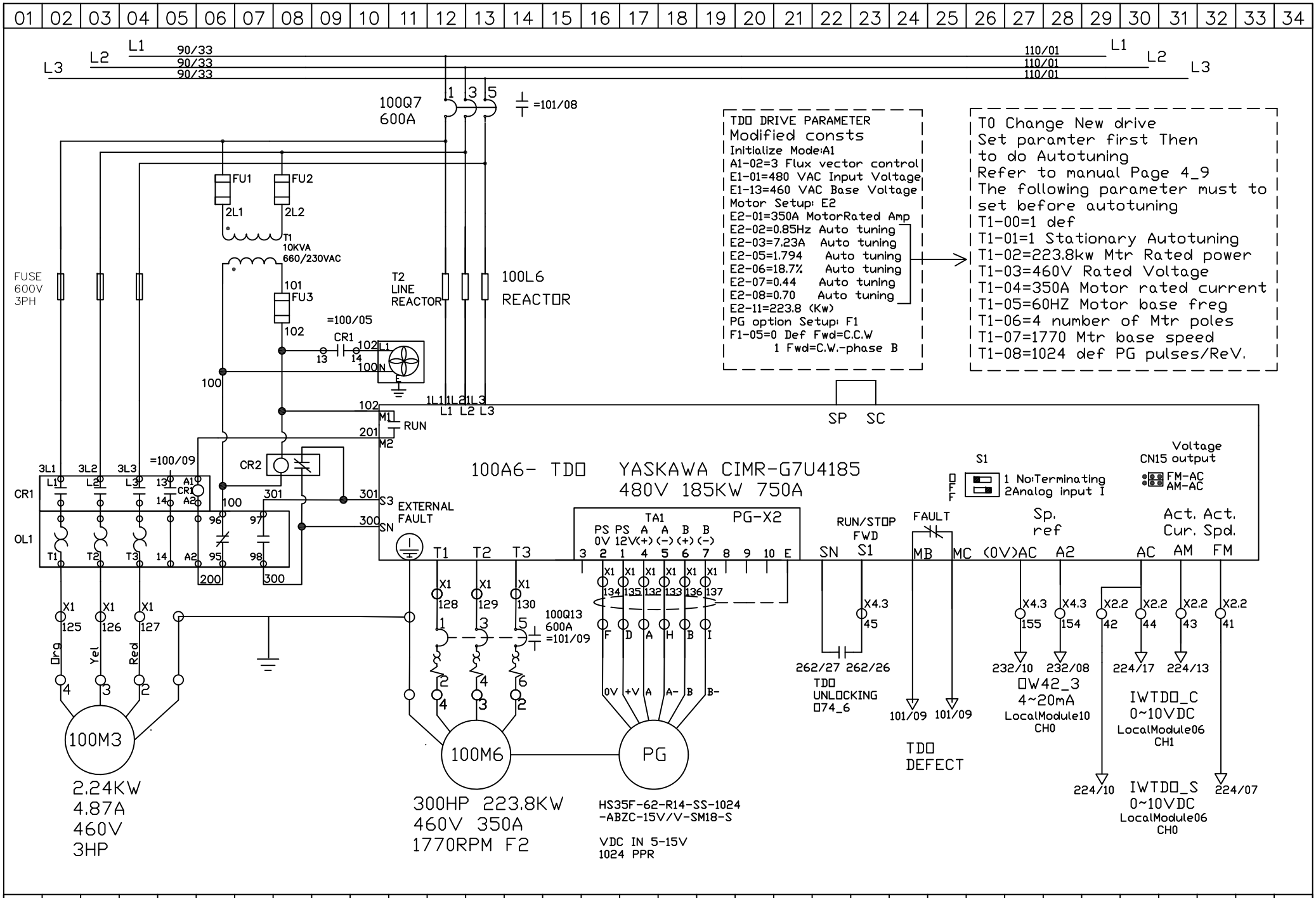

TDO DRIVE PARAMETER
Modified consts
Initialize Mode:A1
A1-02=3 Flux vector control
E1-01=480 VAC Input Voltage
E1-13=460 VAC Base Voltage
Motor Setup: E2
E2-01=350A MotorRated Amp
E2-02=0.85Hz Auto tuning
E2-03=7.23A Auto tuning
E2-05=1.794 Auto tuning
E2-06=18.7% Auto tuning
E2-07=0.44 Auto tuning
E2-08=0.70 Auto tuning
E2-11=223.8 (Kw)
PG option Setup: F1
F1-05=0 Def Fwd=C.C.W
1 Fwd=C.W.-phase B

TO Change New drive
Set paramter first Then
to do Autotuning
Refer to manual Page 4_9
The following parameter must to
set before autotuning
T1-00=1 def
T1-01=1 Stationary Autotuning
T1-02=223.8kw Mtr Rated power
T1-03=460V Rated Voltage
T1-04=350A Motor rated current
T1-05=60HZ Motor base freg
T1-06=4 number of Mtr poles
T1-07=1770 Mtr base speed
T1-08=1024 def PG pulses/ReV.

INTEPLAST GROUP, Ltd. AMTOPP DIVI. M/E DEPT.	TDO G7 AC DRIVE			DRAWING DESCRIPTION	F16	Page #	100
DRAWN BY VINCENT HUANG				DRAWING NO. 195867S		Total	
CHECKED BY		REV. NO / REV. DESCRIPTION	REV. BY: / REV. DATE	DRAWN DATE: 01-27-2016		MATERIAL	
						SCALE NONE	UNIT MM

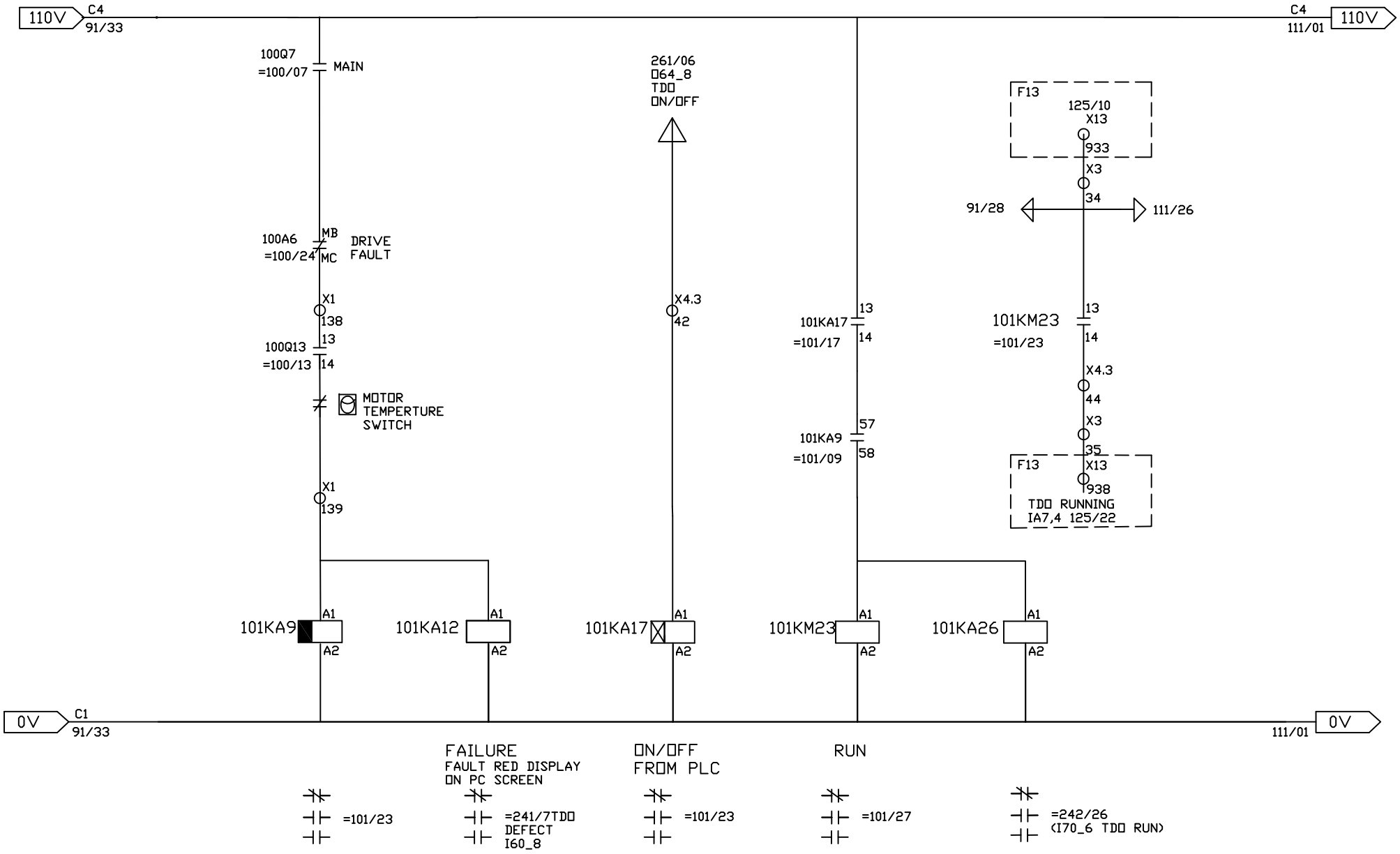

INTEPLAST GROUP, Ltd. AMTOPP DIVI. M/E DEPT.	TDO CONTROL CIRCUIT FOR AC DRIVE G7			DRAWING DESCRIPTION	F16
DRAWN BY VINCENT HUANG				DRAWING NO.	195867S
CHECKED BY		REV. NO	REV. DESCRIPTION	REV. BY:	REV. DATE
				DRAWN DATE:	11-11-2018

Page #	101		
Total			
MATERIAL			
SCALE	NONE	UNIT	MM

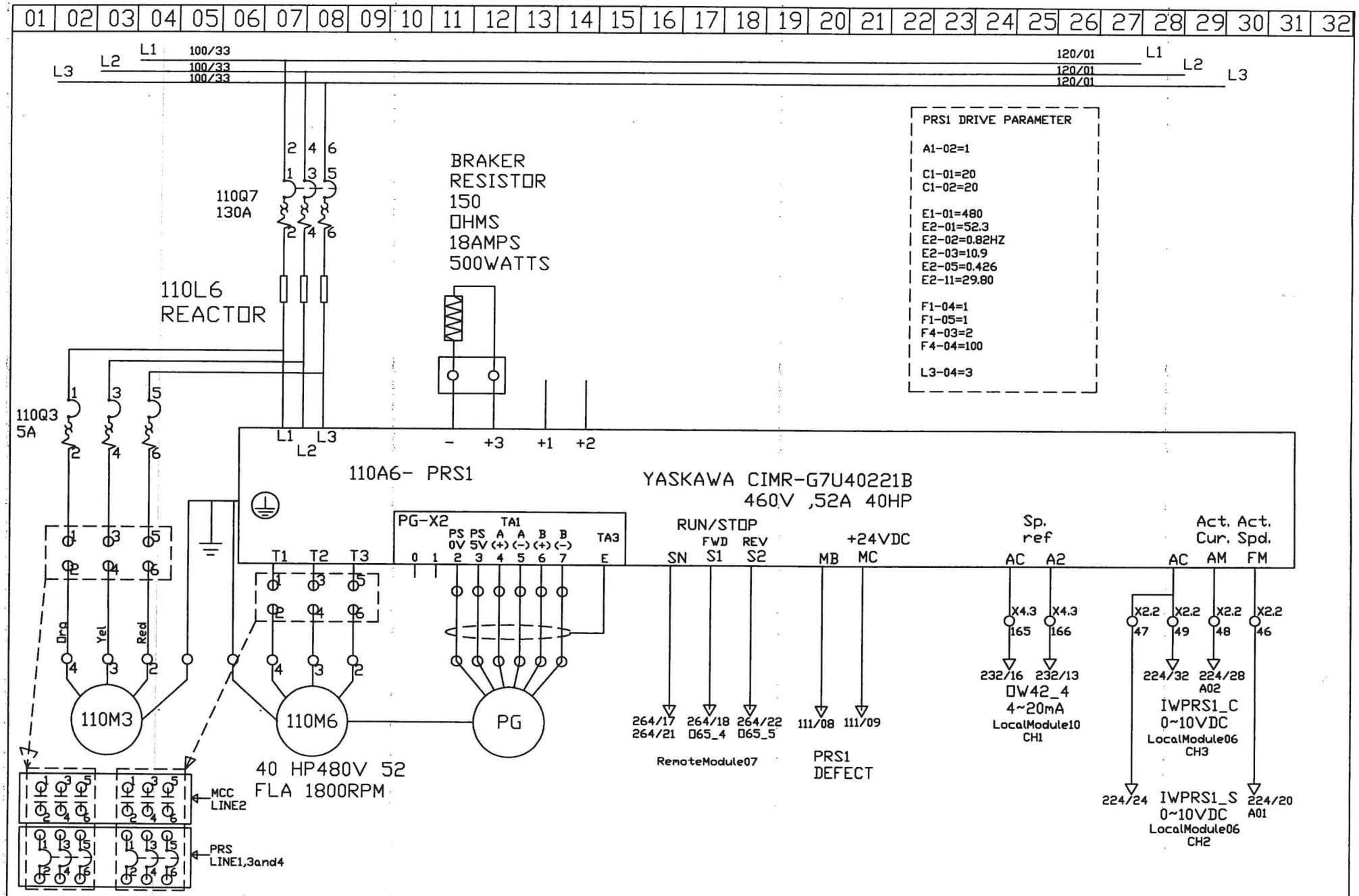

PRS1 DRIVE PARAMETER

A1-02=1

C1-01=20
C1-02=20

E1-01=480
E2-01=52.3
E2-02=0.82HZ
E2-03=10.9
E2-05=0.426
E2-11=29.80

F1-04=1
F1-05=1
F4-03=2
F4-04=100

L3-04=3

INTEPLAST GROUP, Ltd. AMTOPP DIVI. M/E DEPT.	PRS1 AC DRIVE			DRAWING DESCRIPTION	F16	Page #	110
DRAWN BY VINCENT HUANG						Total	
CHECKED BY				DRAWING NO. 195867S		MATERIAL	
		REV. NO	REV. DESCRIPTION	REV. BY	REV. DATE	DRAWN DATE 03-15-2011	SCALE NONE UNIT MM

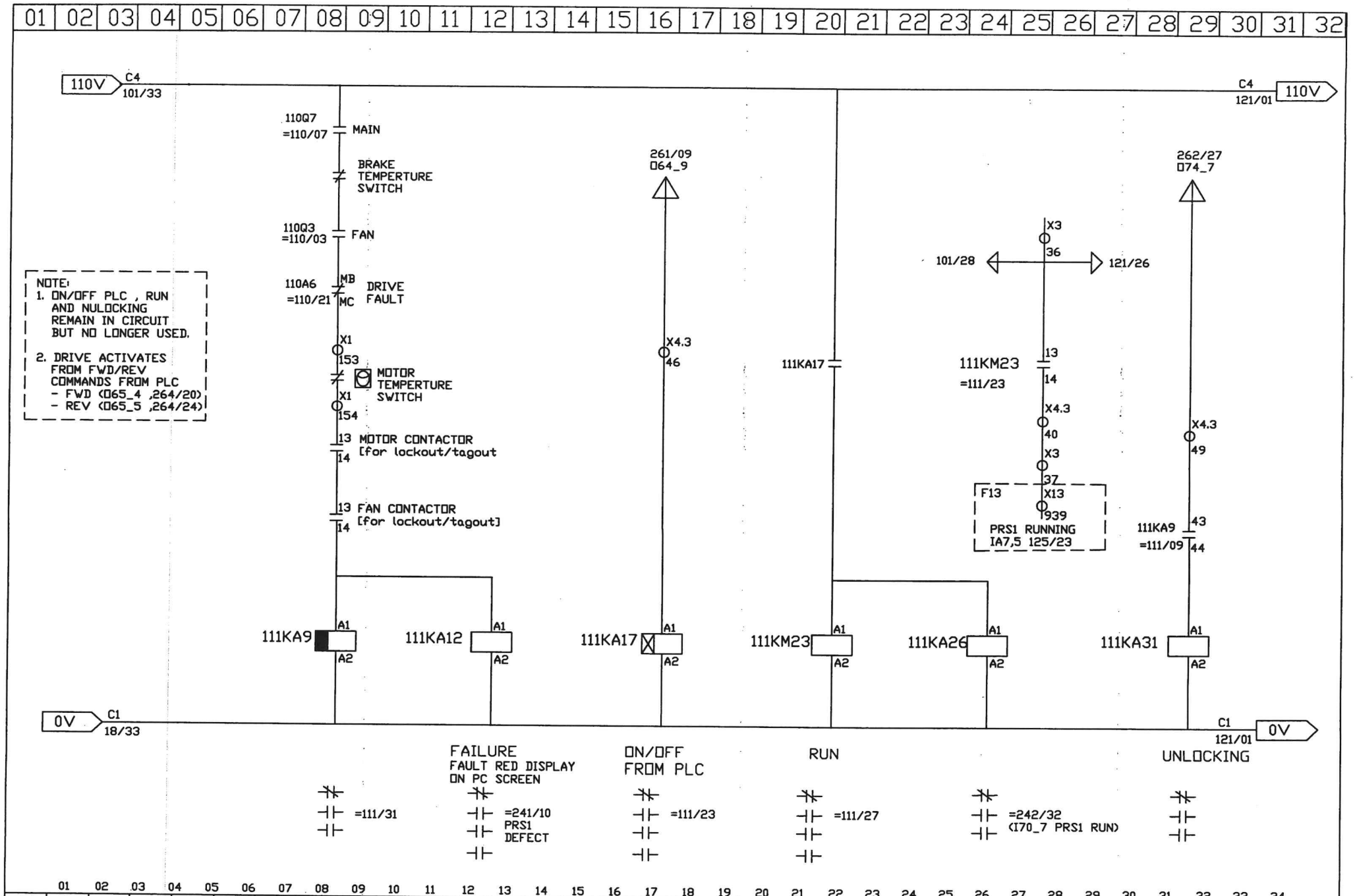

INTEPLAST GROUP, Ltd. AMTOPP DIVI. M/E DEPT.	PRS1 CONTROL CIRCUIT FOR AC DRIVE G7			DRAWING DESCRIPTION	F16	Page #	111
DRAWN BY VINCENT HUANG						Total	
CHECKED BY				DRAWING NO. 195867S		MATERIAL	
		REV. NO	REV. DESCRIPTION	REV. BY:	REV. DATE	DRAWN DATE: 03-15-2011	SCALE NONE UNIT MM

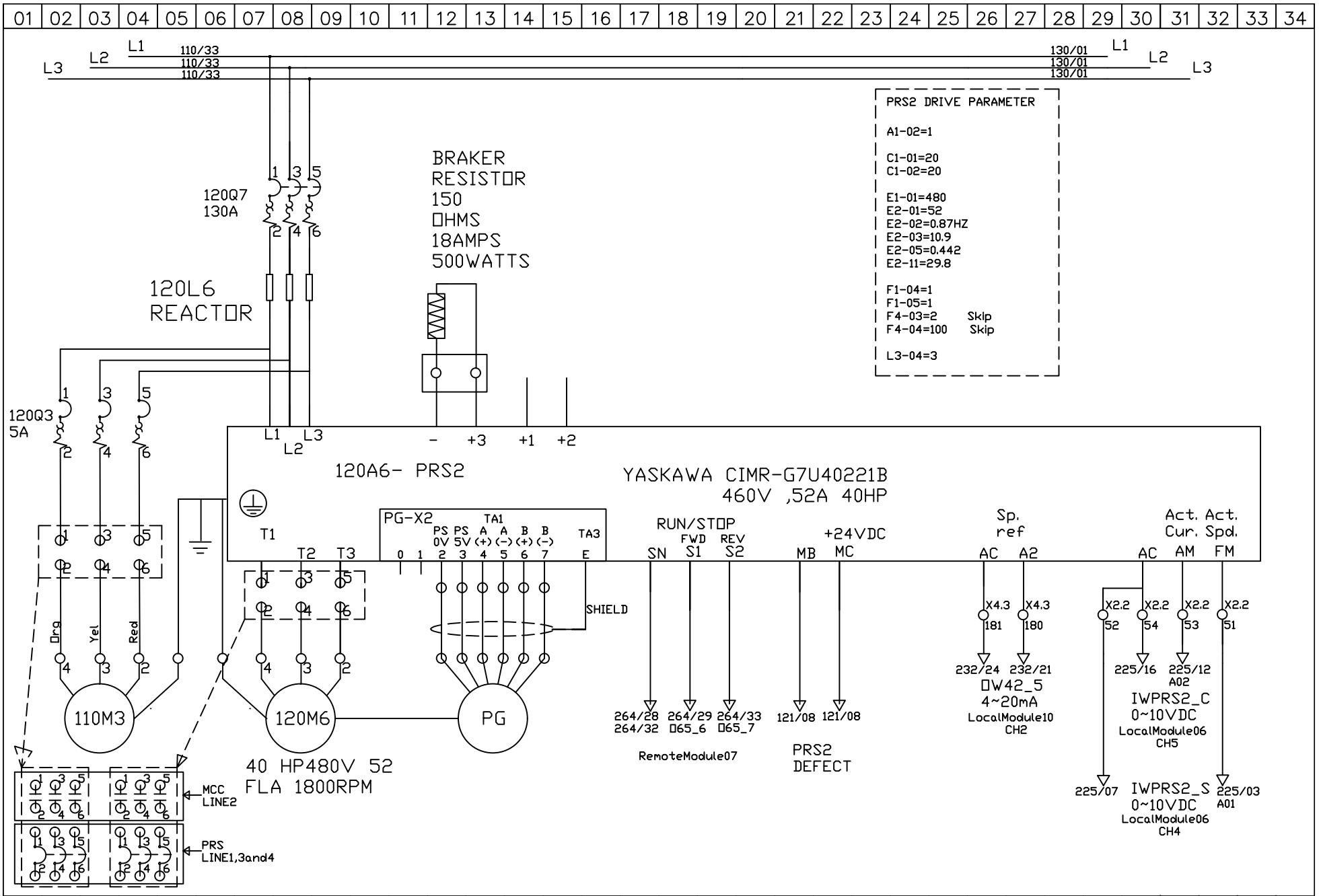

INTEPLAST GROUP, Ltd. AMTOPP DIVI. M/E DEPT.	PRS2 AC DRIVE	DRAWING DESCRIPTION	F16
DRAWN BY VINCENT HUANG		DRAWING NO.	
CHECKED BY		DRAWN DATE: 03-15-2011	

REV. NO	REV. DESCRIPTION	REV. BY:	REV. DATE

Page #	120
Total	
MATERIAL	
SCALE	NONE
UNIT	MM

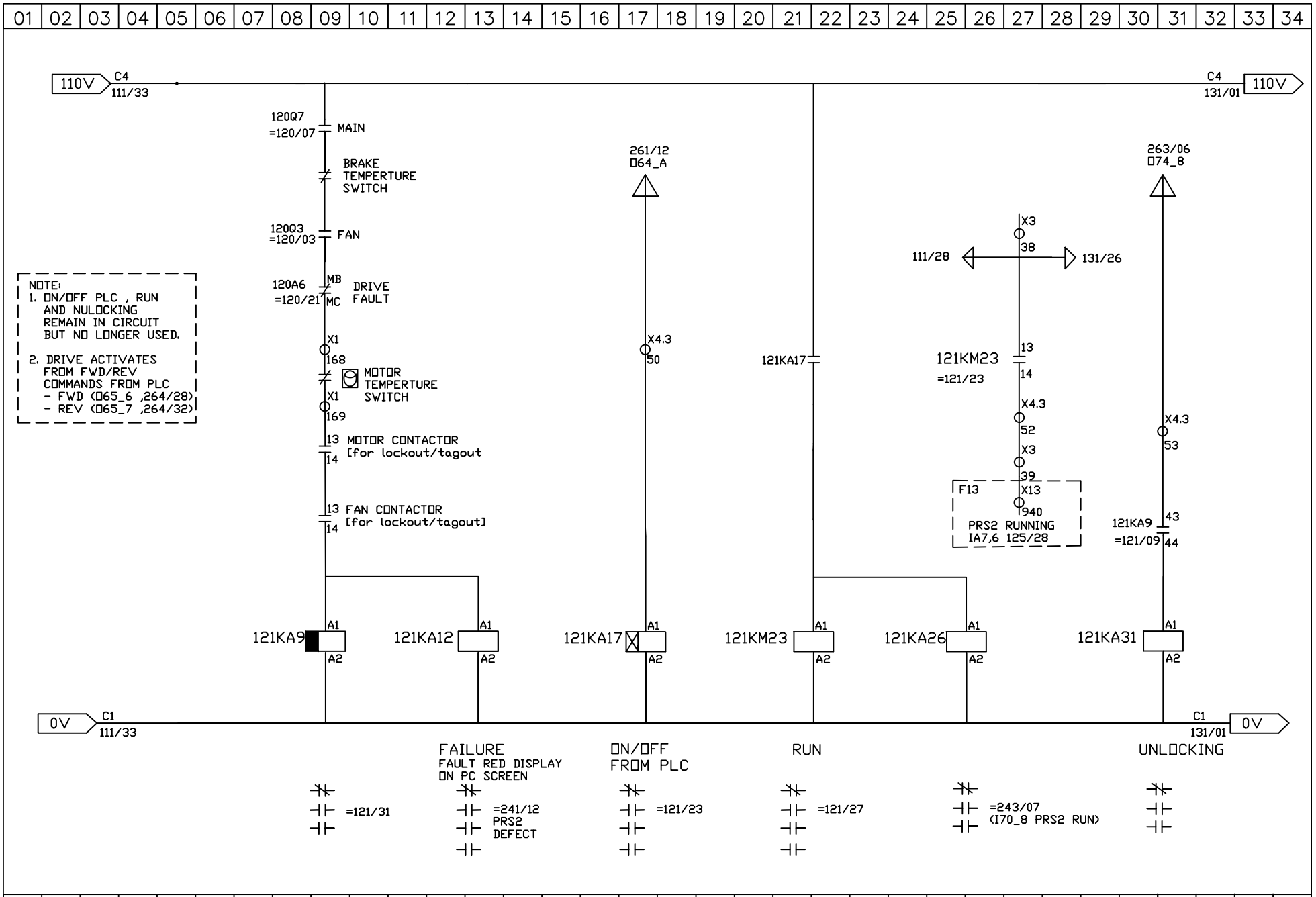

INTEPLAST GROUP, Ltd. AMTOPP DIVI. M/E DEPT.	PRS2 CONTROL CIRCUIT FOR AC DRIVE G7		DRAWING DESCRIPTION	F16	Page # 121
DRAWN BY VINCENT HUANG			DRAWING NO.	195867S	Total / MATERIAL
CHECKED BY		REV. NO / REV. DESCRIPTION / REV. BY / REV. DATE	DRAWN DATE:	03-15-2011	SCALE NONE / UNIT MM

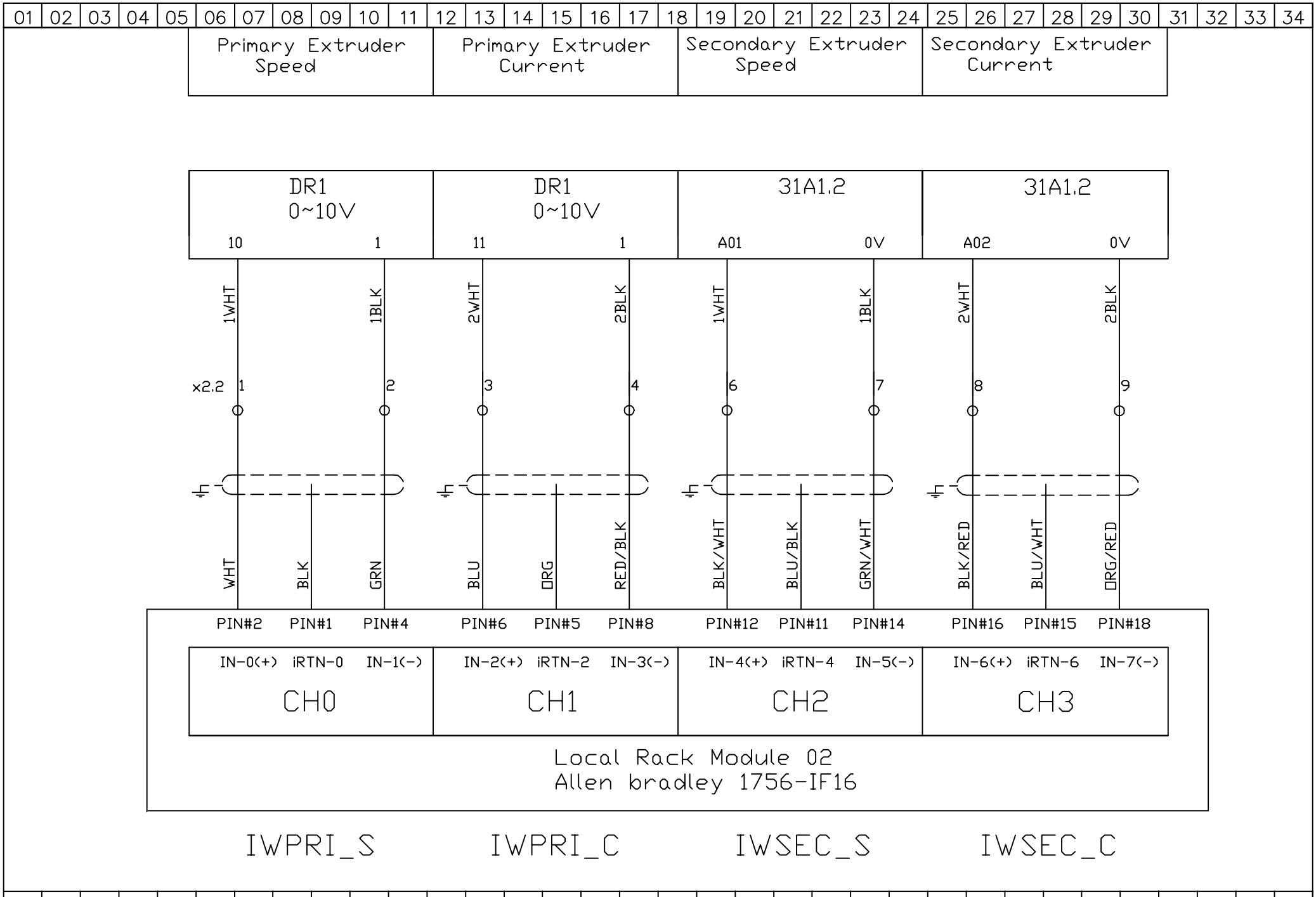

INTEPLAST GROUP, Ltd. AMTOPP DIVI. M/E DEPT.	AB-Analog input card bardac Line2 and Line 4			DRAWING DESCRIPTION	F16	Page #	
						Total	220
DRAWN BY VINCENT HUANG				DRAWING NO.		MATERIAL	
CHECKED BY		REV. NO	REV. DESCRIPTION	REV. BY:	REV. DATE	DRAWN DATE: 03-19-2013	SCALE NONE UNIT MM

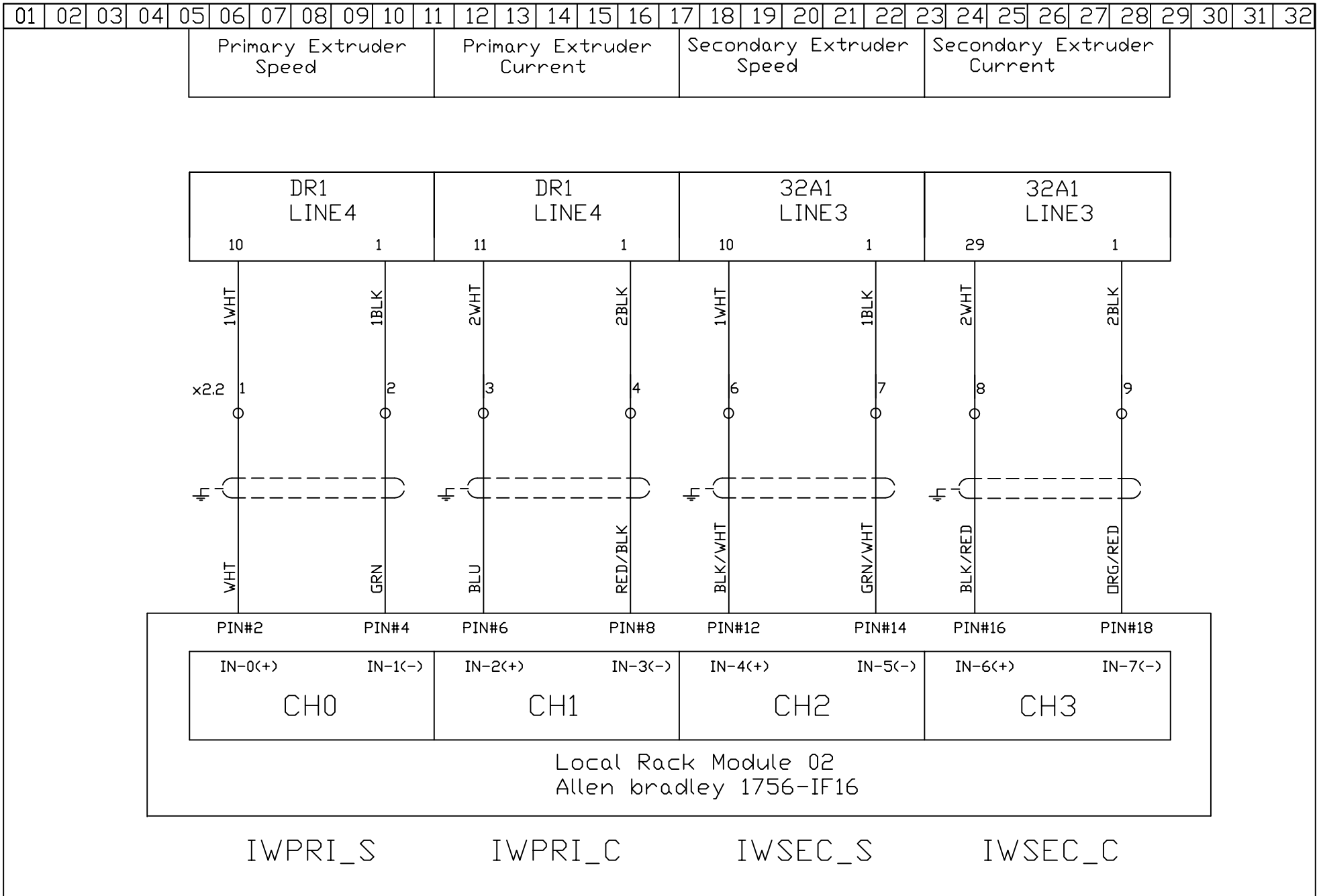

INTEPLAST GROUP, Ltd. AMTOPP DIVI. M/E DEPT.	AB-Analog input card				DRAWING DESCRIPTION	Page #	
DRAWN BY VINCENT HUANG					DRAWING NO.	Total	220
CHECKED BY		REV. NO	REV. DESCRIPTION	REV. BY:	REV. DATE	DRAWN DATE: 05-03-2010	MATERIAL
						SCALE NONE	UNIT MM

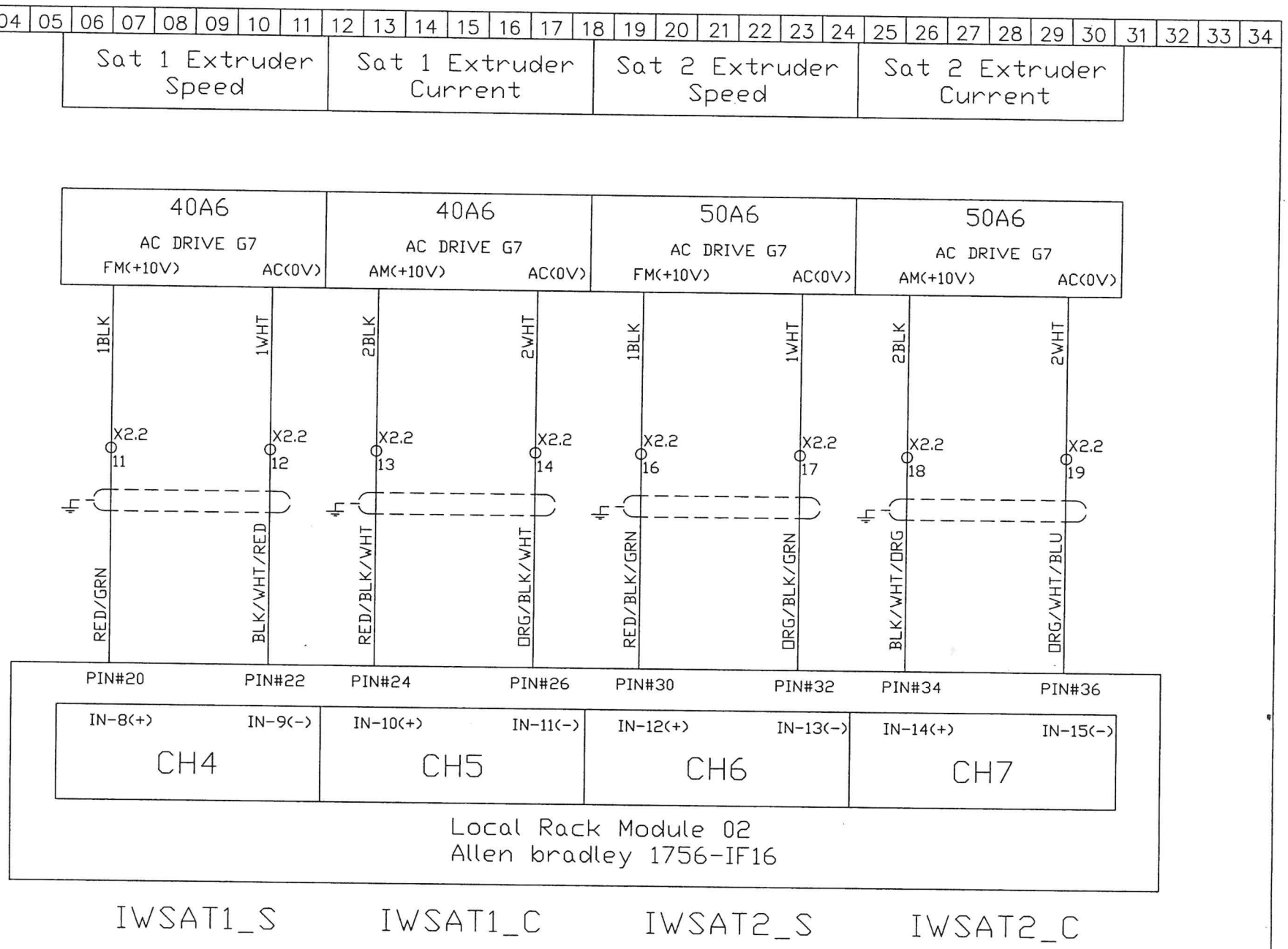

INTEPLAST GROUP, Ltd.
AMTOPP DIVI. M/E DEPT.

DRAWN BY VINCENT HUANG

CHECKED BY

AB-Analog input card
FOR G7 AC DRIVE

REV. NO	REV. DESCRIPTION	REV. BY:	REV. DATE

DRAWING DESCRIPTION	F16	Page #	
		Total	221
DRAWING NO.		MATERIAL	
DRAWN DATE: 01-26-2016		SCALE NONE	UNIT MM

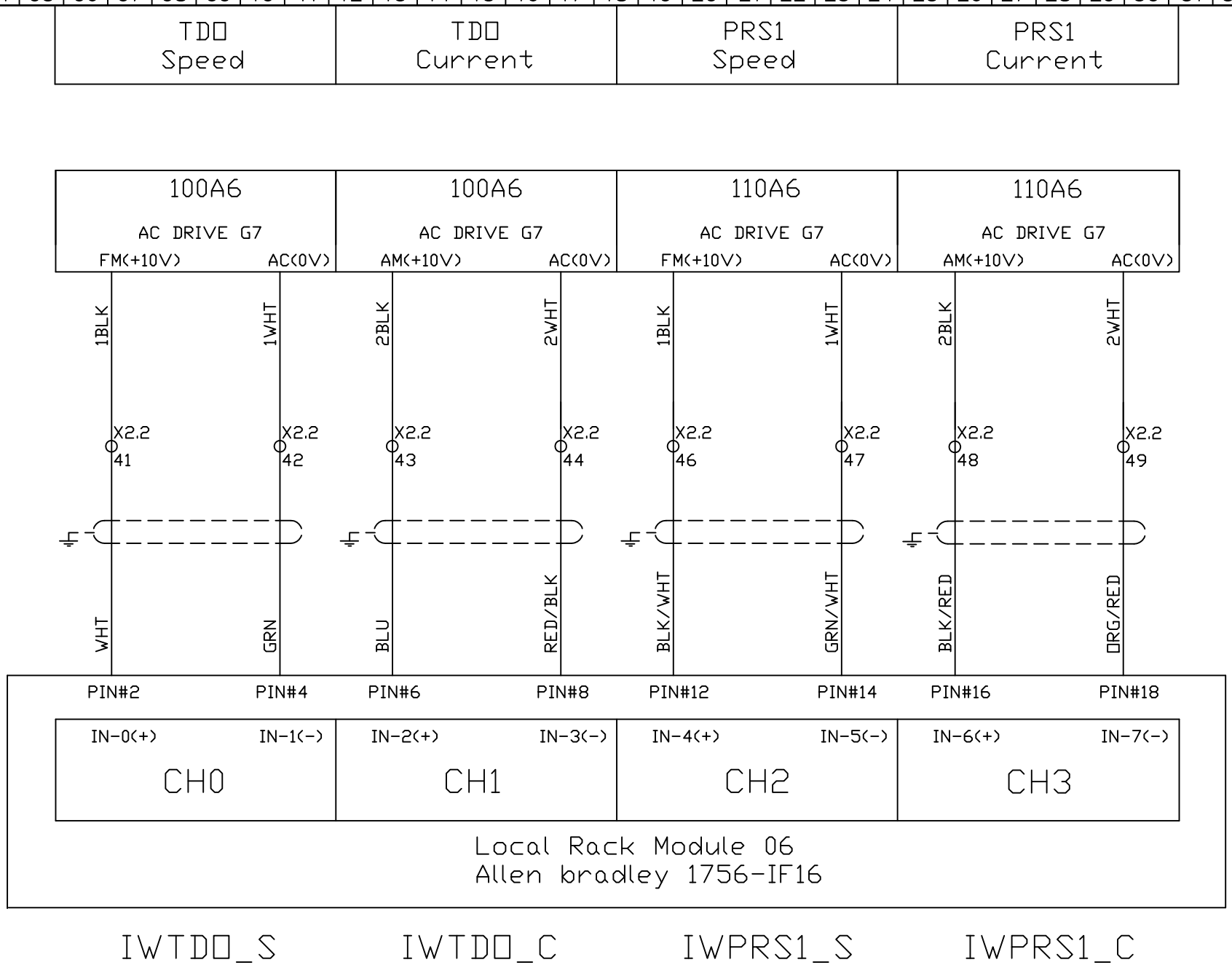

INTEPLAST GROUP, Ltd. AMTOPP DIVI. M/E DEPT.	AB-Analog input card FOR G7 DRIVE	DRAWING DESCRIPTION	Page #
DRAWN BY ROY CHEN		DRAWING NO.	Total 224
CHECKED BY VINCENT HUANG		DRAWN DATE: 1-27-2016	MATERIAL
			SCALE NONE UNIT MM

REV. NO	REV. DESCRIPTION	REV. BY:	REV. DATE

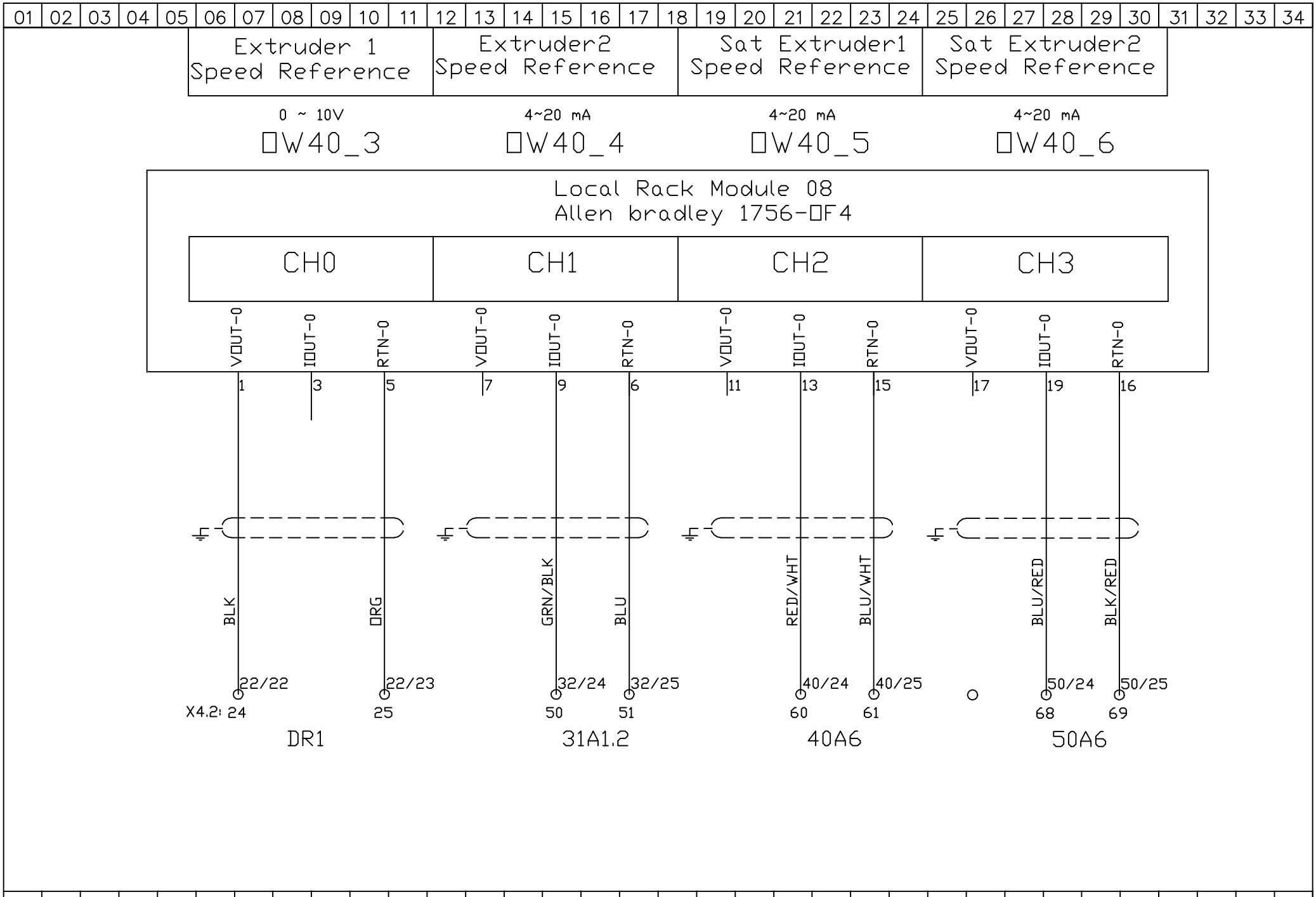

INTEPLAST GR□UP, Ltd. AMT□PP DIVI. M/E DEPT.	Analog □utput Card for Line2 and Line4 with Bardac	DRAWING DESCRIPTI□N	F16
DRAWN BY VINCENT HUANG		DRAWING N□.	
CHECKED BY		DRAWN DATE: 03-19-2013	

REV. N□	REV. DESCRIPTI□N	REV. BY:	REV. DATE

Page #	230
Total	
MATERIAL	
SCALE	N□NE
UNIT	MM

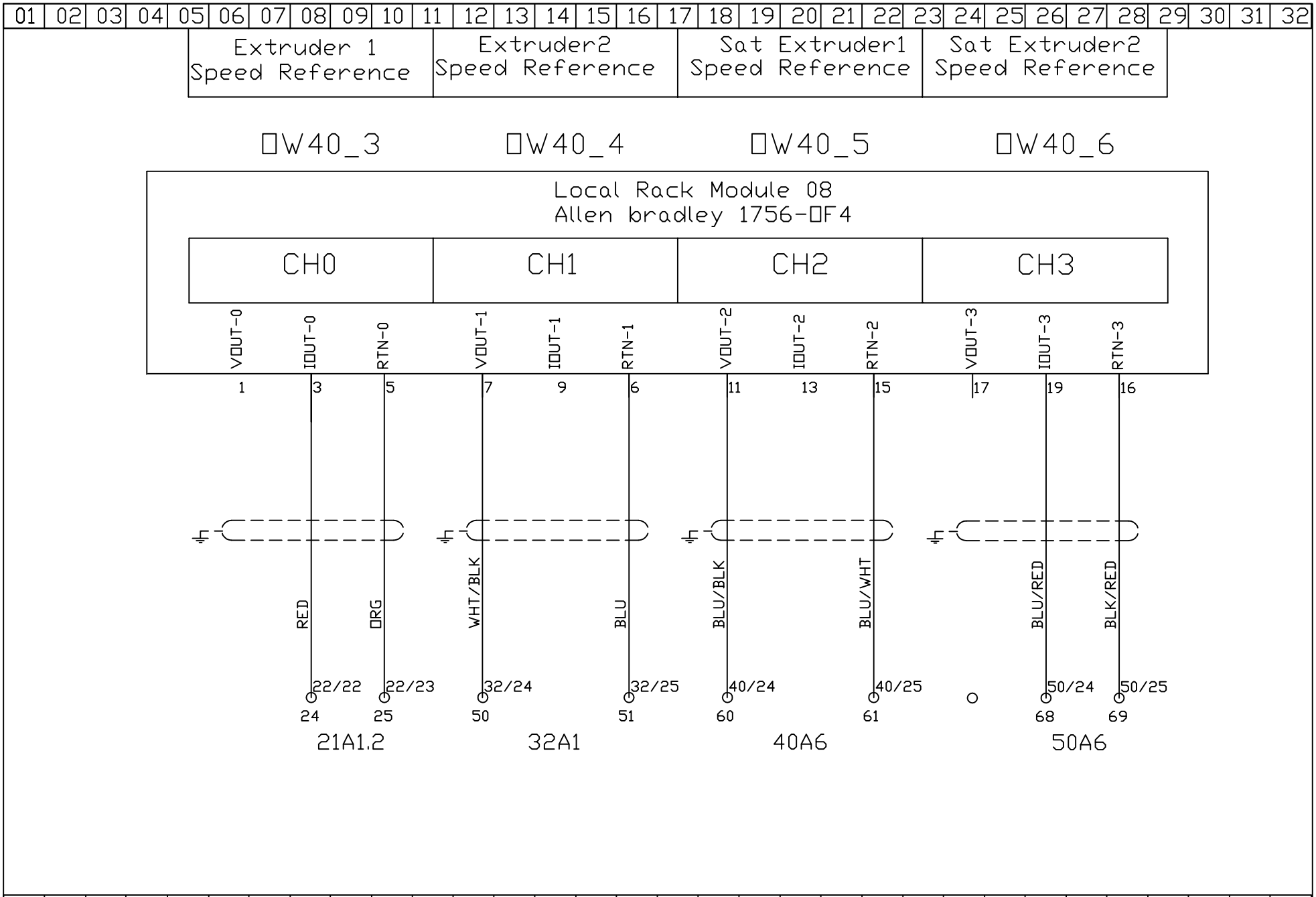

INTEPLAST GROUP, Ltd. AMTOPP DIVI. M/E DEPT.	Analog Output Card	DRAWING DESCRIPTION	Page #
DRAWN BY VINCENT HUANG		DRAWING NO.	Total 230
CHECKED BY		DRAWN DATE: 01-18-2011	MATERIAL
	REV. NO / REV. DESCRIPTION / REV. BY: / REV. DATE		SCALE NONE / UNIT MM

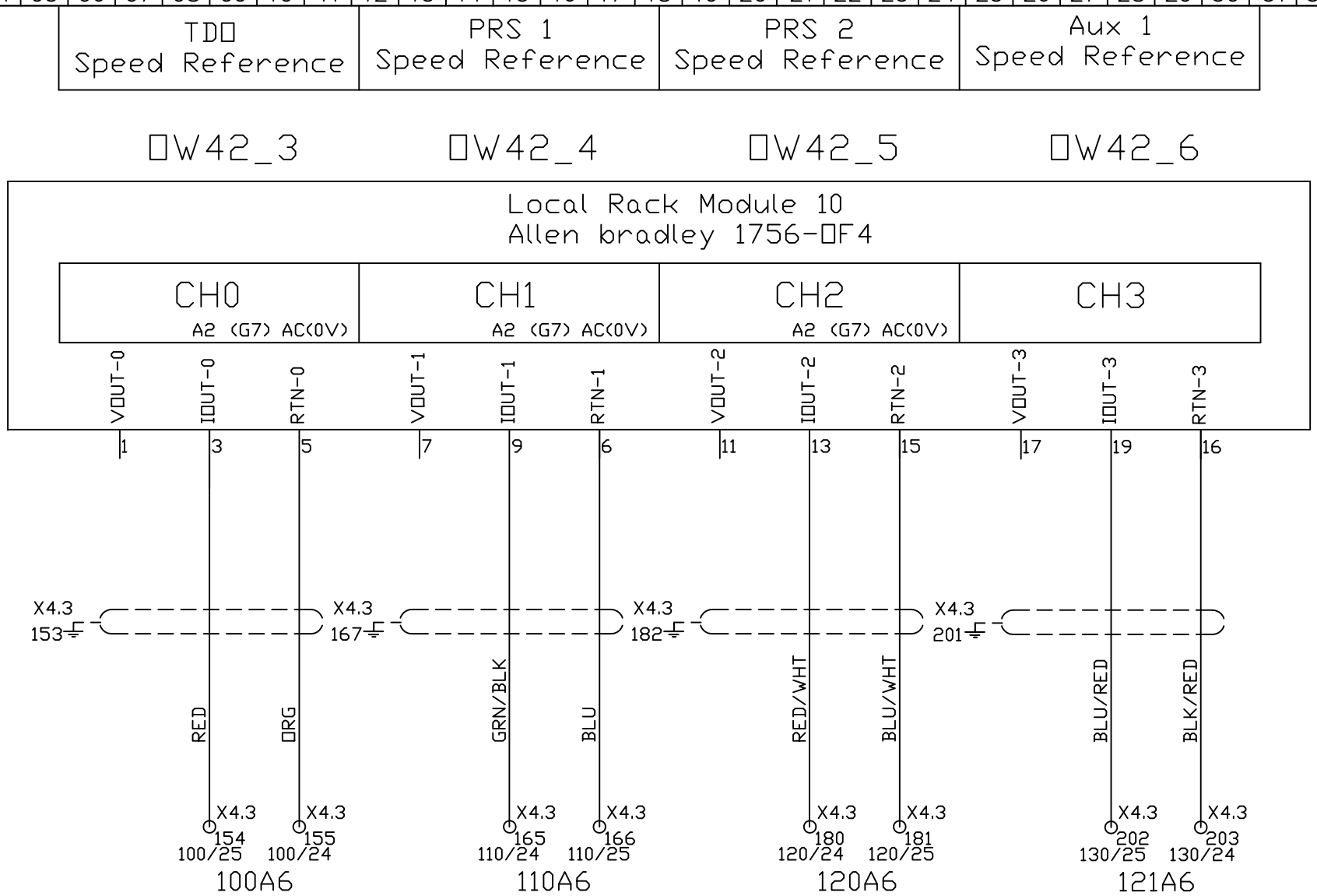

INTEPLAST GR□UP, Ltd. AMT□PP DIVI. M/E DEPT.	Analog □utput Card F□R G7 DRIVE	DRAWING DESCRIPTION	Page #
DRAWN BY VINCENT HUANG		DRAWING N□.	Total 232
CHECKED BY		DRAWN DATE: 01-26-2016	MATERIAL
	REV. N□ / REV. DESCRIPTION / REV. BY: / REV. DATE		SCALE N□NE / UNIT MM

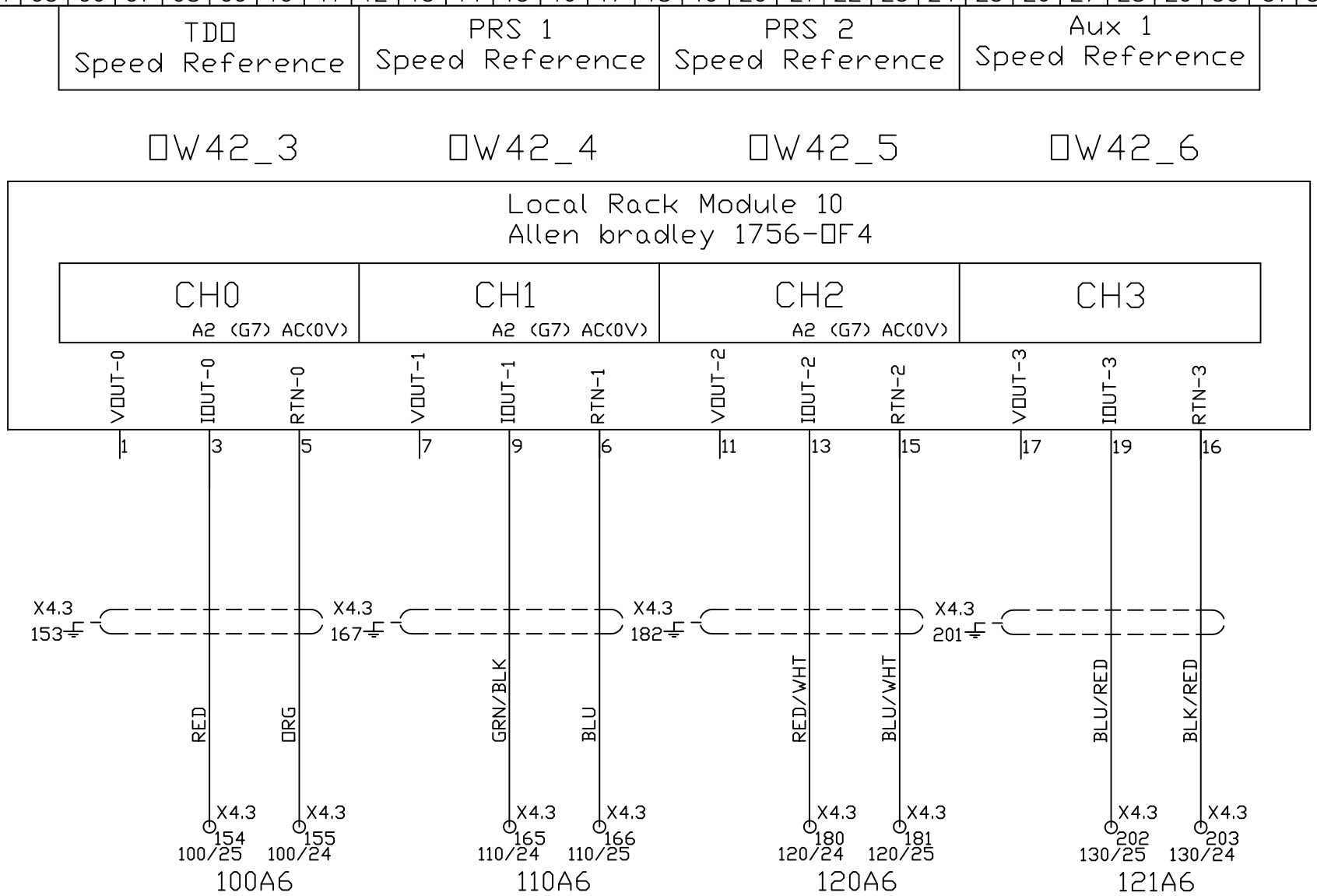

INTEPLAST GR□UP, Ltd. AMT□PP DIVI. M/E DEPT.	Analog □utput Card F□R G7 DRIVE	DRAWING DESCRIPTION	Page #
DRAWN BY VINCENT HUANG		DRAWING N□.	Total 232
CHECKED BY		DRAWN DATE: 01-26-2016	MATERIAL
	REV. N□ / REV. DESCRIPTION / REV. BY: / REV. DATE		SCALE N□NE / UNIT MM

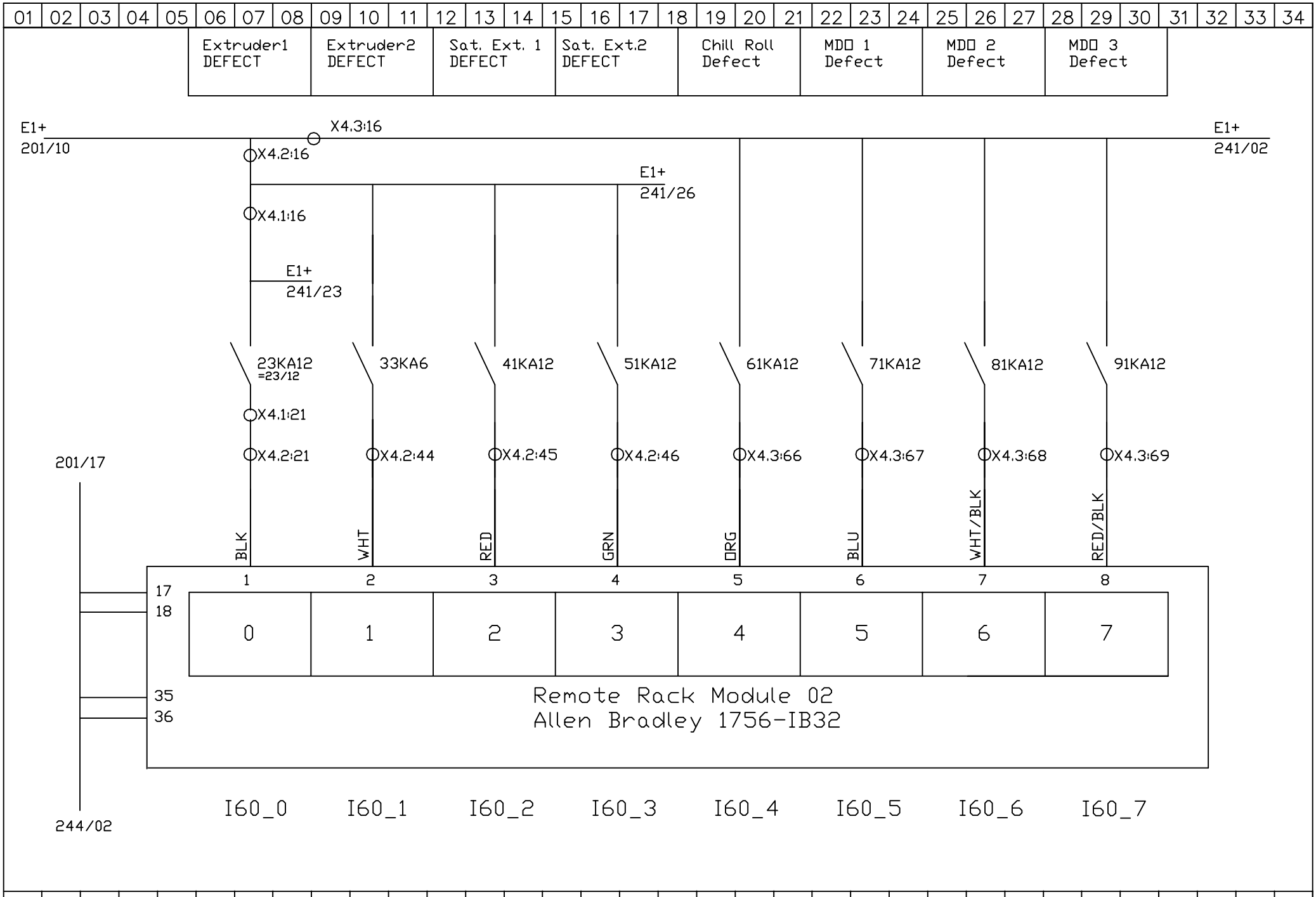

INTEPLAST GROUP, Ltd. AMTOPP DIVI. M/E DEPT.	AB-DIGITAL INPUT	DRAWING DESCRIPTION	F16
DRAWN BY VINCENT HUANG		DRAWING NO.	
CHECKED BY		DRAWN DATE: 03-19-2013	

REV. NO	REV. DESCRIPTION	REV. BY:	REV. DATE

Page #	240
Total	
MATERIAL	
SCALE	NONE
UNIT	MM

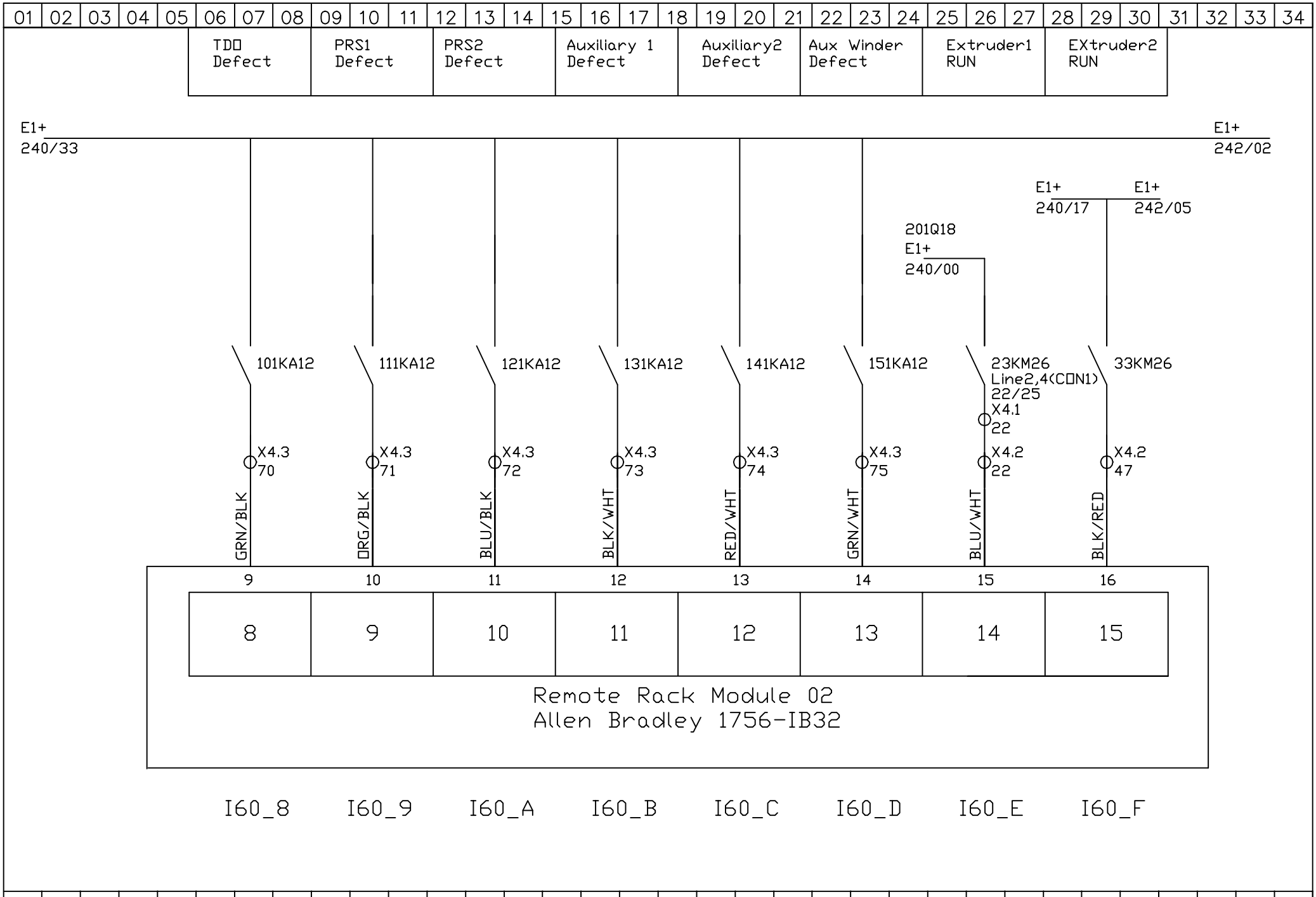

INTEPLAST GROUP, Ltd. AMTOPP DIVI. M/E DEPT.	AB-DIGITAL OUTPUT_TSR	DRAWING DESCRIPTION	F16
DRAWN BY VINCENT HUANG		DRAWING NO.	
CHECKED BY		DRAWN DATE: 11-18-2013	

REV. NO	REV. DESCRIPTION	REV. BY:	REV. DATE

Page #	241
Total	
MATERIAL	
SCALE	NONE
UNIT	MM

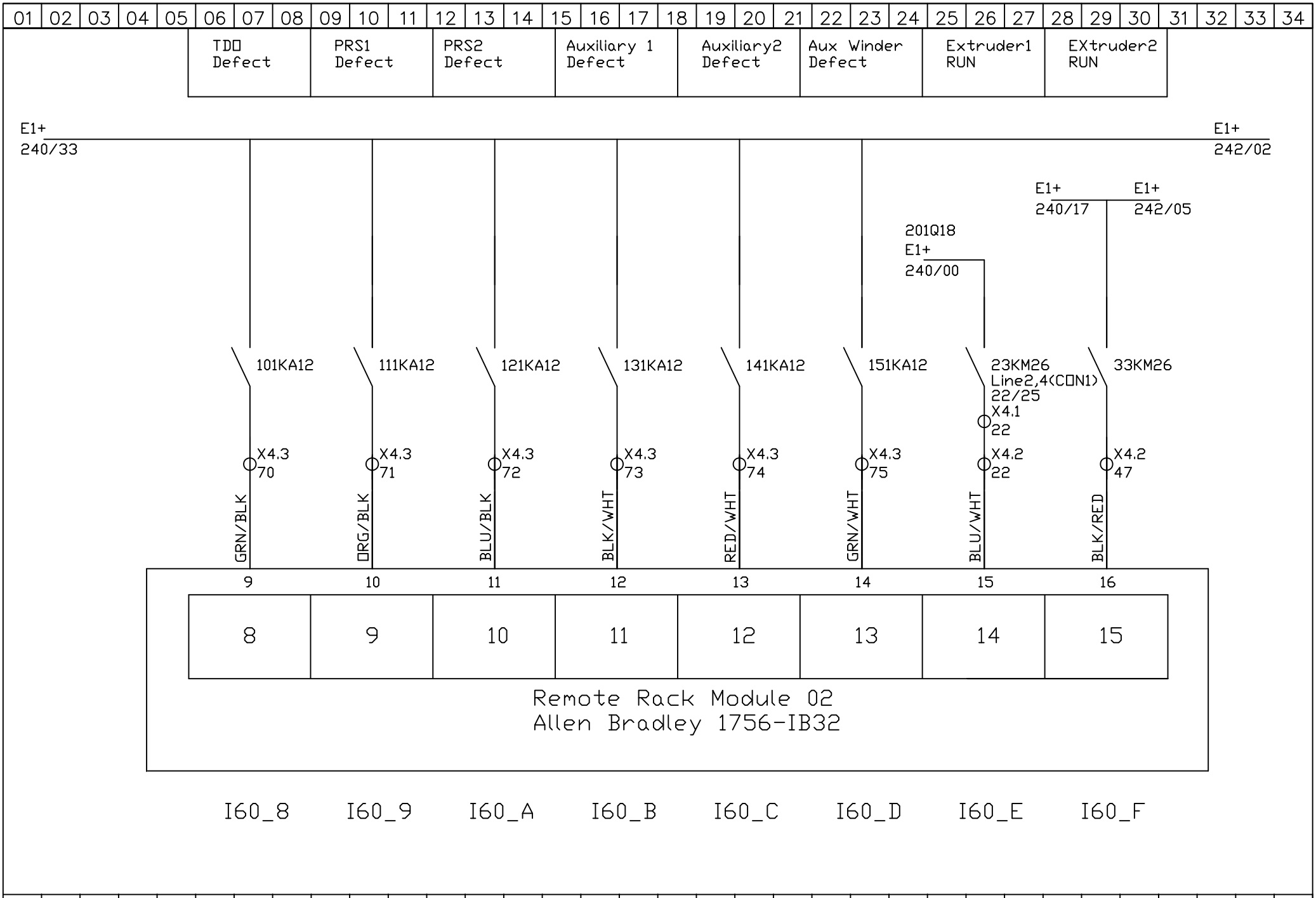

INTEPLAST GROUP, Ltd. AMTOPP DIVI. M/E DEPT.	AB-DIGITAL OUTPUT_TSR					DRAWING DESCRIPTION	F16	Page #			
								Total	241		
DRAWN BY VINCENT HUANG						DRAWING NO.		MATERIAL			
CHECKED BY		REV. NO	REV. DESCRIPTION	REV. BY:	REV. DATE	DRAWN DATE: 03-19-2013		SCALE	NONE	UNIT	MM

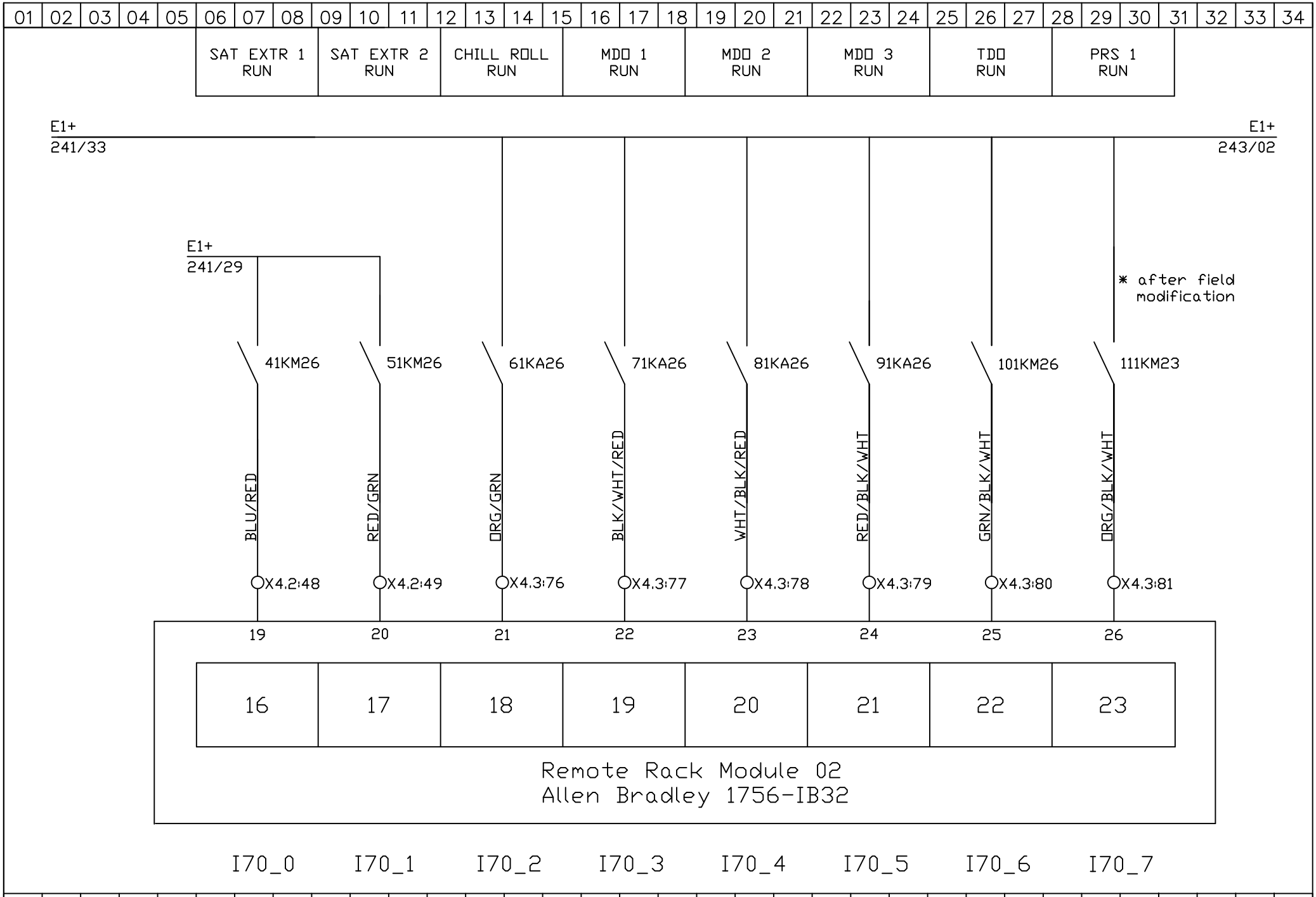
SAT EXTR 1 RUN
SAT EXTR 2 RUN
CHILL ROLL RUN
MDO 1 RUN
MDO 2 RUN
MDO 3 RUN
TDO RUN
PRS 1 RUN
E1+
241/33
E1+
243/02
E1+
241/29
* after field modification
41KM26
51KM26
61KA26
71KA26
81KA26
91KA26
101KM26
111KM23
BLU/RED
RED/GRN
ORG/GRN
BLK/WHT/RED
WHT/BLK/RED
RED/BLK/WHT
GRN/BLK/WHT
ORG/BLK/WHT
X4.2:48
X4.2:49
X4.3:76
X4.3:77
X4.3:78
X4.3:79
X4.3:80
X4.3:81
19
20
21
22
23
24
25
26
16
17
18
19
20
21
22
23
Remote Rack Module 02
Allen Bradley 1756-IB32
I70_0
I70_1
I70_2
I70_3
I70_4
I70_5
I70_6
I70_7

| | | |

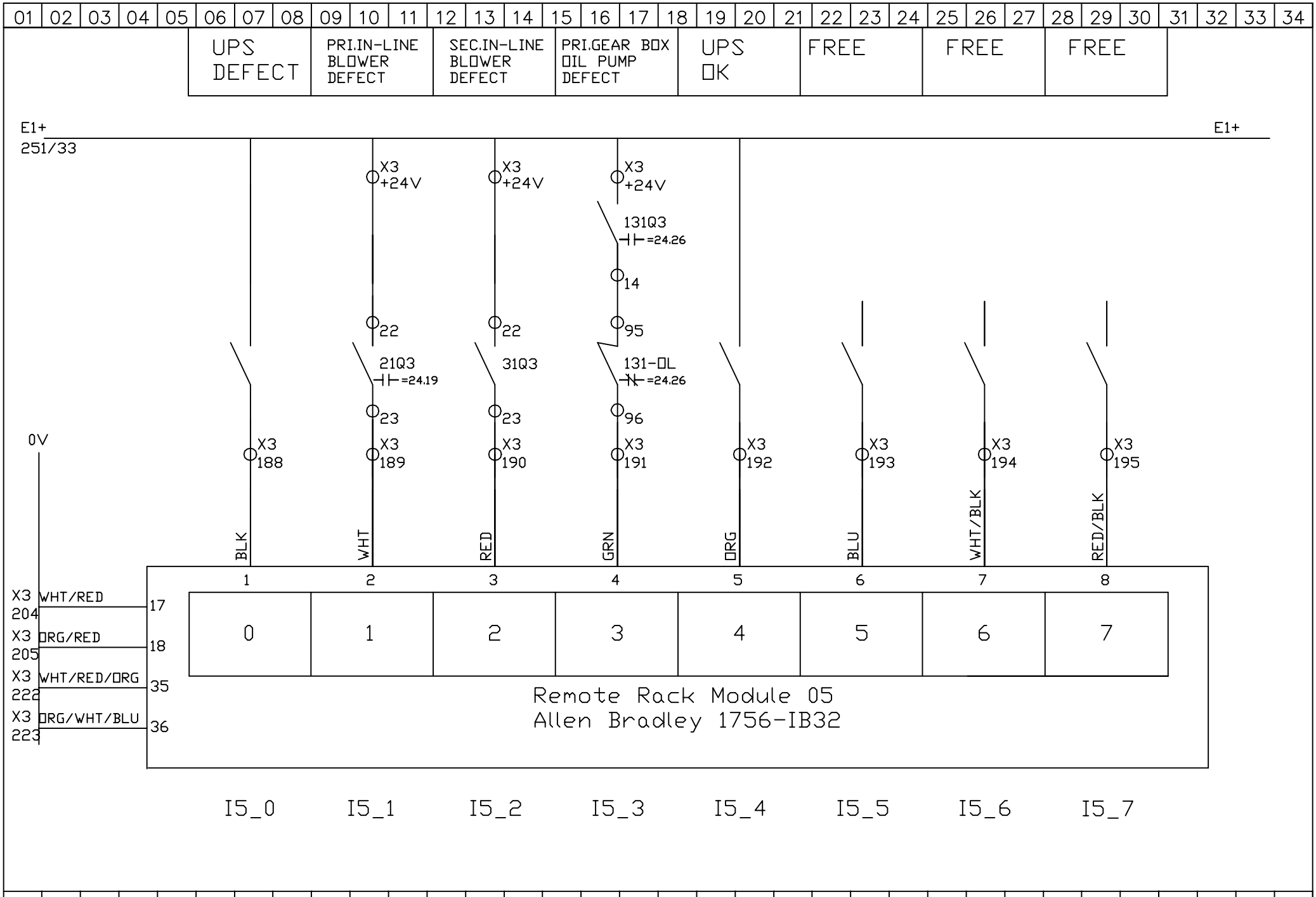

01	02	03	04	05	06	07	08	09	10	11	12	13	14	15	16	17	18	19	20	21	22	23	24	25	26	27	28	29	30	31	32	33	34

INTEPLAST GROUP, Ltd.
AMTOPP DIVI. M/E DEPT.

DRAWN BY VINCENT HUANG

CHECKED BY

AB-DIGITAL INPUT

REV. NO	REV. DESCRIPTION	REV. BY:	REV. DATE

DRAWING DESCRIPTION: F16

DRAWING NO.:

DRAWN DATE: 11-18-2013

Page # 252

Total

MATERIAL

SCALE NONE | UNIT MM

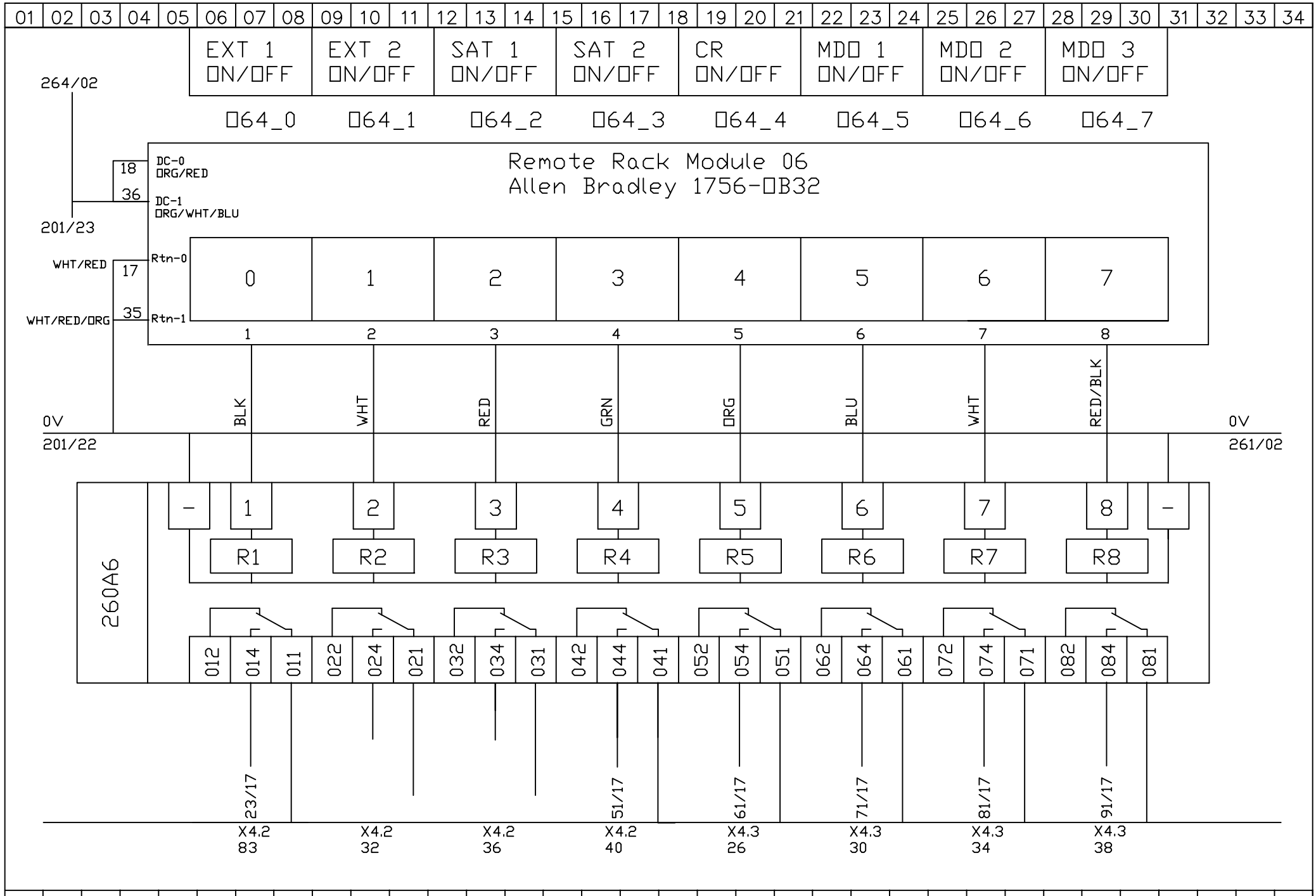

INTEPLAST GROUP, Ltd.
AMTOPP DIVI. M/E DEPT.

DRAWN BY VINCENT HUANG

CHECKED BY

AB-DIGITAL OUTPUT CARD

REV. NO	REV. DESCRIPTION	REV. BY	REV. DATE

DRAWING DESCRIPTION

DRAWING NO.

DRAWN DATE: 11-18-2013

Page # 260

Total

MATERIAL

SCALE NONE UNIT MM

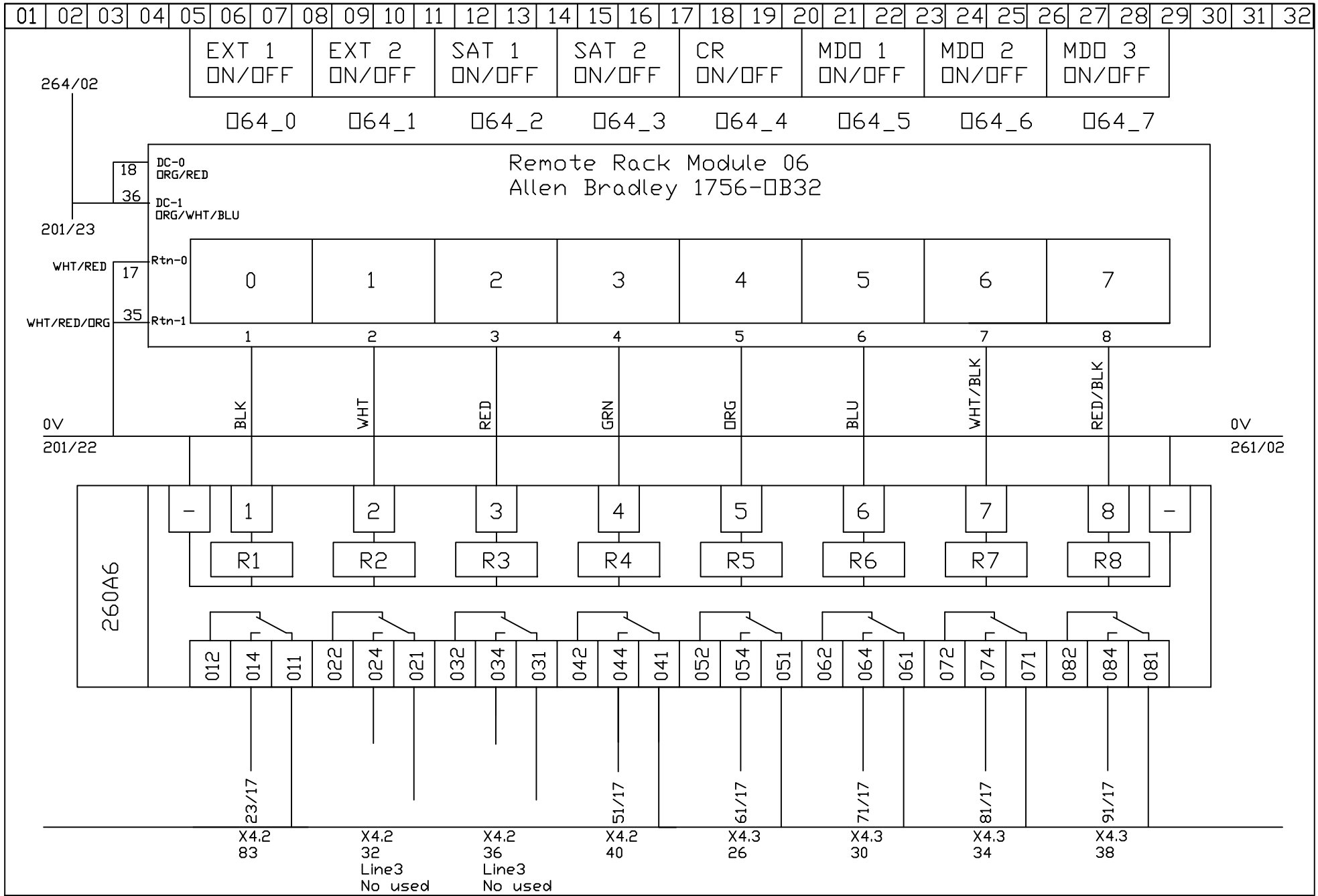

INTEPLAST GROUP, Ltd.
AMTOPP DIVI. M/E DEPT.

DRAWN BY VINCENT HUANG

CHECKED BY

AB-DIGITAL OUTPUT CARD

REV. NO	REV. DESCRIPTION	REV. BY:	REV. DATE

DRAWING DESCRIPTION

DRAWING NO.

DRAWN DATE: 01-18-2011

Page #

Total 260

MATERIAL

SCALE NONE UNIT MM

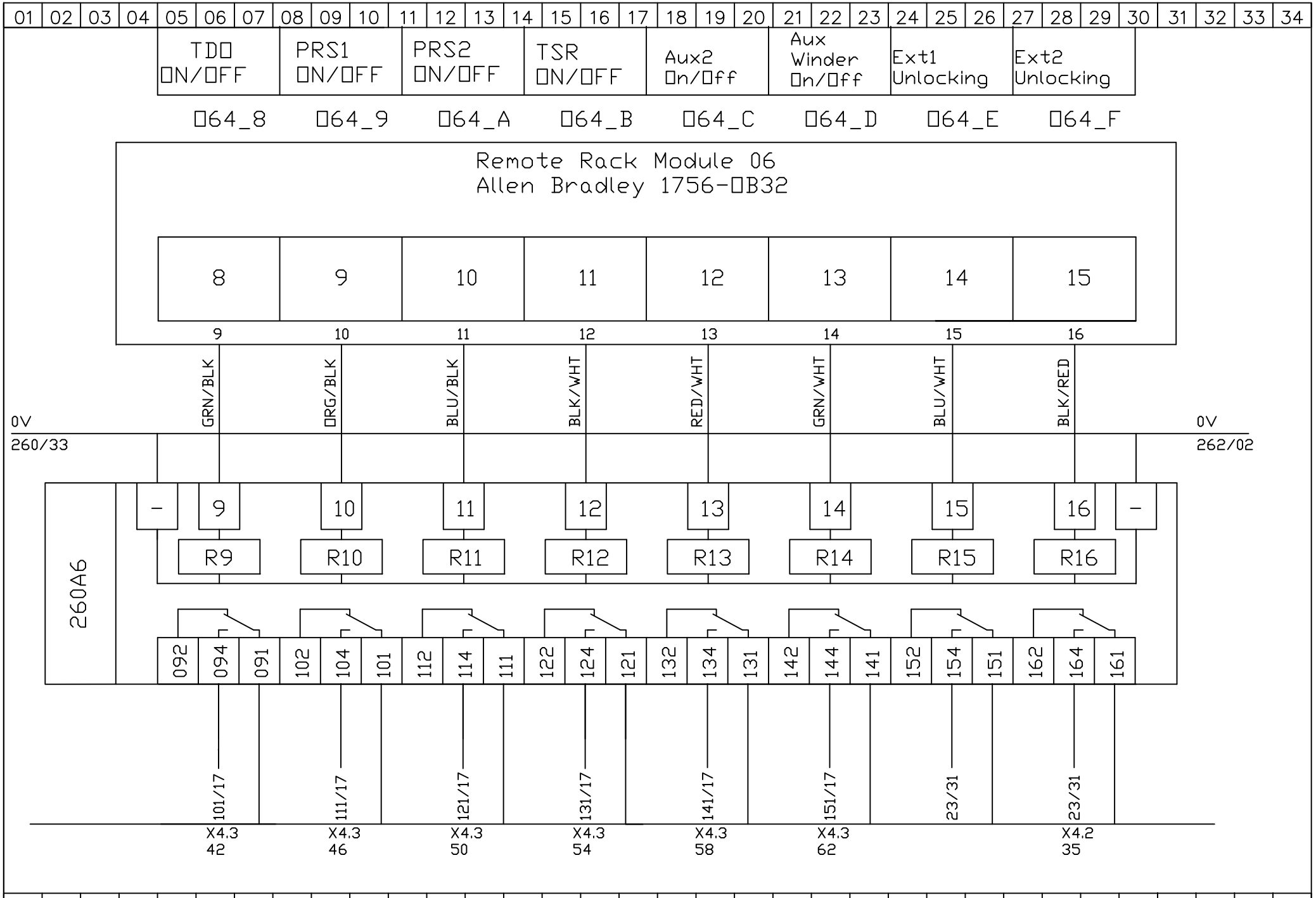

INTEPLAST GROUP, Ltd. AMTOPP DIVI. M/E DEPT.	AB-DIGITAL □UTPUT CARD				DRAWING DESCRIPTION	KF F16	Page #	261	
							Total		
DRAWN BY	JEFF LEE				DRAWING NO.		MATERIAL		
CHECKED BY	VINCENT HUANG	REV. NO	REV. DESCRIPTION	REV. BY:	REV. DATE	DRAWN DATE: 01-28-2014	SCALE	NONE	UNIT MM

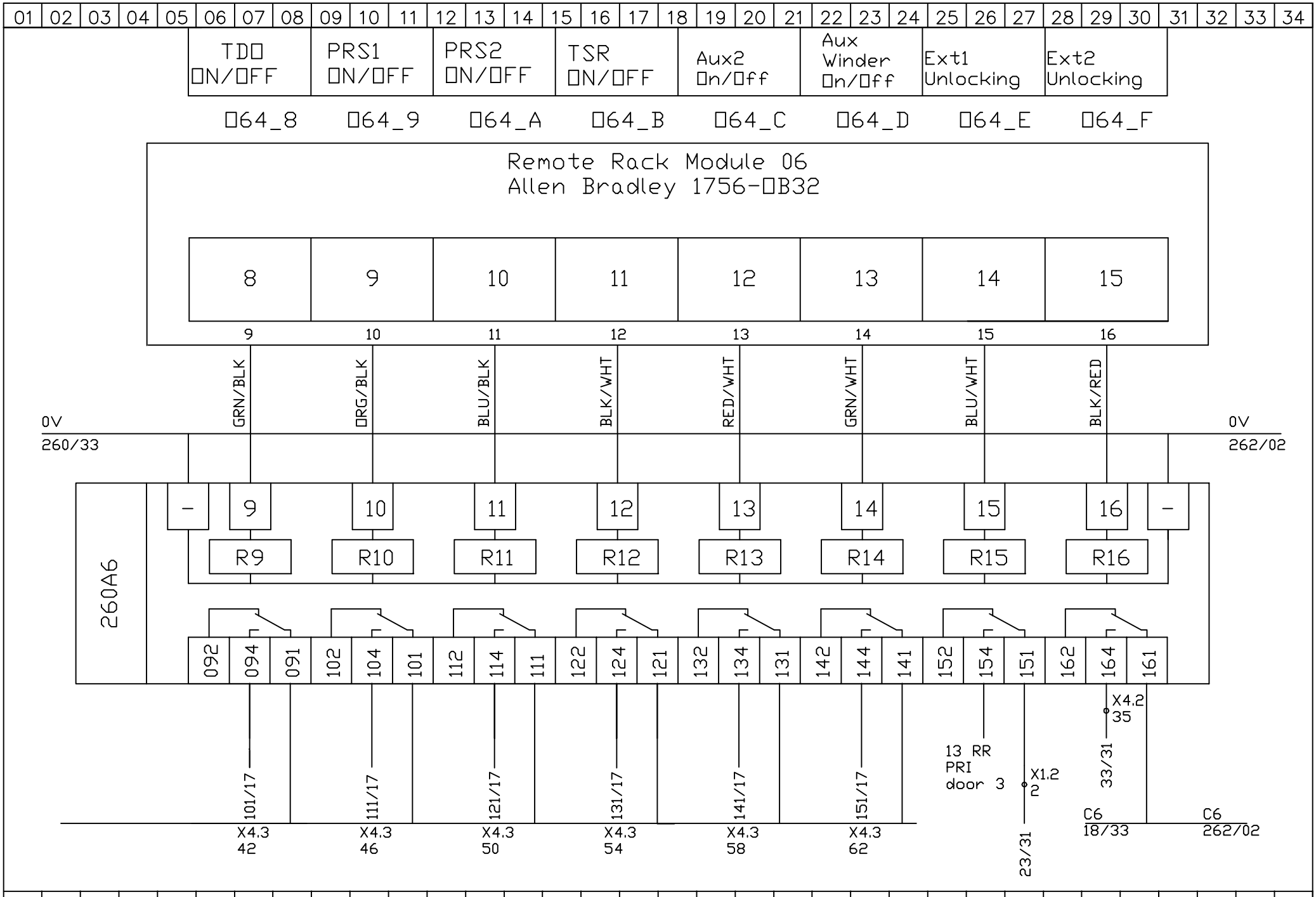

INTEPLAST GROUP, Ltd. AMTOPP DIVI. M/E DEPT.	AB-DIGITAL OUTPUT CARD	DRAWING DESCRIPTION	F16
DRAWN BY VINCENT HUANG		DRAWING NO.	
CHECKED BY		DRAWN DATE: 03-19-2013	

REV. NO	REV. DESCRIPTION	REV. BY:	REV. DATE

Page #	261
Total	
MATERIAL	
SCALE	NONE
UNIT	MM

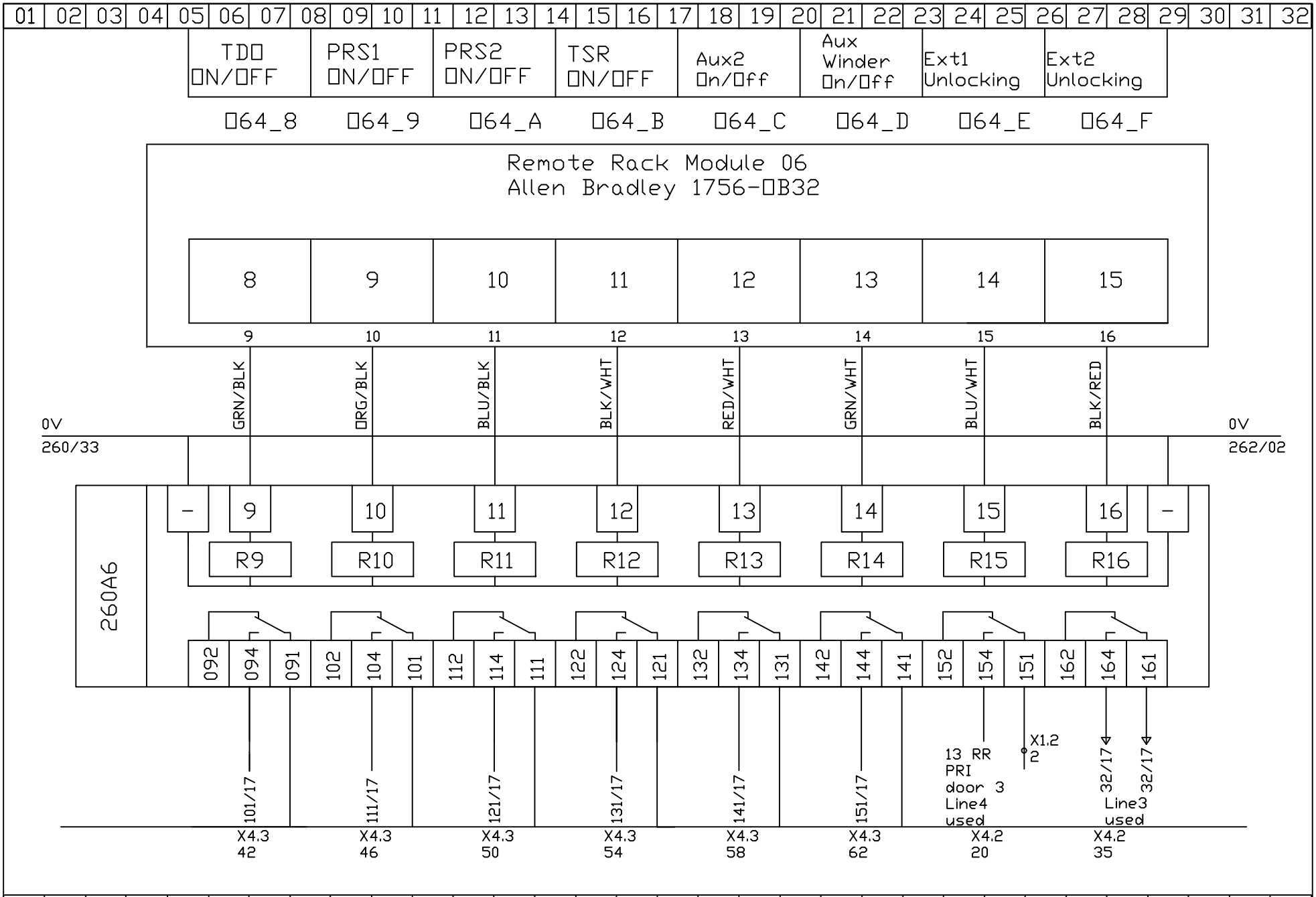

INTEPLAST GROUP, Ltd.
AMTOPP DIVI. M/E DEPT.

DRAWN BY VINCENT HUANG

CHECKED BY

AB-DIGITAL OUTPUT CARD

REV. NO	REV. DESCRIPTION	REV. BY:	REV. DATE

DRAWING DESCRIPTION

DRAWING NO.

DRAWN DATE: 05-04-2010

Page #

Total 261

MATERIAL

SCALE NONE UNIT MM

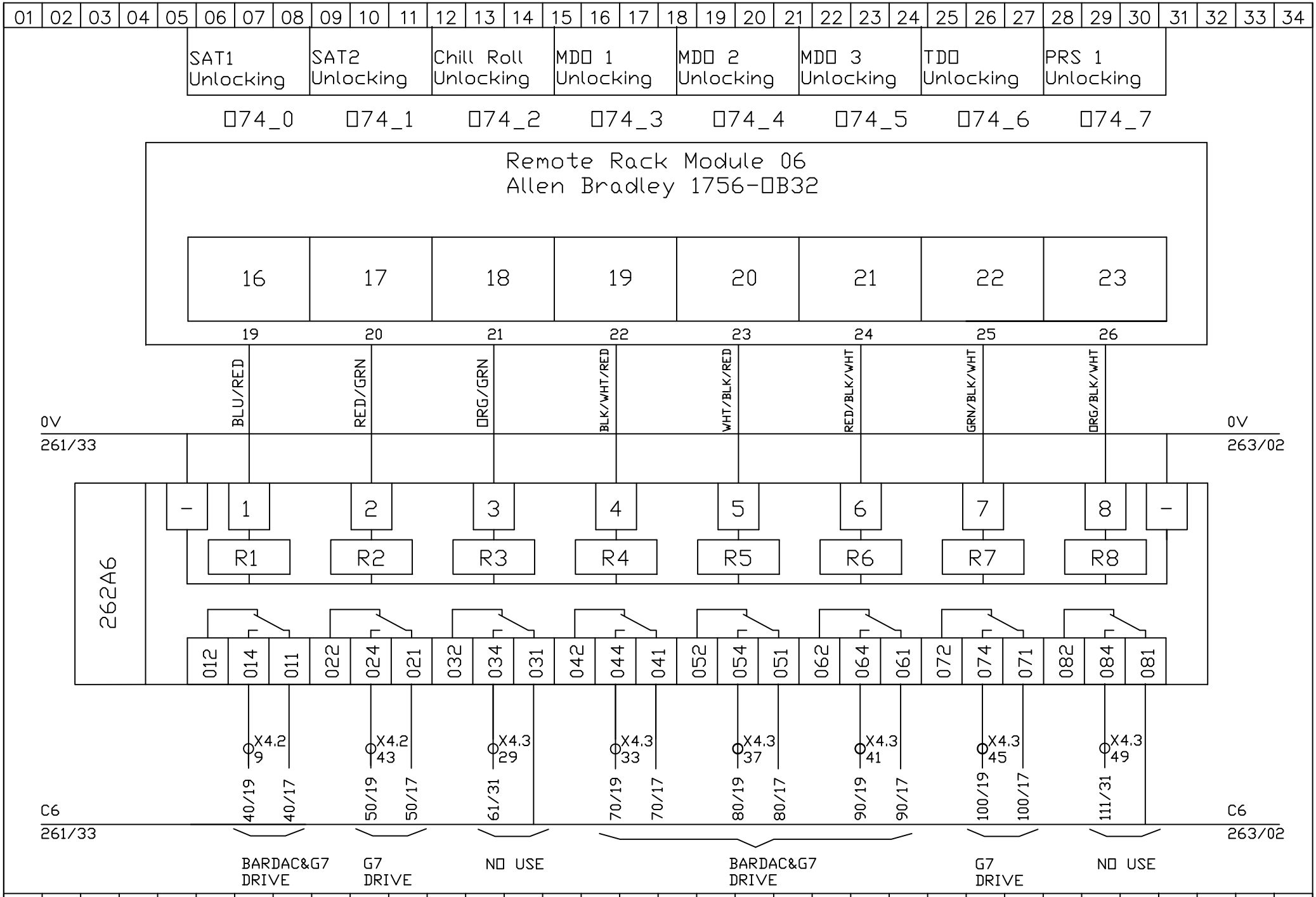

INTEPLAST GROUP, Ltd. AMTOPP DIVI. M/E DEPT.	AB-DIGITAL OUTPUT CARD			DRAWING DESCRIPTION	KF F16	Page #	262		
						Total			
DRAWN BY	JEFF LEE			DRAWING NO.		MATERIAL			
CHECKED BY	VINCENT HUANG	REV. NO	REV. DESCRIPTION	REV. BY:	REV. DATE	DRAWN DATE: 12-21-2015	SCALE	NONE	UNIT MM