LAYER-STACK

01-20

DRILL CHART: TOP TO BOTTOM

Sym	N°	Mils	MM	Qty	Plated
+	1	12	0.30	312	YES
×	2	22	0.55	2	NOT
◳	3	31	0.80	6	NOT
◇	4	40	1.02	44	YES

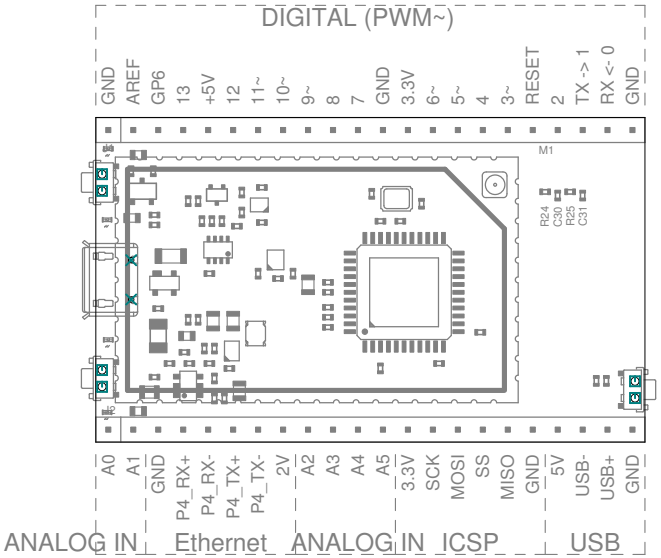

LINE WIDTH IMPEDANCE CHART FOR REFERENCE

Class	RF	Type	Coated Coplanar Waveguide With Ground 1B	
Layer	Impedance	Trace Width	Trace Separation	Ground Separation
TOP, BOTTOM	50 Ohms	26 mils	N/A	6 mils
Class	USB	Type	Diff Coated Coplanar Waveguide With Ground 1B	
Layer	Impedance	Trace Width	Trace Separation	Ground Separation
TOP, BOTTOM	90 Ohms	14.5 mils	6 mils	6 mils
Class	Ethernet	Type	Diff Coated Coplanar Waveguide With Ground 1B	
Layer	Impedance	Trace Width	Trace Separation	Ground Separation
TOP, BOTTOM	100 Ohms	10 mils	6 mils	6 mils

STACK-UP FOR REFERENCE

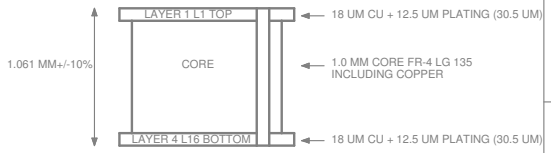

NOTES:

1. PRINTED CIRCUIT BOARD MADE FROM NEMA GRADE FR-4 TG 135 EPOXY LAMINATE WITH 18 UM COPPER PLATING AND 1 MM THICKNESS.
2. ALL DIMENSIONS ARE GIVEN IN MILLIMETERS EXCEPT TRACE WIDTH/SPACE.
3. CIRCUIT PATHS ARE FOR REFERENCE ONLY.
4. HOLE SIZES SHOWN ARE FINISHED DIAMETERS AFTER PLATING.
5. BOARD PLATED USING REFLOW OR SIMILAR METHOD.
6. BOARD TO HAVE WHITE SOLDER MASK ON PLATED SURFACES USING WET FILM SR100 OR SR1010 EPOXY.
EQUIVALENT WET OR DRY FILM MAY BE USED.
7. SILKSCREEN BOARD USING BLACK INK. DISTORTION OF SILKSCREEN IS ACCEPTABLE OVER TRACES. EPOXY INK ON PLATED LANDS IS NOT ACCEPTABLE
8. THE FOLLOWING INFORMATION APPLIES TO THIS BOARD:
   * 2 COPPER LAYERS
   * 1 MM BOARD THICKNESS
   * REQUIRES TOP AND BOTTOM SIDE SILKSCREENS

DOMINO Qi WIFI 4 THINGS

CC BY SA
CC-BY-SA

Licensed under a Creative Commons Attribution-Share-Alike Unported License.
See creativecommons.org/licenses/by-sa/4.0/

Reference designs are provided "AS IS" and "WITH ALL FAULTS". The Domino Team disclaims all other warranties express or implied, regarding this product, including but not limited to, any implied warranties of merchantibility or fitness for any particular application.

The Domino Team may make changes to specifications and product descriptions at any time, without notice.

© 2014-2015, The Domino Team.
All rights reserved.

Domino Qi Mini

not saved!

Pinout (.PIN)

Rev. A