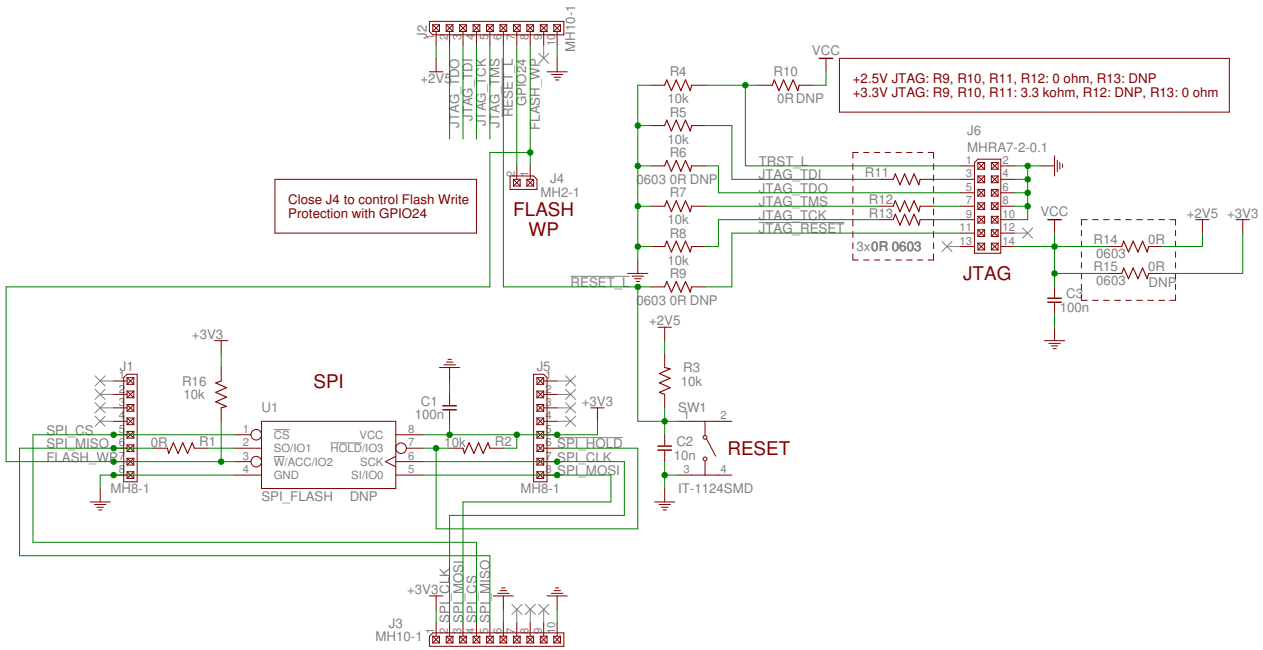

Resistors are 5% 1/16W 0402 unless otherwise specified
Ceramic capacitors are ±10% 50V X7R dielectric 0402 unless otherwise specified

DOMINO
WIFI 4 THINGS

CC-BY-SA

Licensed under a Creative Commons Attribution-Share-Alike Unported License.
See creativecommons.org/licenses/by-sa/4.0/

Reference designs are provided "AS IS" and "WITH ALL FAULTS". Global Marine Networks disclaims all other warranties express or implied, regarding this product, including but not limited to, any implied warranties of merchantibility or fitness for any particular application.

The Domino Team may make changes to specifications and product descriptions at any time, without notice.

© 2014, The Domino Team
All rights reserved.

Domino JTAG SPI

30/12/14 21:59

Sheet: 1/1

Rev.C