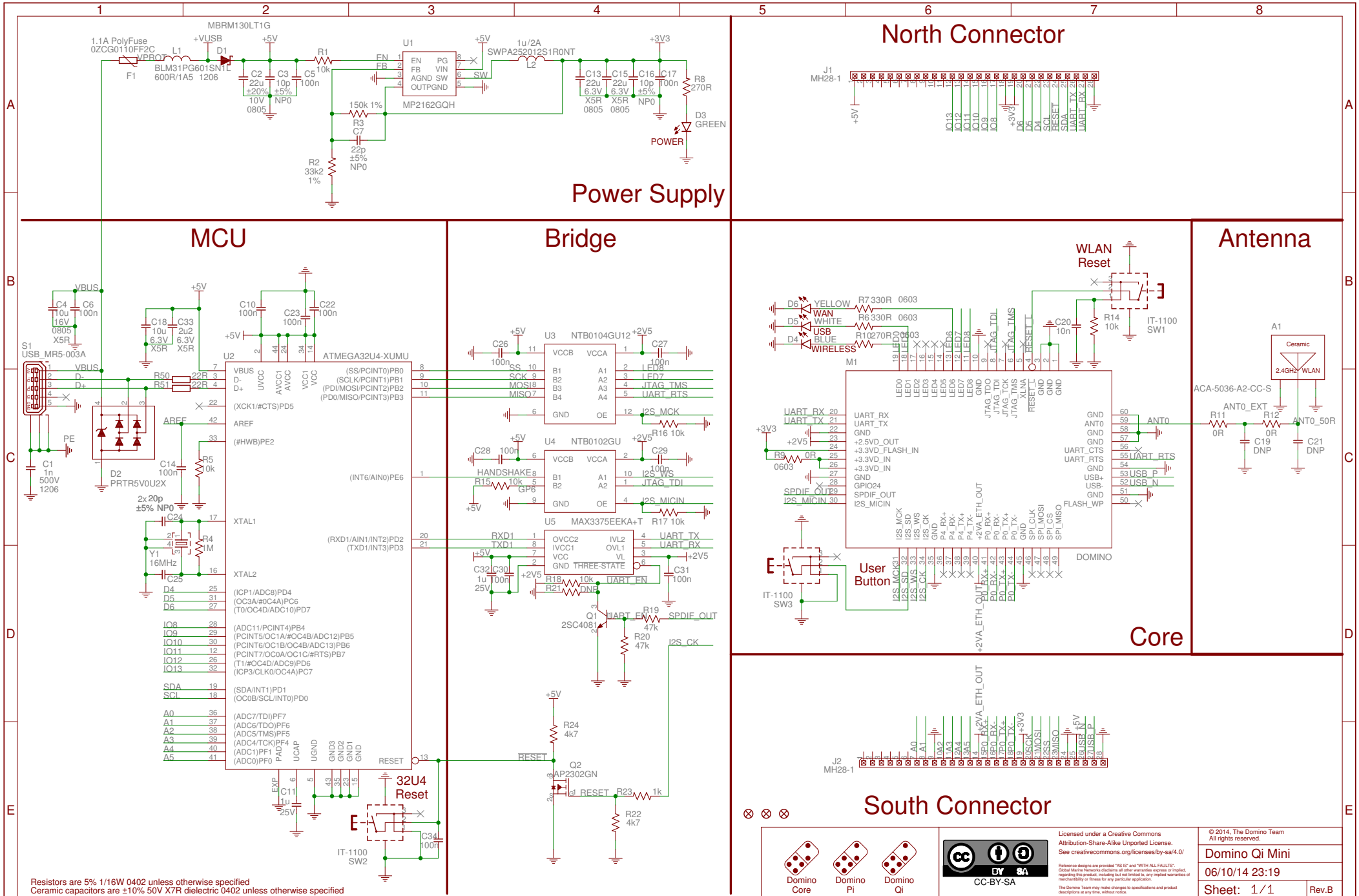
Power Supply
North Connector
MCU
Bridge
Core
Antenna
South Connector
MBRM130LT1G
1.1A PolyFuse
0ZCG0110FF2C
BLM31PG601SN1L
600R/1A5 1206
MP2162GQH
SWPA252012S1R0NT
1u/2A
POWER
ATMEGA32U4-XUMU
USB_MR5-003A
PRTR5V0U2X
16MHz
32U4
Reset
IT-1100
SW2
NTB0104GU12
NTB0102GU
MAX3375EEKA+T
2SC4081
AP2302GN
WLAN
Reset
YELLOW
WAN
WHITE
USB
BLUE
WIRELESS
User
Button
IT-1100
SW3
DOMINO
ACA-5036-A2-CC-S
Ceramic
2.4GHz WLAN
Resistors are 5% 1/16W 0402 unless otherwise specified
Ceramic capacitors are ±10% 50V X7R dielectric 0402 unless otherwise specified
Domino
Core
Domino
Pi
Domino
Qi
CC-BY-SA
Licensed under a Creative Commons
Attribution-Share-Alike Unported License.
See creativecommons.org/licenses/by-sa/4.0/
© 2014, The Domino Team
All rights reserved.
Domino Qi Mini
06/10/14 23:19
Sheet: 1/1
Rev.B