ESP32 MODULE

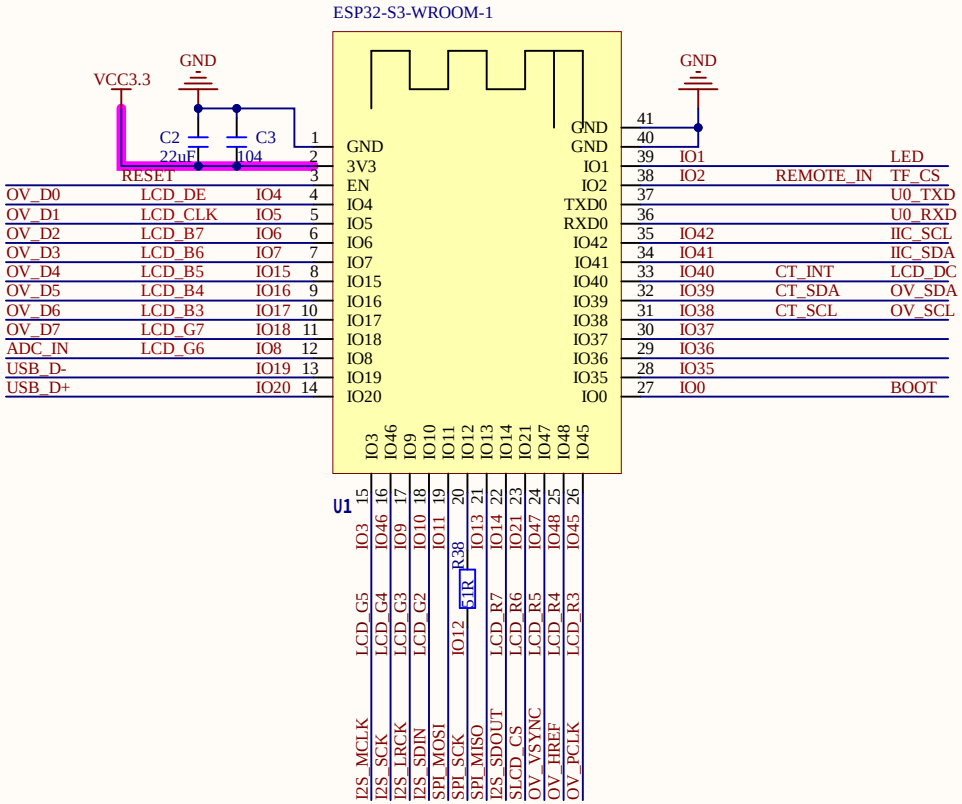

RESET

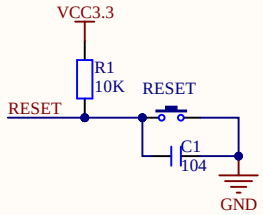

BOOT

IO_FUNC SELECT
SPI LCD SELECT

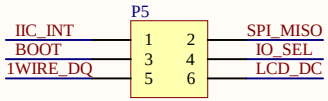

EX IO

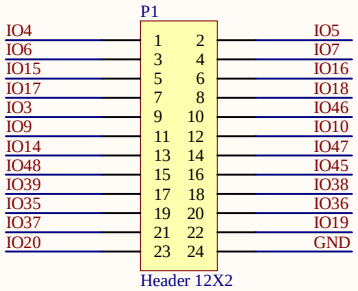

FD1 FD2 FD3 FD4
FD_mark

Title: ATK_DNESP32S3.PrjPcb	
Author: ALIENTEK	Size: A4
Date: 2024/3/28	File: CORE.SchDoc
Revision: 0	Version: V1.0

正点原子

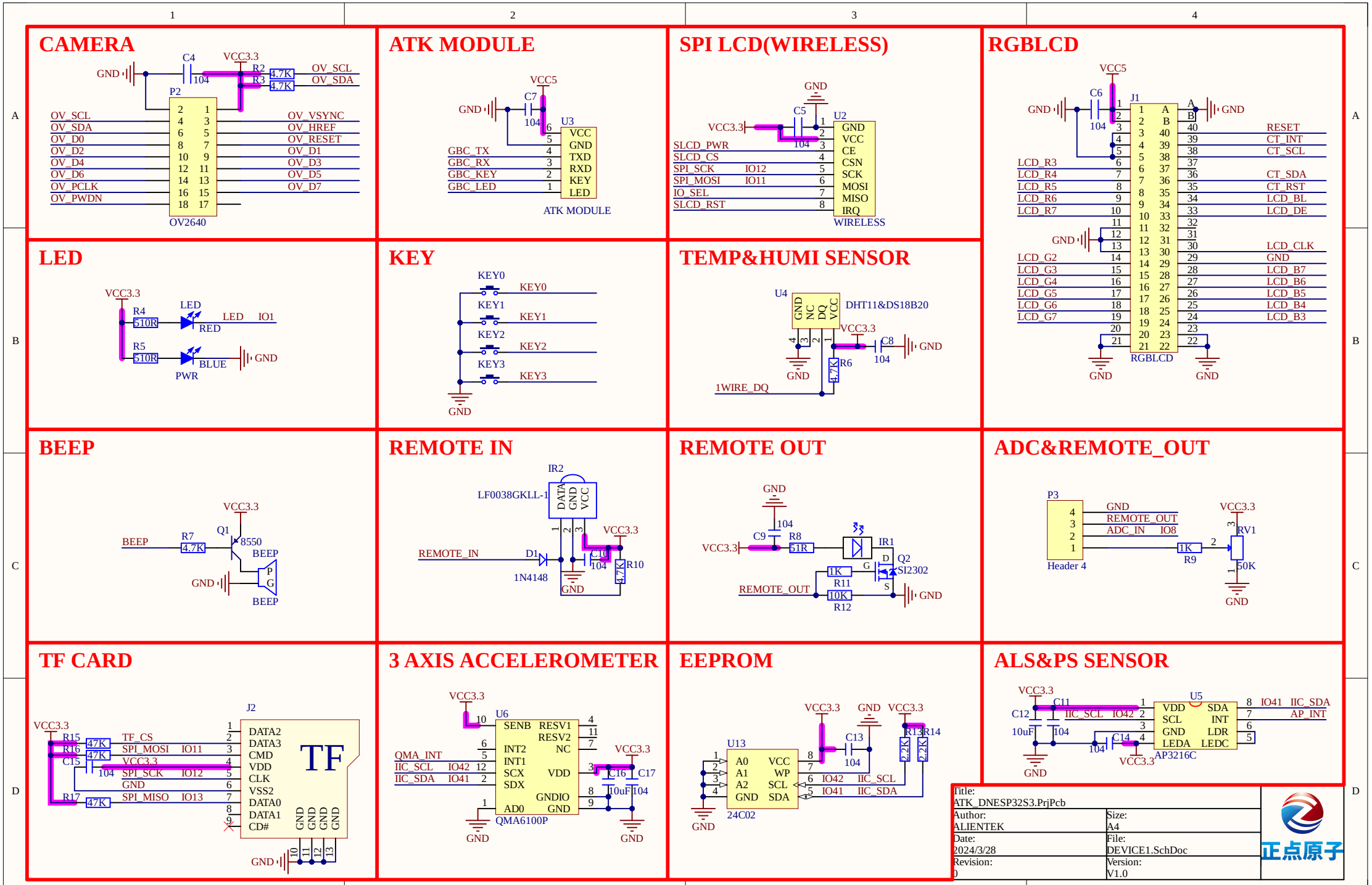
CAMERA
P2
OV2640
OV_SCL
OV_SDA
OV_D0
OV_D2
OV_D4
OV_D6
OV_PCLK
OV_PWDN
OV_VSYNC
OV_HREF
OV_RESET
OV_D1
OV_D3
OV_D5
OV_D7
ATK MODULE
U3
ATK MODULE
GBC_TX
GBC_RX
GBC_KEY
GBC_LED
SPI LCD(WIRELESS)
U2
WIRELESS
SLCD_PWR
SLCD_CS
SPI_SCK
SPI_MOSI
IO_SEL
SLCD_RST
RGBLCD
J1
RGBLCD
RESET
CT_INT
CT_SCL
CT_SDA
CT_RST
LCD_BL
LCD_DE
LCD_CLK
LCD_B7
LCD_B6
LCD_B5
LCD_B4
LCD_B3
LED
LED
RED
PWR
BLUE
KEY
KEY0
KEY1
KEY2
KEY3
TEMP&HUMI SENSOR
U4
DHT11&DS18B20
1WIRE_DQ
BEEP
Q1
8550
REMOTE IN
IR2
LF0038GKLL-1
REMOTE_IN
1N4148
REMOTE OUT
IR1
Q2
SI2302
REMOTE_OUT
ADC&REMOTE_OUT
P3
Header 4
RV1
50K
TF CARD
J2
TF
TF_CS
SPI_MOSI
SPI_SCK
SPI_MISO
3 AXIS ACCELEROMETER
U6
QMA6100P
QMA_INT
IIC_SCL
IIC_SDA
EEPROM
U13
24C02
ALS&PS SENSOR
U5
AP3216C
IIC_SCL
IIC_SDA
AP_INT
Title:
ATK_DNESP32S3.PrjPcb
Author:
ALIENTEK
Size:
A4
Date:
2024/3/28
File:
DEVICE1.SchDoc
Revision:
0
Version:
V1.0
正点原子

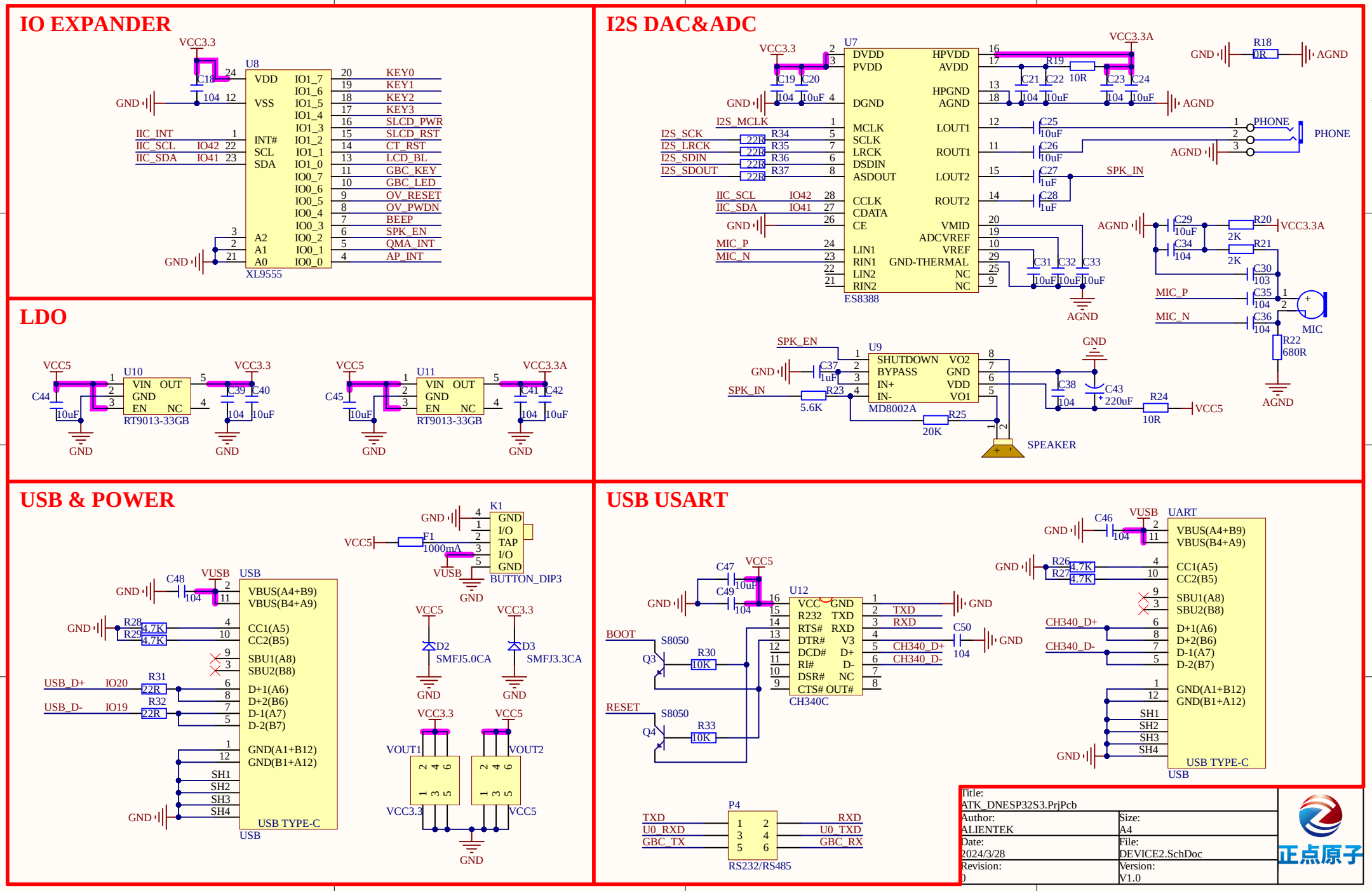
IO EXPANDER
U8
XL9555
VDD
VSS
INT#
SCL
SDA
A2
A1
A0
IO1_7
IO1_6
IO1_5
IO1_4
IO1_3
IO1_2
IO1_1
IO1_0
IO0_7
IO0_6
IO0_5
IO0_4
IO0_3
IO0_2
IO0_1
IO0_0
KEY0
KEY1
KEY2
KEY3
SLCD_PWR
SLCD_RST
CT_RST
LCD_BL
GBC_KEY
GBC_LED
OV_RESET
OV_PWDN
BEEP
SPK_EN
QMA_INT
AP_INT
IIC_INT
IIC_SCL
IIC_SDA
VCC3.3
GND
LDO
U10
U11
VIN
OUT
GND
EN
NC
RT9013-33GB
VCC5
VCC3.3
VCC3.3A
I2S DAC&ADC
U7
ES8388
DVDD
PVDD
DGND
MCLK
SCLK
LRCK
DSDIN
ASDOUT
CCLK
CDATA
CE
LIN1
RIN1
LIN2
RIN2
HPVDD
AVDD
HPGND
AGND
LOUT1
ROUT1
LOUT2
ROUT2
VMID
ADCVREF
VREF
GND-THERMAL
NC
I2S_MCLK
I2S_SCK
I2S_LRCK
I2S_SDIN
I2S_SDOUT
MIC_P
MIC_N
PHONE
SPK_IN
MIC
U9
MD8002A
SHUTDOWN
BYPASS
IN+
IN-
VO2
VDD
VO1
SPEAKER
USB & POWER
USB
USB TYPE-C
VBUS(A4+B9)
VBUS(B4+A9)
CC1(A5)
CC2(B5)
SBU1(A8)
SBU2(B8)
D+1(A6)
D+2(B6)
D-1(A7)
D-2(B7)
GND(A1+B12)
GND(B1+A12)
SH1
SH2
SH3
SH4
USB_D+
USB_D-
K1
BUTTON_DIP3
F1
1000mA
D2
SMFJ5.0CA
D3
SMFJ3.3CA
VOUT1
VOUT2
USB USART
U12
CH340C
VCC
R232
RTS#
DTR#
DCD#
RI#
DSR#
CTS#
TXD
RXD
V3
D+
D-
NC
OUT#
CH340_D+
CH340_D-
BOOT
RESET
S8050
Q3
Q4
P4
RS232/RS485
U0_RXD
GBC_TX
U0_TXD
GBC_RX
UART
VBUS(A4+B9)
VBUS(B4+A9)
CC1(A5)
CC2(B5)
SBU1(A8)
SBU2(B8)
D+1(A6)
D+2(B6)
D-1(A7)
D-2(B7)
GND(A1+B12)
GND(B1+A12)
SH1
SH2
SH3
SH4
USB TYPE-C
Title:
ATK_DNESP32S3.PrjPcb
Author:
ALIENTEK
Size:
A4
Date:
2024/3/28
File:
DEVICE2.SchDoc
Revision:
0
Version:
V1.0
正点原子

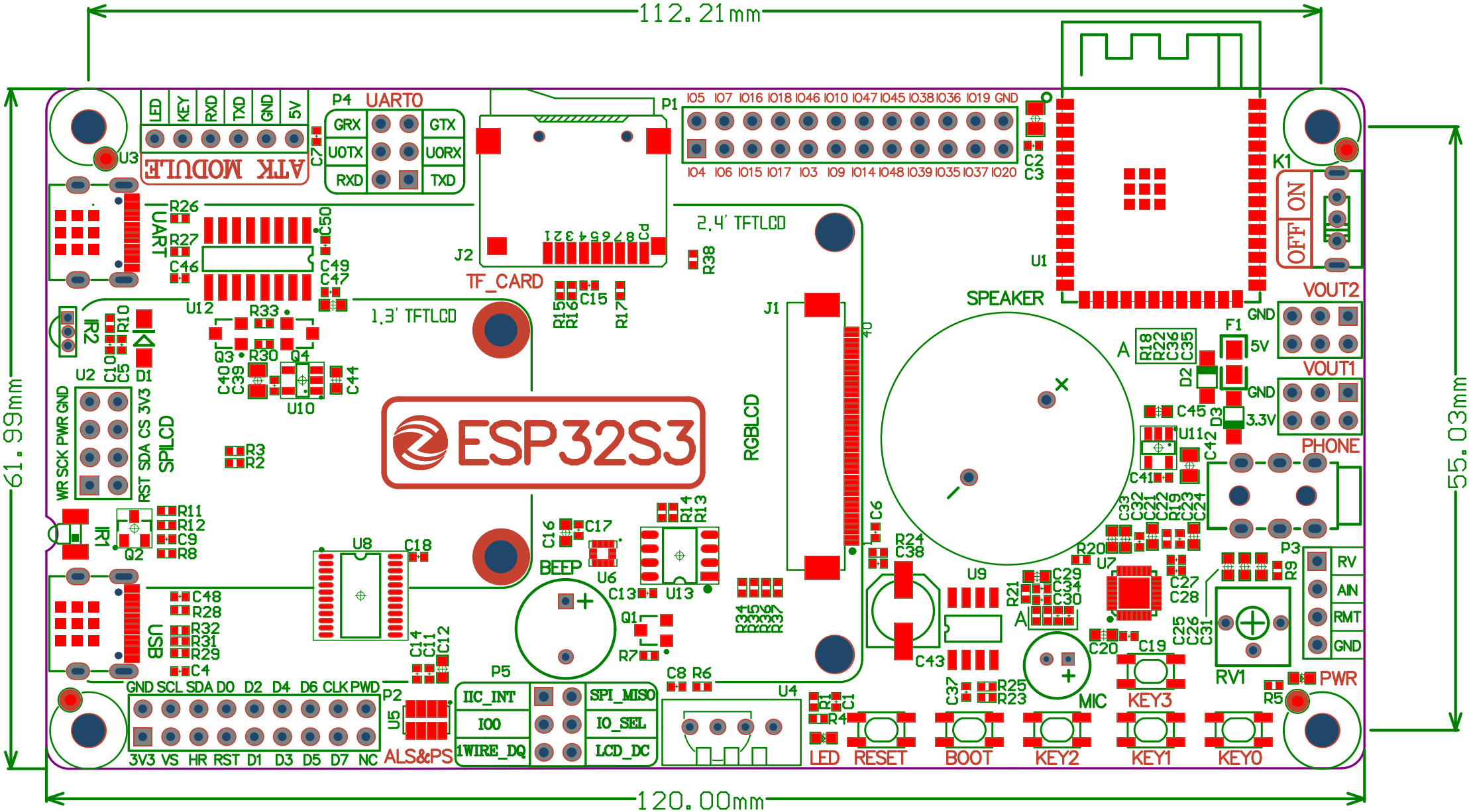
112.21mm
61.99mm
55.03mm
120.00mm
ATK MODULE
LED KEY RXD TXD GND 5V
P4 UART0
GRX GTX
U0TX U0RX
RXD TXD
P1
IO5 IO7 IO16 IO18 IO46 IO10 IO47 IO45 IO38 IO36 IO19 GND
IO4 IO6 IO15 IO17 IO3 IO9 IO14 IO48 IO39 IO35 IO37 IO20
U1
K1
ON
OFF
VOUT2
VOUT1
GND
5V
3.3V
F1
D2
D3
SPEAKER
2.4' TFTLCD
1.3' TFTLCD
TF_CARD
J2
J1
RGBLCD
ESP32S3
UART
SPILCD
WR SCK PWR GND
RST SDA CS 3V3
USB
GND SCL SDA D0 D2 D4 D6 CLK PWD
3V3 VS HR RST D1 D3 D5 D7 NC
P2
ALS&PS
P5
IIC_INT
IO0
1WIRE_DQ
SPI_MISO
IO_SEL
LCD_DC
BEEP
U4
LED
RESET
BOOT
KEY2
KEY1
KEY0
KEY3
MIC
PHONE
P3
RV
AIN
RMT
GND
RV1
PWR
A
U2
U3
U8
U9
U10
U11
U12
U13
U5
U6
U7
Q1
Q2
Q3
Q4
D1
IR1
IR2

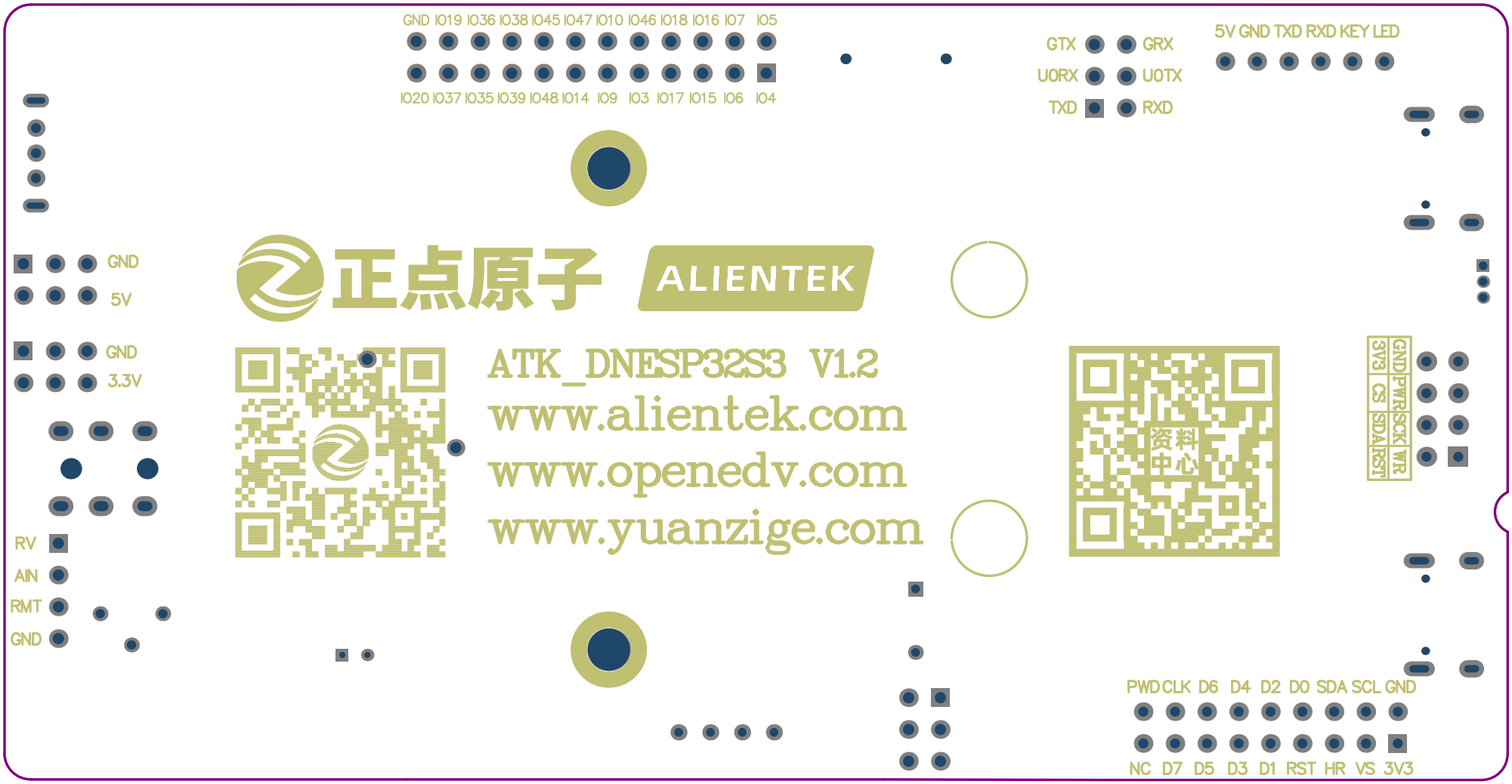
GND IO19 IO36 IO38 IO45 IO47 IO10 IO46 IO18 IO16 IO7 IO5
IO20 IO37 IO35 IO39 IO48 IO14 IO9 IO3 IO17 IO15 IO6 IO4
GTX GRX
U0RX U0TX
TXD RXD
5V GND TXD RXD KEY LED
GND
5V
GND
3.3V
正点原子 ALIENTEK
ATK_DNESP32S3 V1.2
www.alientek.com
www.openedv.com
www.yuanzige.com
资料中心
GND PWR SCK WR
3V3 CS SDA RST
RV
AIN
RMT
GND
PWD CLK D6 D4 D2 D0 SDA SCL GND
NC D7 D5 D3 D1 RST HR VS 3V3