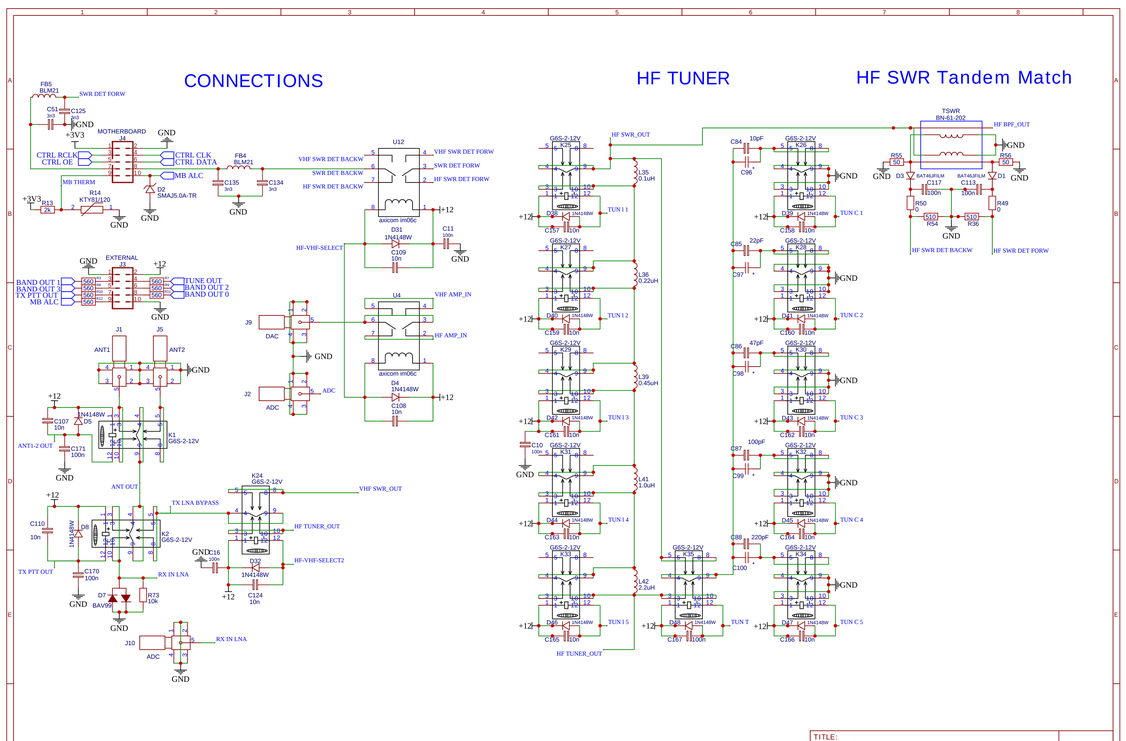
CONNECTIONS
HF TUNER
HF SWR Tandem Match
MOTHERBOARD
EXTERNAL
TUNER
TSWR BN-61-202
TITLE: Connections, HF-Tuner, HF-SWR
REV: 5.4
Company: UA3REO, RU4PN
Sheet: 1/6
Date: 2022-03-31
Drawn By:

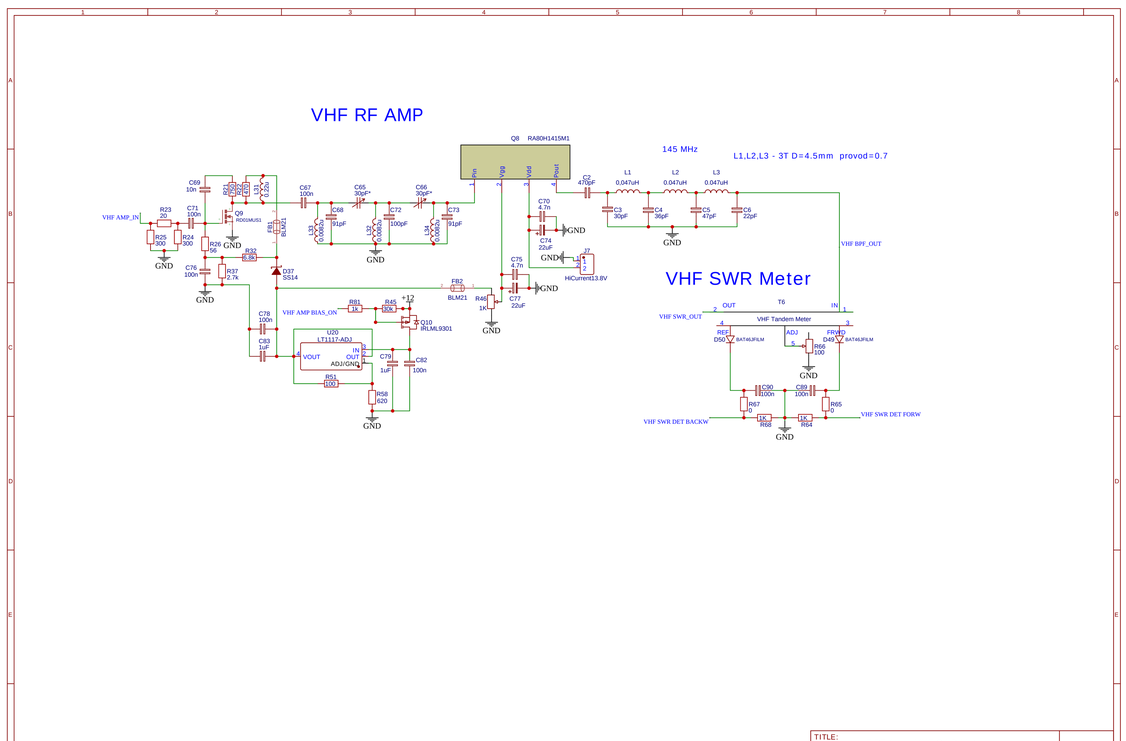
VHF RF AMP
VHF SWR Meter
145 MHz
L1,L2,L3 - 3T D=4.5mm provod=0.7
VHF Tandem Meter
TITLE: VHF RF Amp, VHF SWR Meter
REV: 5.4
Company: UA3REO, RU4PN
Sheet: 2/6
Date: 2022-03-31

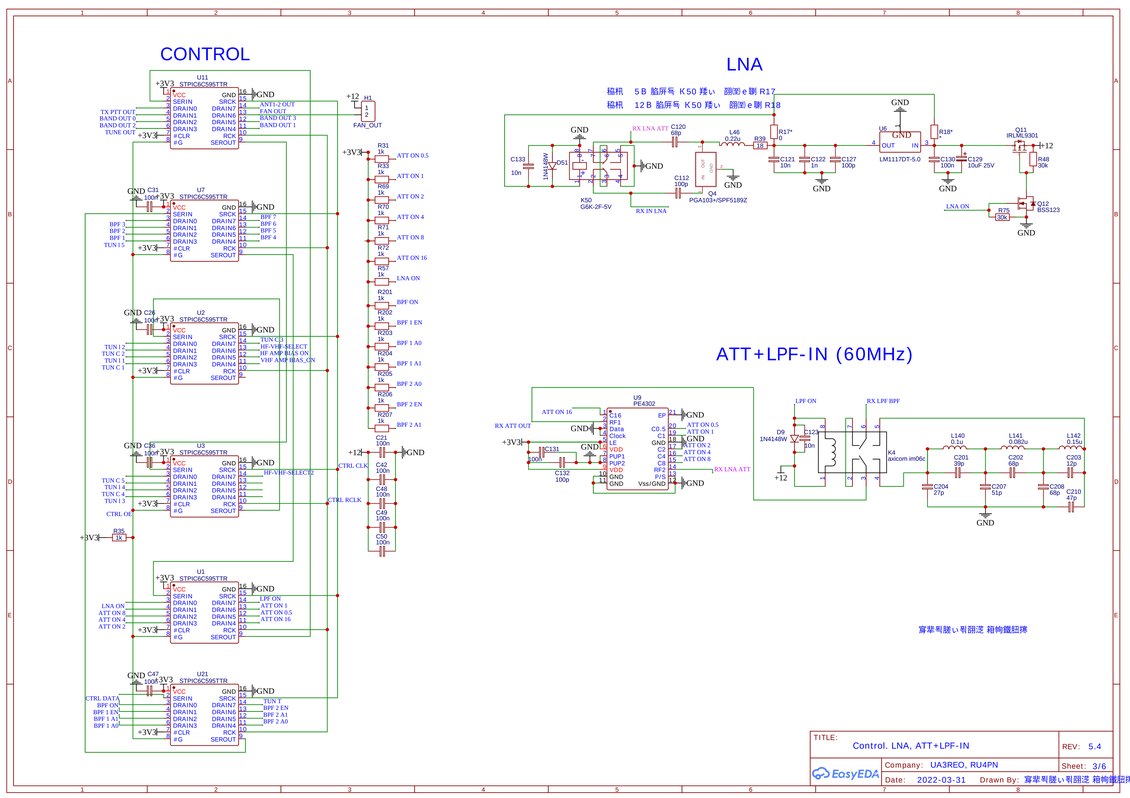
CONTROL
LNA
ATT+LPF-IN (60MHz)
TITLE: Control. LNA, ATT+LPF-IN
REV: 5.4
Company: UA3REO, RU4PN
Sheet: 3/6
Date: 2022-03-31

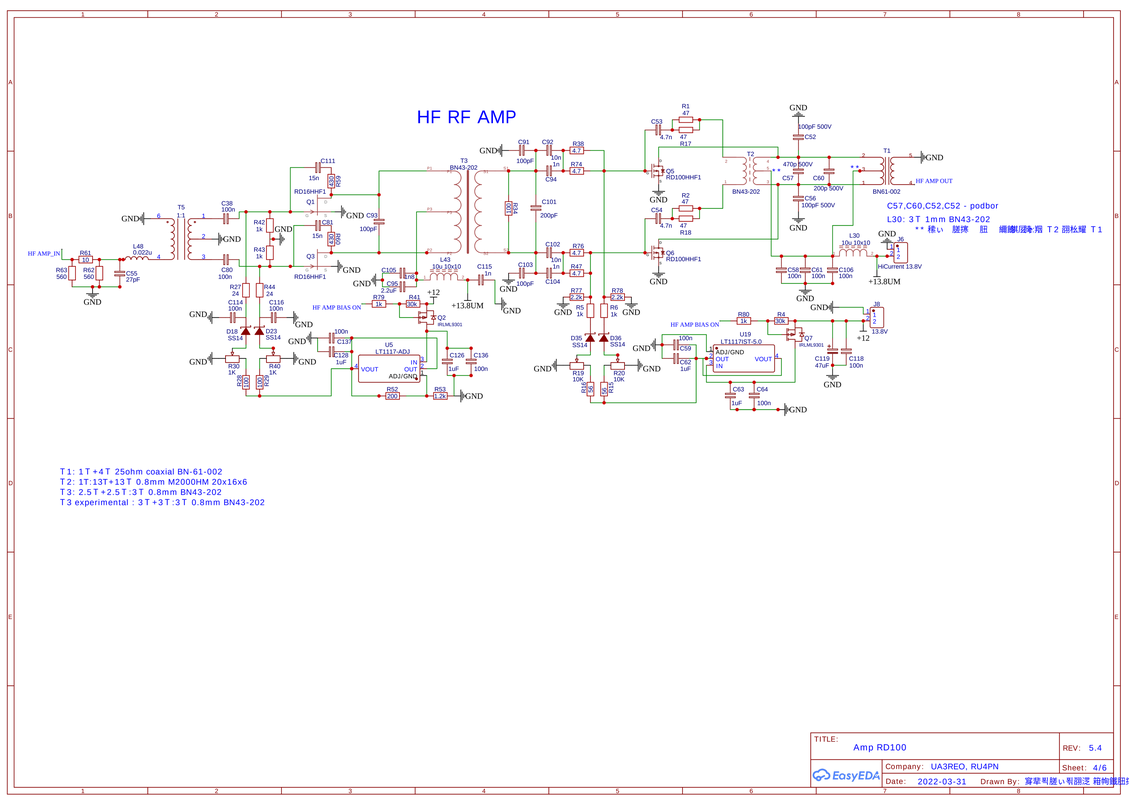
HF RF AMP
C57,C60,C52,C52 - podbor
L30: 3T 1mm BN43-202
T1: 1T+4T 25ohm coaxial BN-61-002
T2: 1T:1T+1:1T 0.8mm M20000HM 20x16x6
T3: 2.5T+2.5T:3T 0.8mm BN43-202
T3 experimental : 3T+3T:3T 0.8mm BN43-202
TITLE: Amp RD100
REV: 5.4
Company: UA3REO, RU4PN
Sheet: 4/6
Date: 2022-03-31

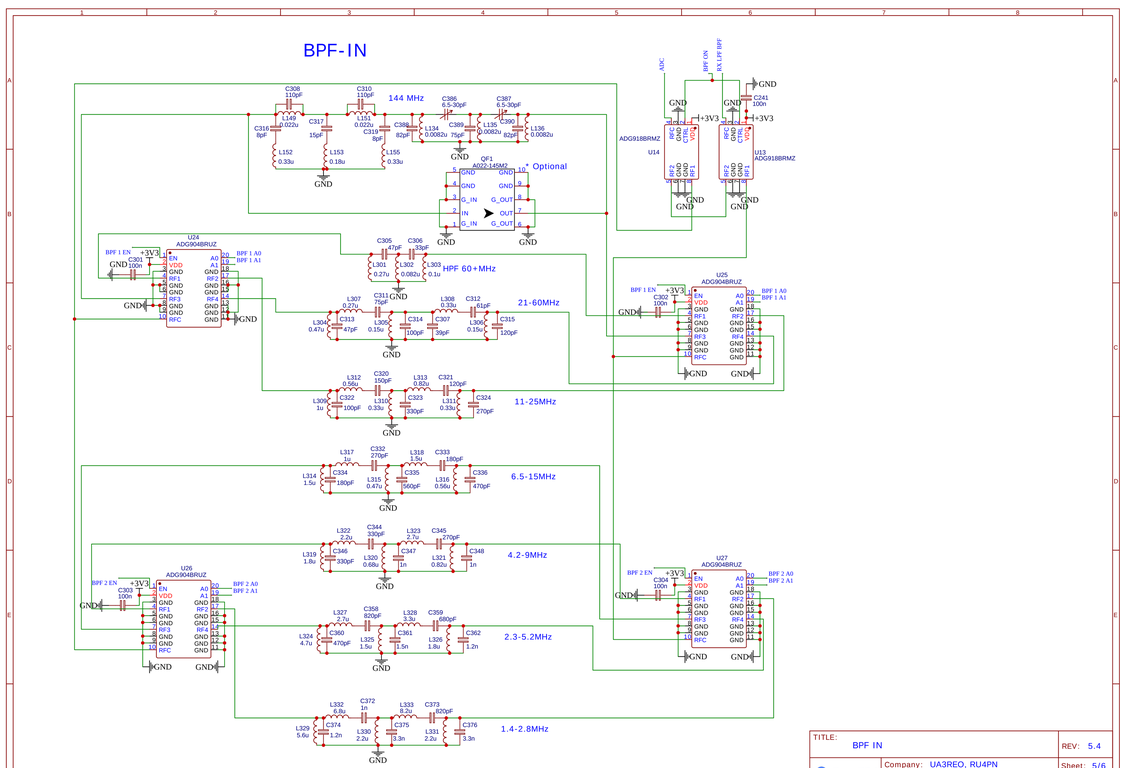
BPF-IN
144 MHz
HPF 60+MHz
21-60MHz
11-25MHz
6.5-15MHz
4.2-9MHz
2.3-5.2MHz
1.4-2.8MHz
TITLE: BPF IN
REV: 5.4
Company: UA3REO, RU4PN
Sheet: 5/6
Date: 2022-03-31

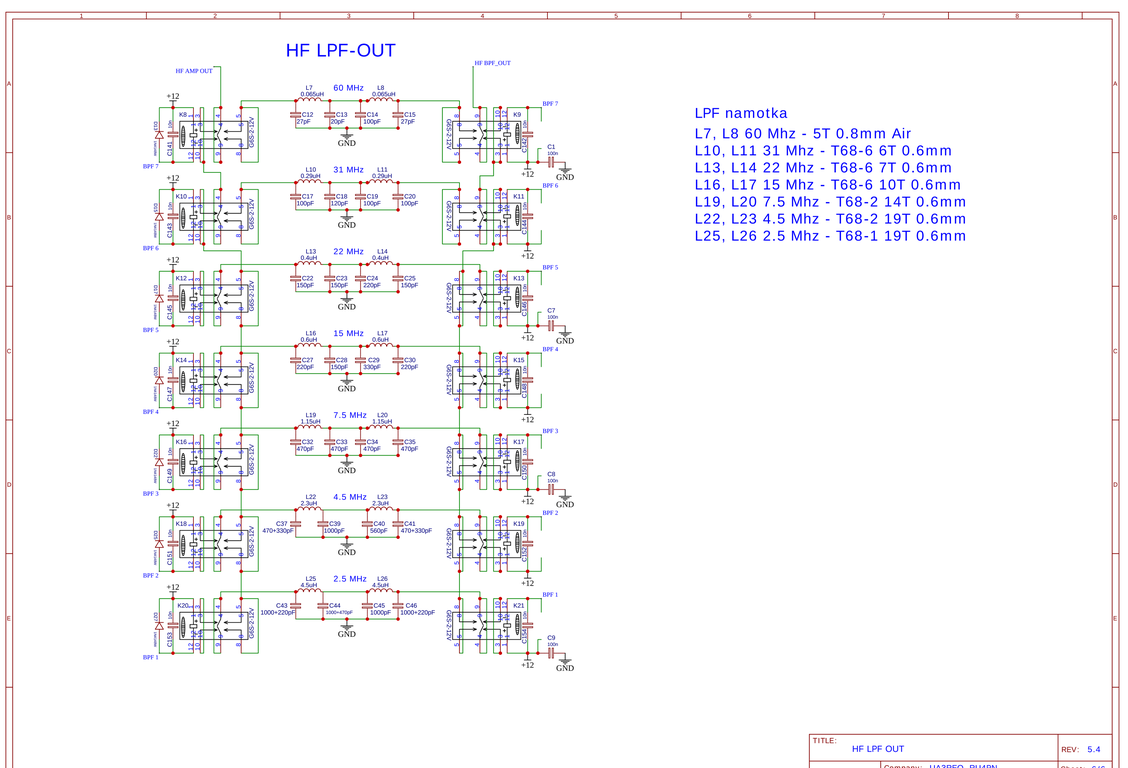
HF LPF-OUT
60 MHz
31 MHz
22 MHz
15 MHz
7.5 MHz
4.5 MHz
2.5 MHz
LPF namotka
L7, L8 60 Mhz - 5T 0.8mm Air
L10, L11 31 Mhz - T68-6 6T 0.6mm
L13, L14 22 Mhz - T68-6 7T 0.6mm
L16, L17 15 Mhz - T68-6 10T 0.6mm
L19, L20 7.5 Mhz - T68-2 14T 0.6mm
L22, L23 4.5 Mhz - T68-2 19T 0.6mm
L25, L26 2.5 Mhz - T68-1 19T 0.6mm
TITLE: HF LPF OUT
REV: 5.4
Company: UA3REO, RU4PN
Sheet: 6/6
Date: 2022-03-31