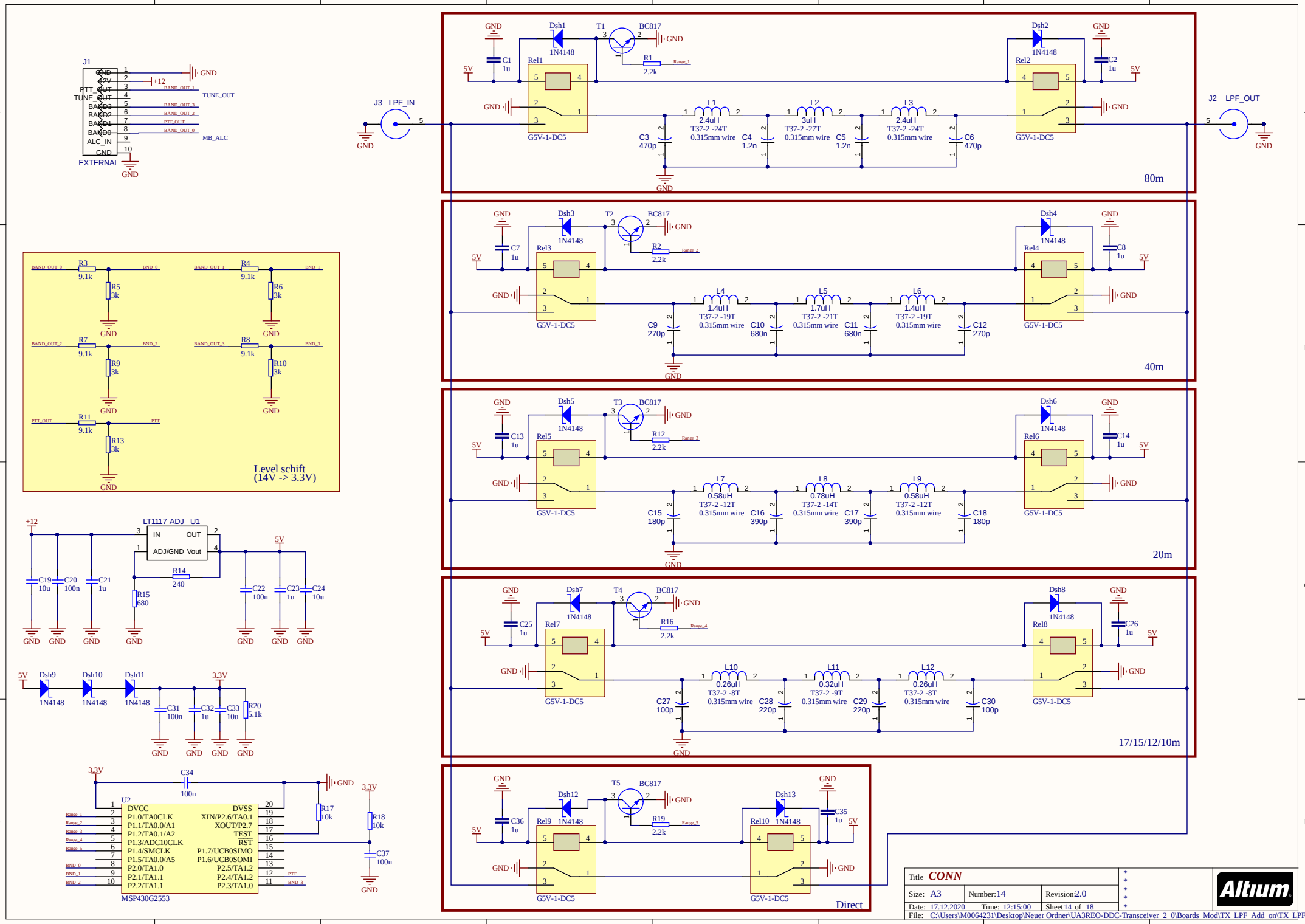
J1
GND
5V
PTT_OUT
TUNE_OUT
BAND3
BAND2
BAND1
BAND0
ALC_IN
GND
EXTERNAL
+12
BAND_OUT_1
TUNE_OUT
BAND_OUT_3
BAND_OUT_2
PTT_OUT
BAND_OUT_0
MB_ALC
J3 LPF_IN
J2 LPF_OUT
80m
40m
20m
17/15/12/10m
Direct
Level schift
(14V -> 3.3V)
LT1117-ADJ U1
IN
OUT
ADJ/GND Vout
3.3V
U2
MSP430G2553
DVCC
P1.0/TA0CLK
P1.1/TA0.0/A1
P1.2/TA0.1/A2
P1.3/ADC10CLK
P1.4/SMCLK
P1.5/TA0.0/A5
P2.0/TA1.0
P2.1/TA1.1
P2.2/TA1.1
DVSS
XIN/P2.6/TA0.1
XOUT/P2.7
TEST
RST
P1.7/UCB0SIMO
P1.6/UCB0SOMI
P2.5/TA1.2
P2.4/TA1.2
P2.3/TA1.0
Title CONN
Size: A3
Number:14
Revision:2.0
Date: 17.12.2020
Time: 12:15:00
Sheet 14 of 18
File: C:\Users\M0064231\Desktop\Neuer Ordner\UA3REO-DDC-Transceiver_2_0\Boards_Mod\TX_LPF_Add_on\TX_LPF_Add_on.