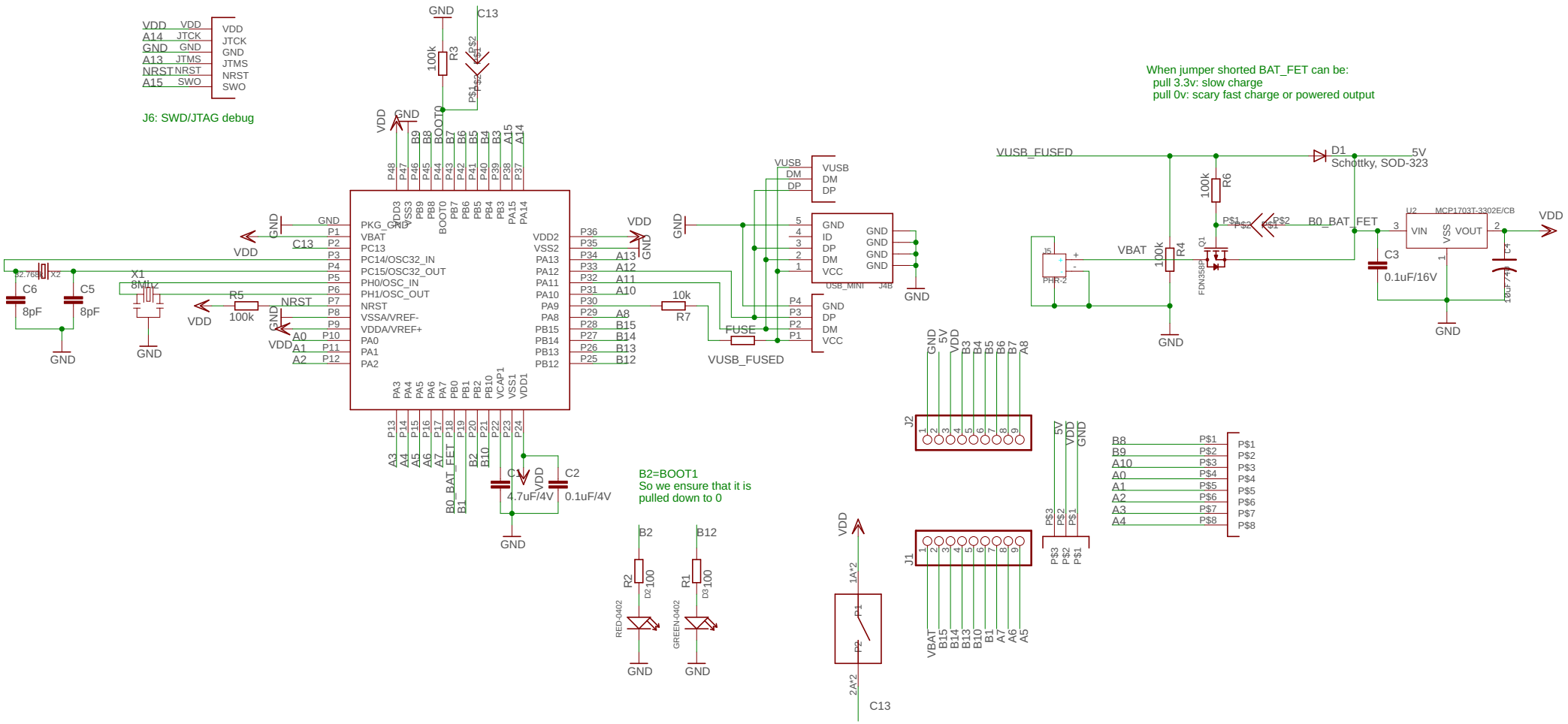
J6: SWD/JTAG debug
VDD
A14 JTCK
GND
A13 JTMS
NRST
A15 SWO
When jumper shorted BAT_FET can be:
pull 3.3v: slow charge
pull 0v: scary fast charge or powered output
VUSB_FUSED
D1
Schottky, SOD-323
5V
R6
100k
R4
100k
VBAT
B0_BAT_FET
U2
MCP1703T-3302E/CB
VIN
VSS
VOUT
C3
0.1uF/16V
C4
10uF/4V
FDN358P
Q1
J5
PHR-2
PKG_GND
VBAT
PC13
PC14/OSC32_IN
PC15/OSC32_OUT
PH0/OSC_IN
PH1/OSC_OUT
NRST
VSSA/VREF-
VDDA/VREF+
PA0
PA1
PA2
VDD2
VSS2
PA13
PA12
PA11
PA10
PA9
PA8
PB15
PB14
PB13
PB12
VCAP1
VSS1
VDD1
X2
32.768
X1
8MHz
C6
8pF
C5
8pF
R5
100k
R3
100k
C13
C1
4.7uF/4V
C2
0.1uF/4V
R7
10k
FUSE
VUSB
DM
DP
ID
VCC
USB_MINI
J4B
B2=BOOT1
So we ensure that it is
pulled down to 0
R2
100
D2
RED-0402
R1
100
D3
GREEN-0402
J2
J1
1A*2
2A*2
P1
P2
B8
B9
A10
A0
A1
A2
A3
A4
P$1
P$2
P$3
P$4
P$5
P$6
P$7
P$8
GND