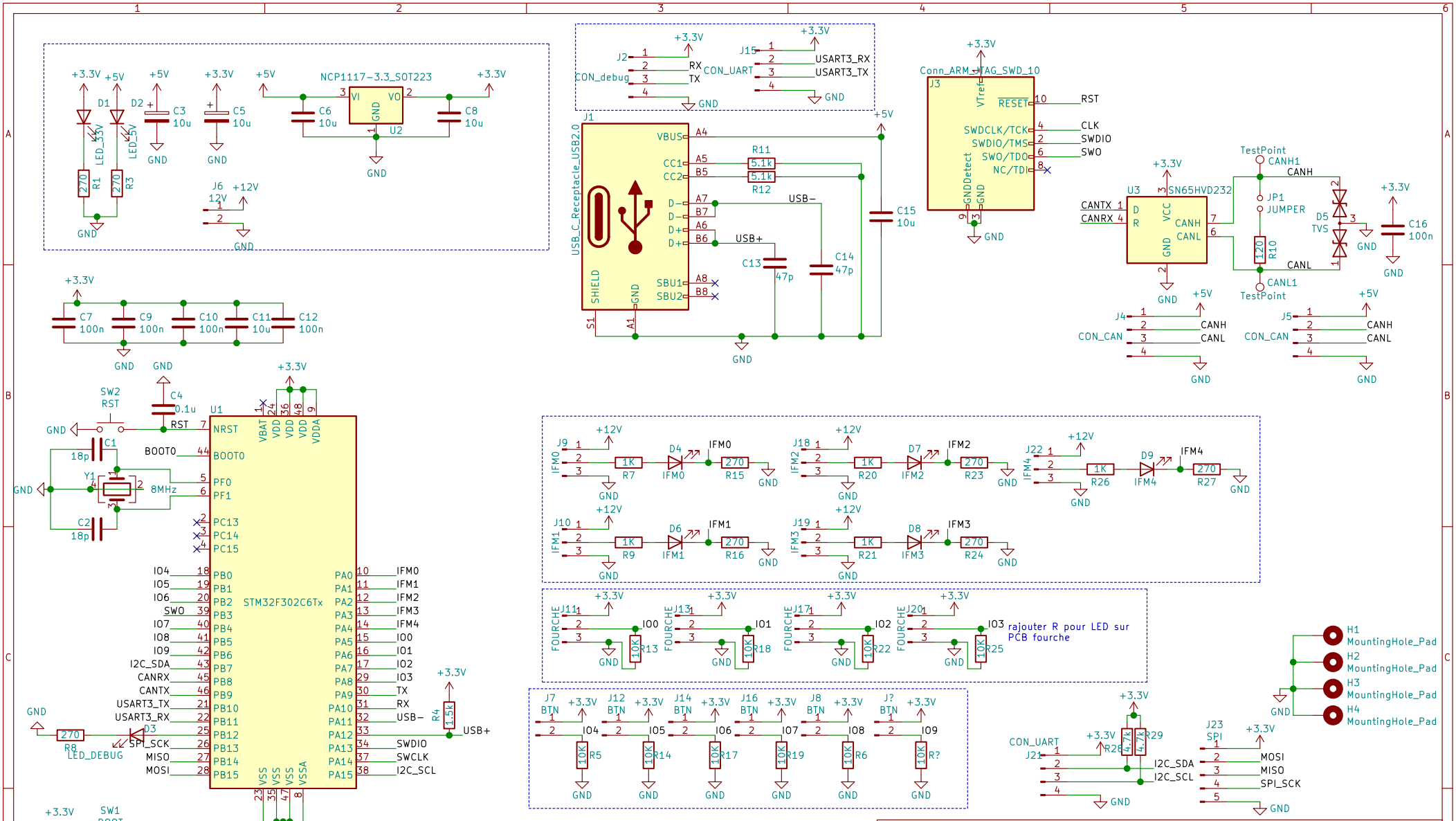
NCP1117-3.3_SOT223
STM32F302C6Tx
USB_C_Receptacle_USB2.0
Conn_ARM_JTAG_SWD_10
SN65HVD232
rajouter R pour LED sur PCB fourche
MountingHole_Pad
Sheet: /
File: IO_Board_V1.sch
Title:
Size: A4
Date:
Rev:
KiCad E.D.A. kicad (5.1.8)-1
Id: 1/1