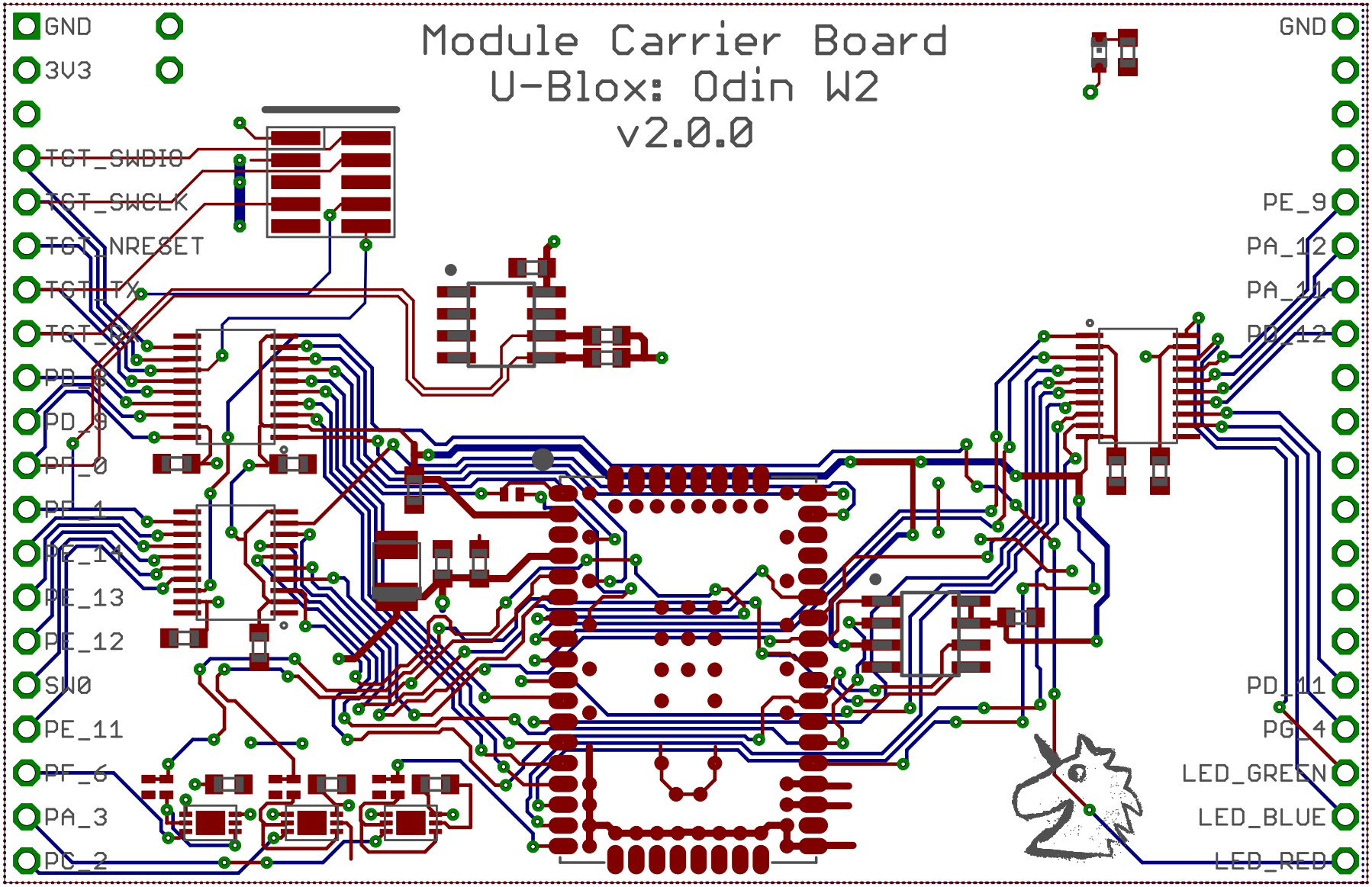
Module Carrier Board
U-Blox: Odin W2
v2.0.0
GND
3V3
TGT_SWDIO
TGT_SWCLK
TGT_NRESET
TGT_TX
TGT_RX
PD_8
PD_9
PF_0
PF_1
PE_14
PE_13
PE_12
SW0
PE_11
PF_6
PA_3
PC_2
GND
PE_9
PA_12
PA_11
PD_12
PD_11
PG_4
LED_GREEN
LED_BLUE
LED_RED