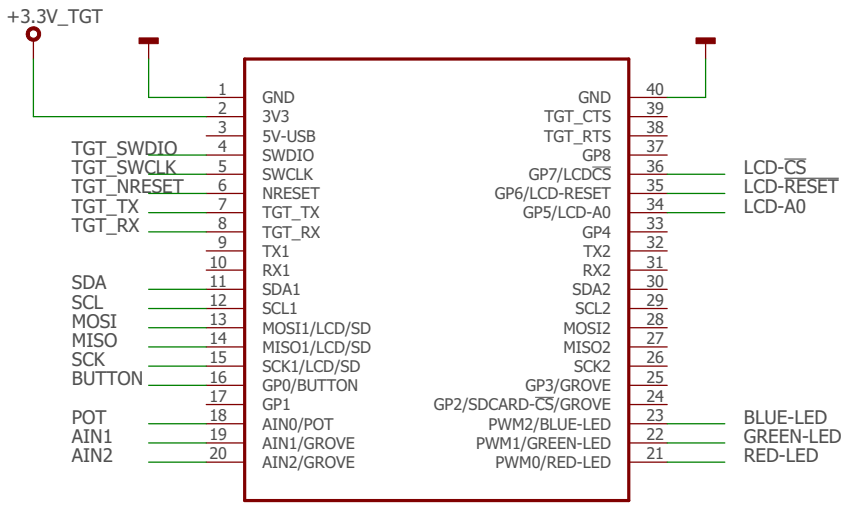

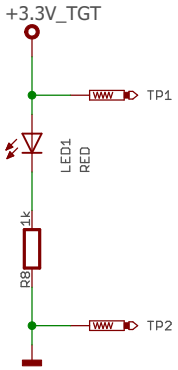

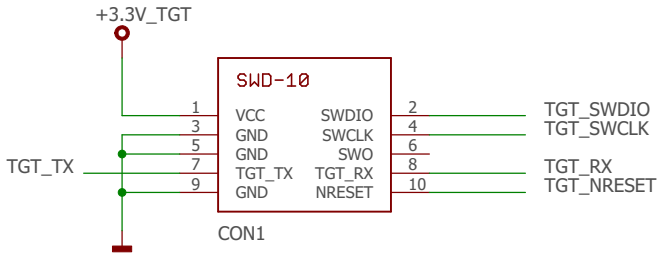

mbed-HDK

ModuleCarrier-RAK811-v1.0.0

07/12/2017 21:30

1/2

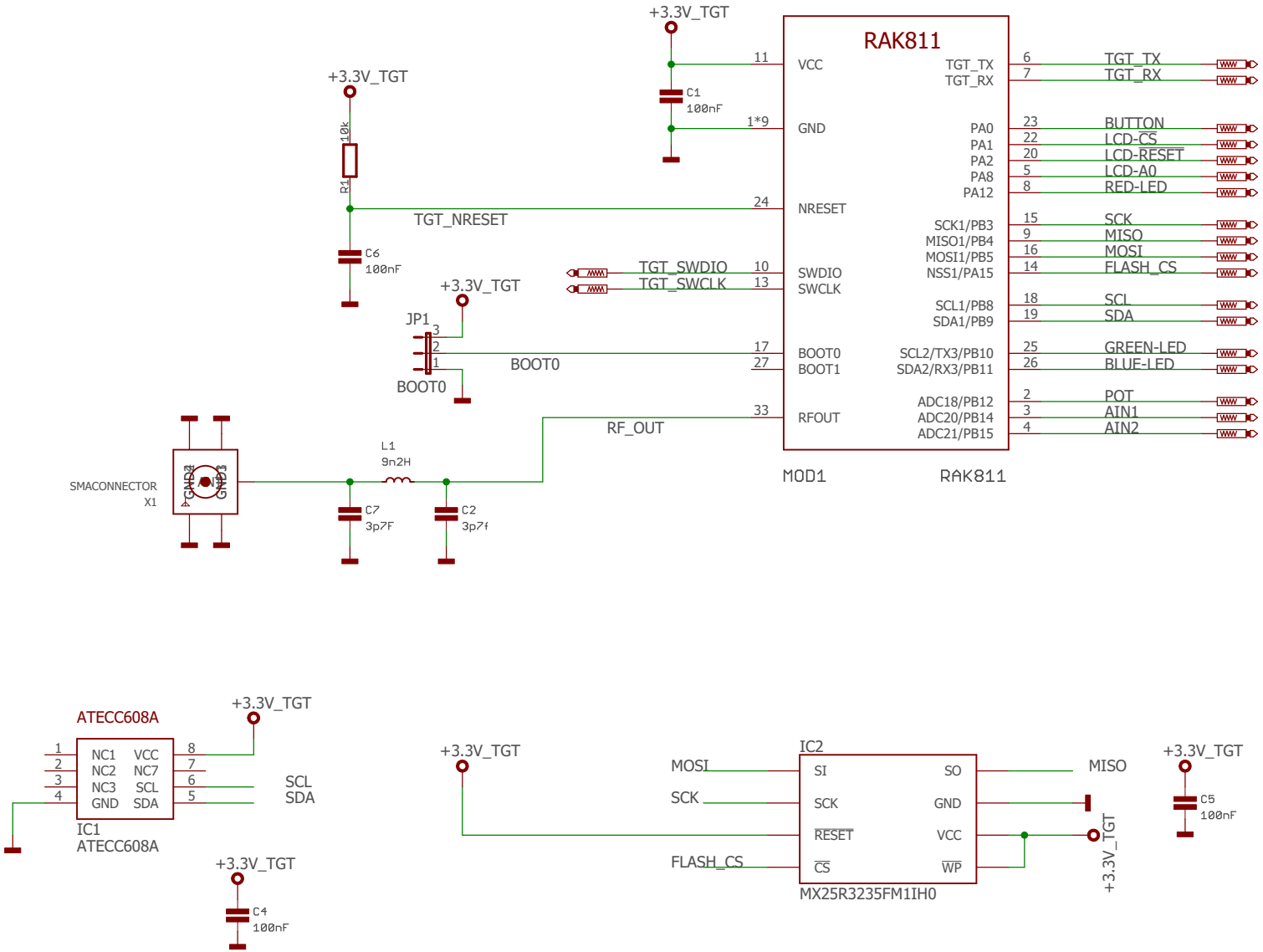

mbed-HDK

ModuleCarrier-RAK811-v1.0.0

07/12/2017 21:30

2/2