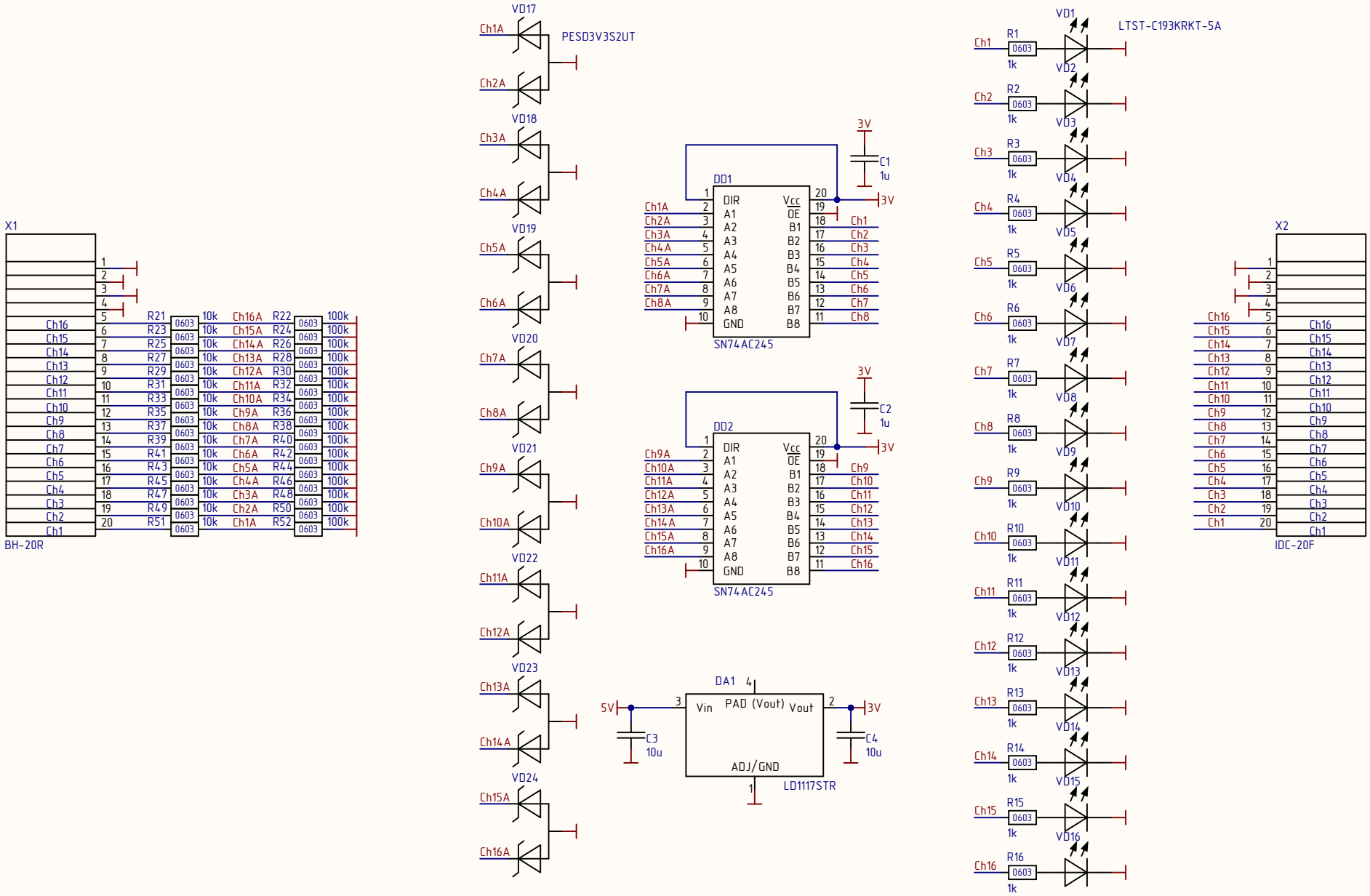
X1
BH-20R
Ch16 Ch15 Ch14 Ch13 Ch12 Ch11 Ch10 Ch9 Ch8 Ch7 Ch6 Ch5 Ch4 Ch3 Ch2 Ch1
R21 R23 R25 R27 R29 R31 R33 R35 R37 R39 R41 R43 R45 R47 R49 R51
0603
10k
Ch16A Ch15A Ch14A Ch13A Ch12A Ch11A Ch10A Ch9A Ch8A Ch7A Ch6A Ch5A Ch4A Ch3A Ch2A Ch1A
R22 R24 R26 R28 R30 R32 R34 R36 R38 R40 R42 R44 R46 R48 R50 R52
100k
VD17 VD18 VD19 VD20 VD21 VD22 VD23 VD24
PESD3V3S2UT
Ch1A Ch2A Ch3A Ch4A Ch5A Ch6A Ch7A Ch8A Ch9A Ch10A Ch11A Ch12A Ch13A Ch14A Ch15A Ch16A
DD1
DIR A1 A2 A3 A4 A5 A6 A7 A8 GND
Vcc OE B1 B2 B3 B4 B5 B6 B7 B8
SN74AC245
3V
C1 1u
DD2
C2 1u
DA1
5V
Vin PAD (Vout) Vout
ADJ/GND
LD1117STR
C3 10u
C4 10u
VD1 VD2 VD3 VD4 VD5 VD6 VD7 VD8 VD9 VD10 VD11 VD12 VD13 VD14 VD15 VD16
LTST-C193KRKT-5A
R1 R2 R3 R4 R5 R6 R7 R8 R9 R10 R11 R12 R13 R14 R15 R16
Ch1 Ch2 Ch3 Ch4 Ch5 Ch6 Ch7 Ch8 Ch9 Ch10 Ch11 Ch12 Ch13 Ch14 Ch15 Ch16
X2
IDC-20F