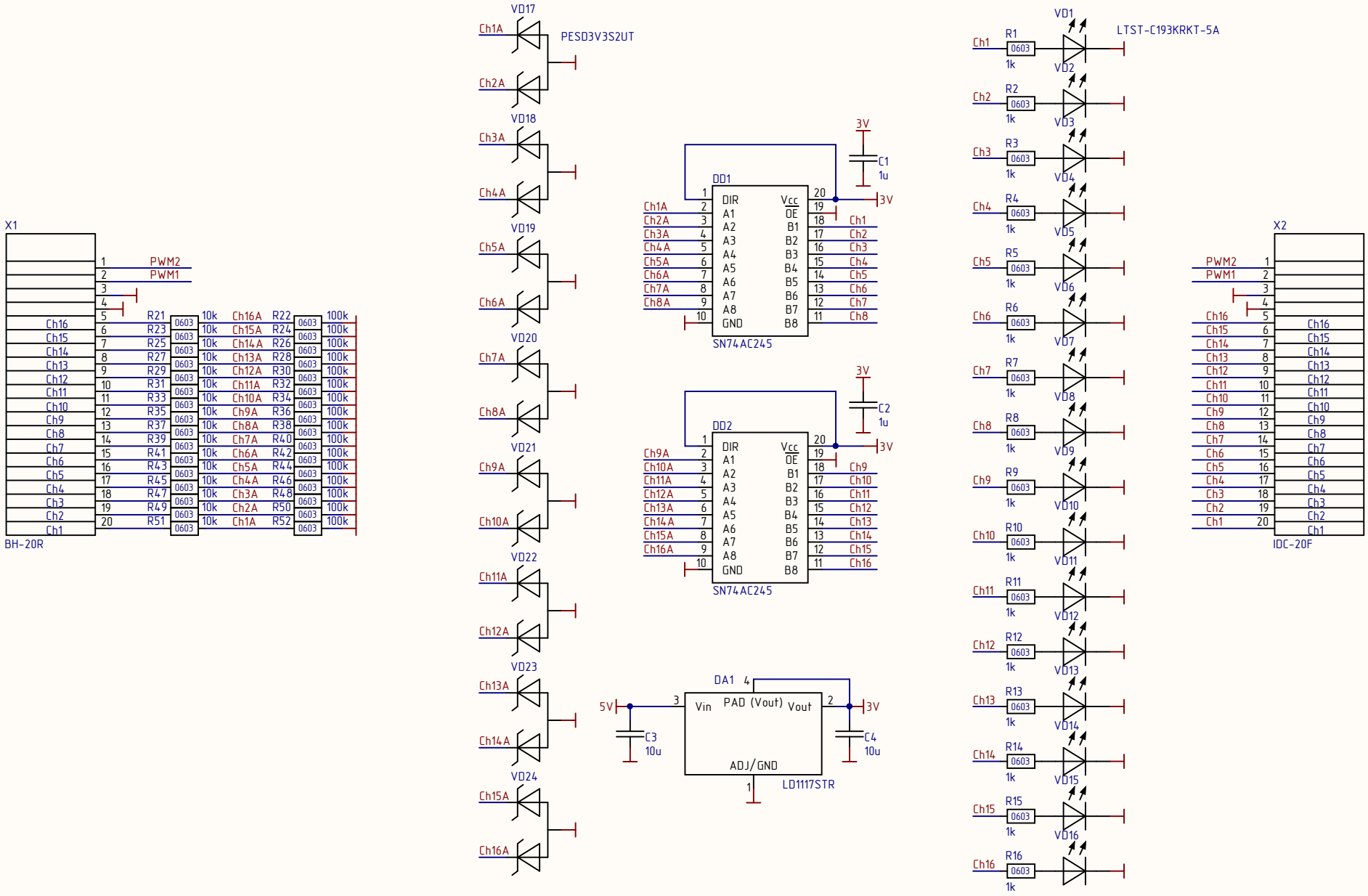
X1
BH-20R
PWM2
PWM1
Ch16 Ch15 Ch14 Ch13 Ch12 Ch11 Ch10 Ch9 Ch8 Ch7 Ch6 Ch5 Ch4 Ch3 Ch2 Ch1
R21 R23 R25 R27 R29 R31 R33 R35 R37 R39 R41 R43 R45 R47 R49 R51
10k Ch16A R22 100k
10k Ch15A R24 100k
10k Ch14A R26 100k
10k Ch13A R28 100k
10k Ch12A R30 100k
10k Ch11A R32 100k
10k Ch10A R34 100k
10k Ch9A R36 100k
10k Ch8A R38 100k
10k Ch7A R40 100k
10k Ch6A R42 100k
10k Ch5A R44 100k
10k Ch4A R46 100k
10k Ch3A R48 100k
10k Ch2A R50 100k
10k Ch1A R52 100k
0603
VD17 VD18 VD19 VD20 VD21 VD22 VD23 VD24
PESD3V3S2UT
Ch1A Ch2A Ch3A Ch4A Ch5A Ch6A Ch7A Ch8A Ch9A Ch10A Ch11A Ch12A Ch13A Ch14A Ch15A Ch16A
DD1
SN74AC245
DIR A1 A2 A3 A4 A5 A6 A7 A8 GND
Vcc OE B1 B2 B3 B4 B5 B6 B7 B8
C1 1u
3V
DD2
SN74AC245
C2 1u
DA1
LD1117STR
Vin PAD (Vout) Vout ADJ/GND
5V
C3 10u
C4 10u
VD1 VD2 VD3 VD4 VD5 VD6 VD7 VD8 VD9 VD10 VD11 VD12 VD13 VD14 VD15 VD16
LTST-C193KRKT-5A
R1 R2 R3 R4 R5 R6 R7 R8 R9 R10 R11 R12 R13 R14 R15 R16
1k
X2
IDC-20F