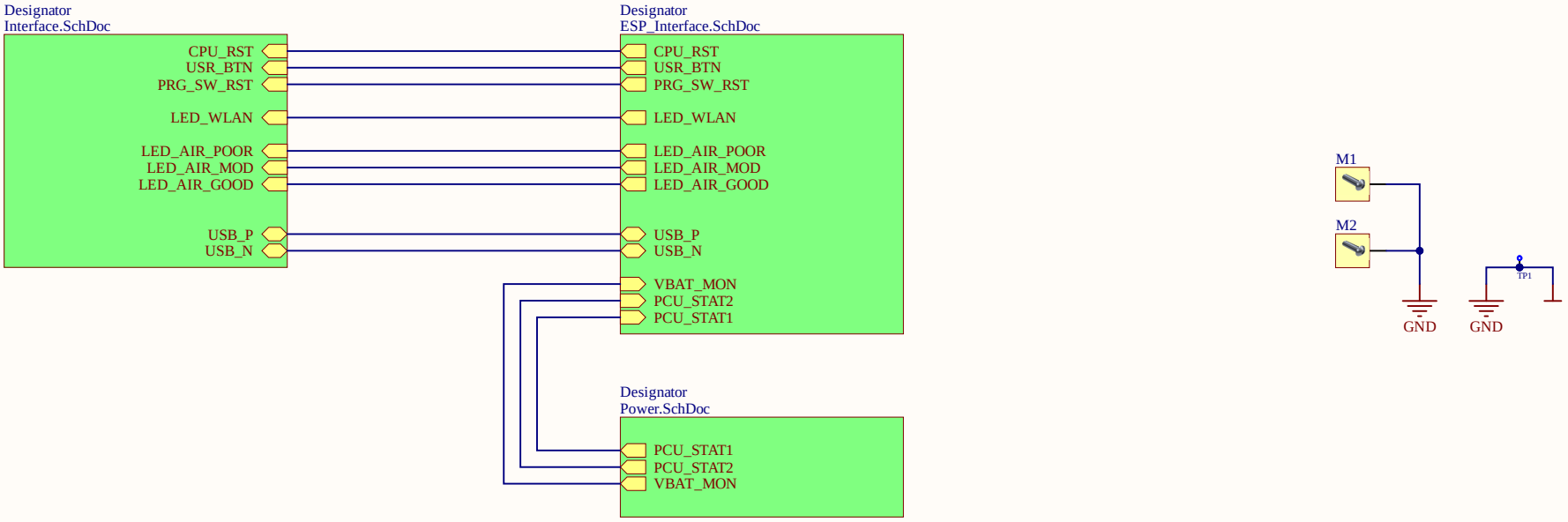

Project	HumiMainboard.PrjPcb		
Title	**Overview**	[No Variations]	Revision Rev.01
Date	17/05/2022	Sheet	1 / 4
Drawn By	Sandro Pedrett	Autor	Sandro Pedrett

ESP

Table 8: Current Consumption Depending on RF Modes

Work mode	Description		Peak (mA)
Active (RF working)	TX	802.11b, 1 Mbps, @20.5 dBm	345
		802.11g, 54 Mbps, @18 dBm	285
		802.11n, HT20, MCS7, @17.5 dBm	280
		802.11n, HT40, MCS7, @17 dBm	280
	RX	802.11b/g/n, HT20	82
		802.11n, HT40	84

Table 9: Current Consumption Depending on Work Modes

Work mode	Description		Typ	Unit
Modem-sleep[1, 2]	The CPU is powered on[3]	160 MHz	20	mA
		80 MHz	15	mA
Light-sleep	—		130	μA
Deep-sleep	RTC timer + RTC memory		5	μA
Power off	CHIP_EN is set to low level, the chip is powered off		1	μA

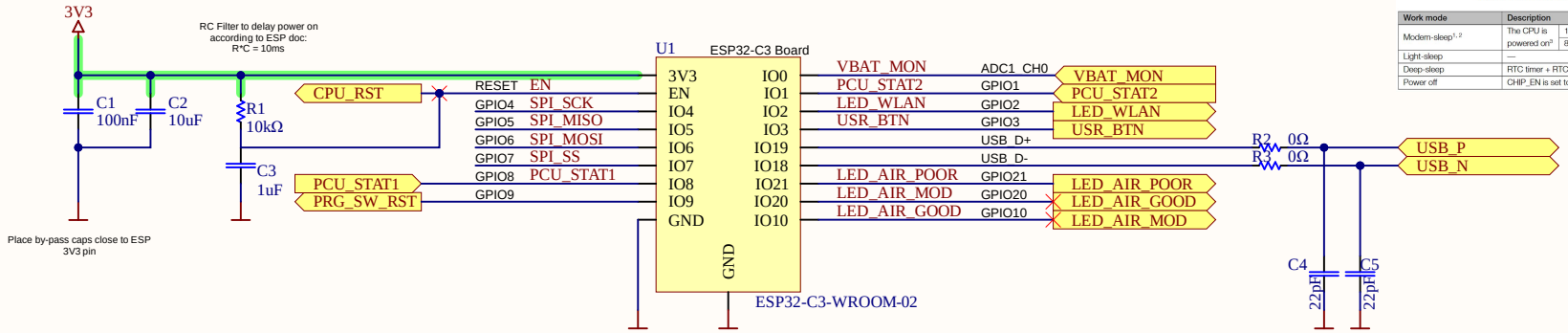

Sensors

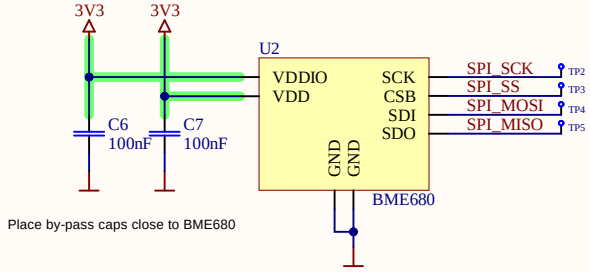

Project	HumiMainboard.PrjPcb		
Title	**CPU & Sensors** [No Variations]	Revision	Rev.01
Date	23/05/2022	Sheet	2 / 4
Drawn By	Sandro Pedrett	Autor	Sandro Pedrett

Power Management

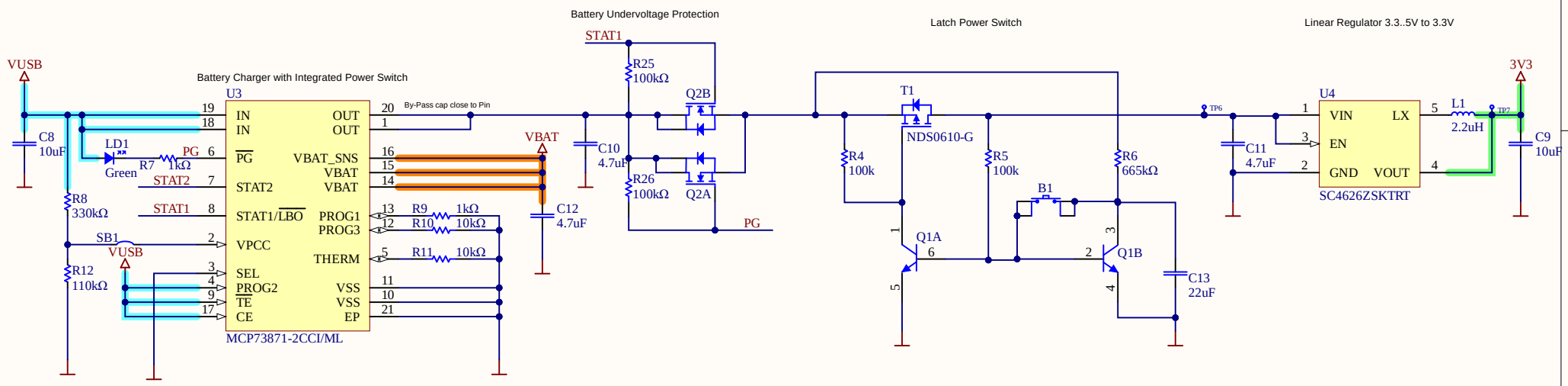

PROG1 --> Charge Current Regulation
1kΩ = 1A --> 1000V/1kΩ
PROG2 --> Input Current Selection (Low = 100mA | High = 500mA)
PROG3 --> Charge Termination
10k = 100mA --> Longer Battery Life
100k = 10mA --> More Capacity
SEL --> Input type Selection (Low for USB | High for AC Adapter)
CE --> Charge Enable when High

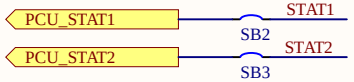

TABLE 5-1: STATUS OUTPUTS

CHARGE CYCLE STATE	STAT1	STAT2	$\overline{PG}$
Shutdown (V_{DD} = V_{BAT})	High-Z	High-Z	High-Z
Shutdown (V_{DD} = IN)	High-Z	High-Z	L
Shutdown (CE = L)	High-Z	High-Z	L
Preconditioning	L	High-Z	L
Constant Current	L	High-Z	L
Constant Voltage	L	High-Z	L
Charge Complete - Standby	High-Z	L	L
Temperature Fault	L	L	L
Timer Fault	L	L	L
Low Battery Output	L	High-Z	High-Z
No Battery Present	High-Z	High-Z	L
No Input Power Present	High-Z	High-Z	High-Z

Battery Management

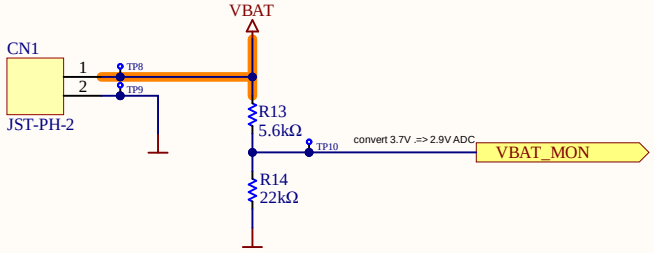

No.	Item	Characteristics	Remarks
1	Nominal Capacity	Minimum: 1900mAh Typical: 2000mAh	Standard discharge (0.2C) after Standard charge
2	Nominal Voltage	3.7V	—
3	Charging Cut-off Voltage	4.2V	—
4	Discharge Cut-off Voltage	3.0V	—
5	Standard Charge	Constant Current 0.5C Constant Voltage 4.2V 0.01 C cut-off	Charge Time : Approx 4.0h
6	Maximum Constant Charging Current	2000mA	—
7	Standard Discharge	Discharge at 0.2 C to 3.0V	—
8	Maximum Continuous Discharging Current	2000mA	

BAT1

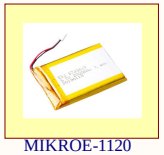

MIKROE-1120

Project	HumiMainboard.PrjPcb		
Title	**Power** [No Variations]	Revision	Rev.01
Date	31/05/2022	Sheet	3 / 4
Drawn By	Sandro Pedrett	Autor	Sandro Pedrett

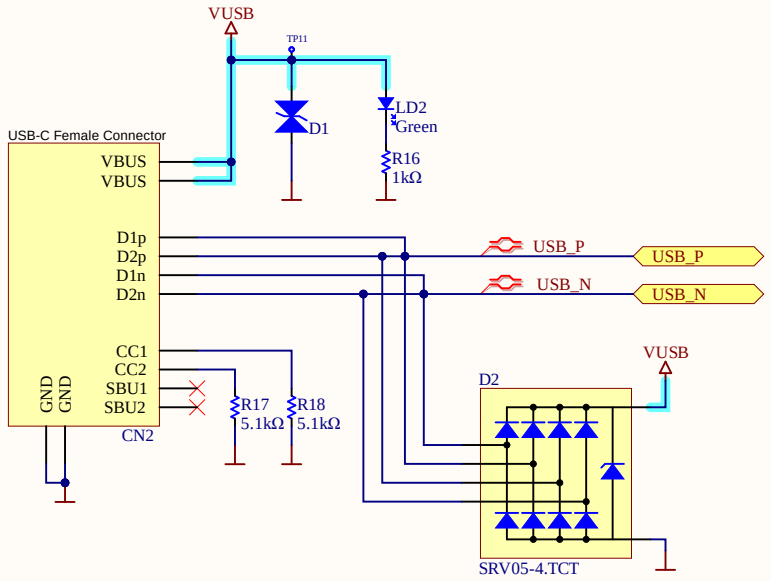

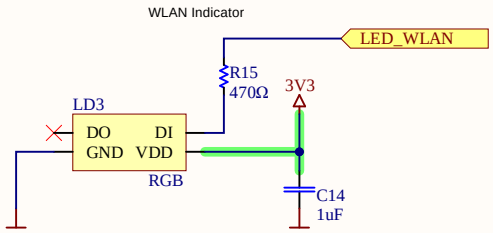

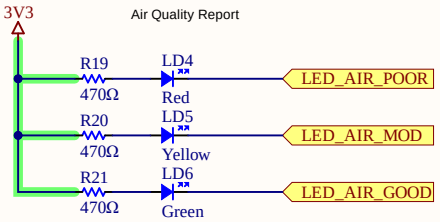

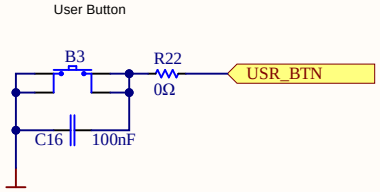

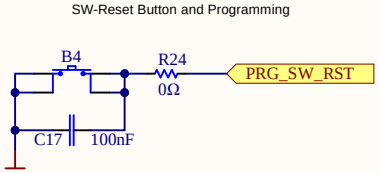

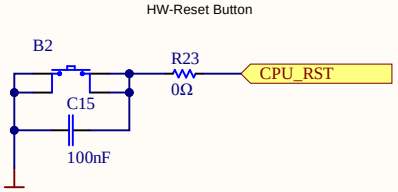

Project	HumiMainboard.PrjPcb		
Title	**Interface**	[No Variations]	Revision Rev.01
Date	17/05/2022	Sheet	4 / 4
Drawn By	Sandro Pedrett	Autor	Sandro Pedrett