USB-C Connector

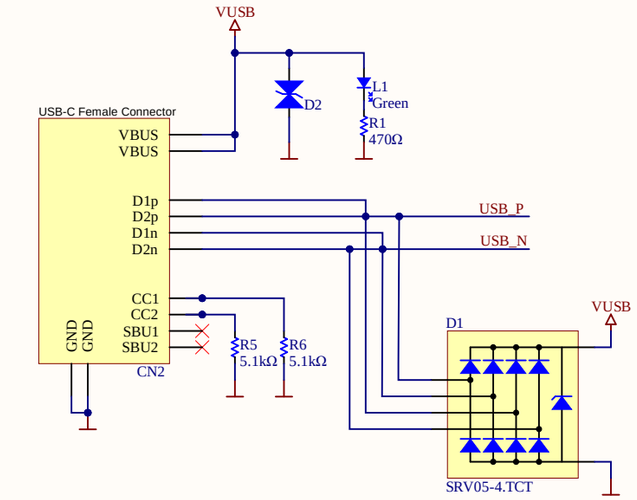

ESP32-C3

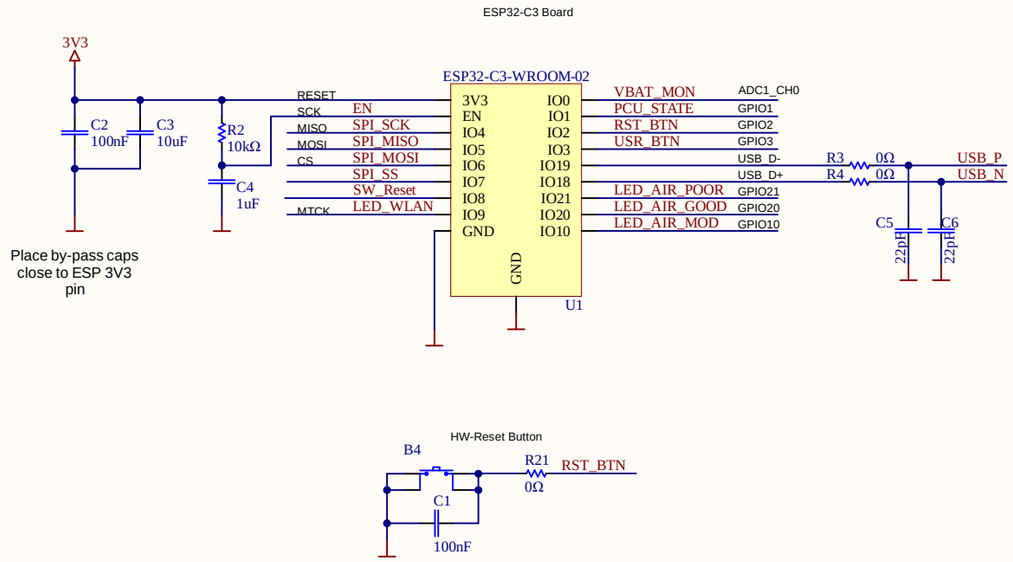

Sensors

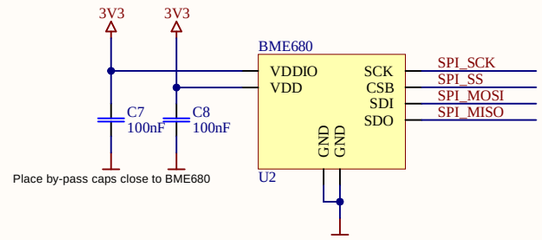

Power Management

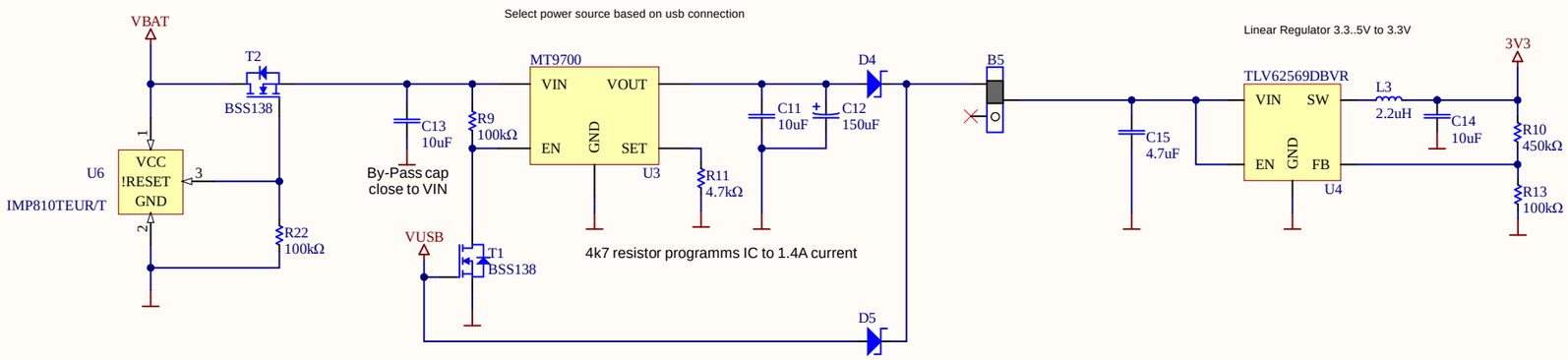

HMI

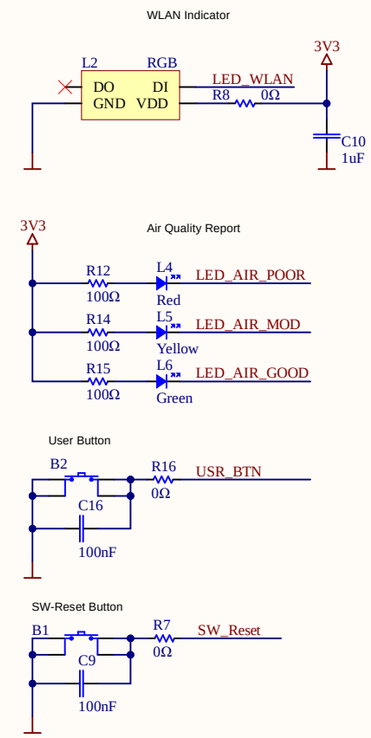

Battery Charger

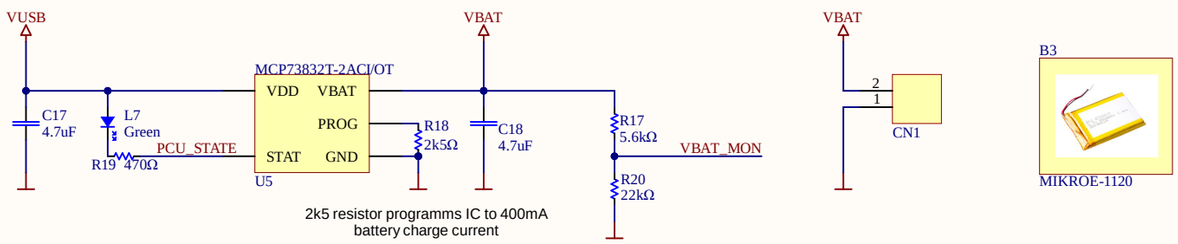

Title		
Size A3	Number	Revision
Date: 2/21/2022		Sheet of
File: D:\OneDrive\..\Overview.SchDoc		Drawn By: