USB-C Connector

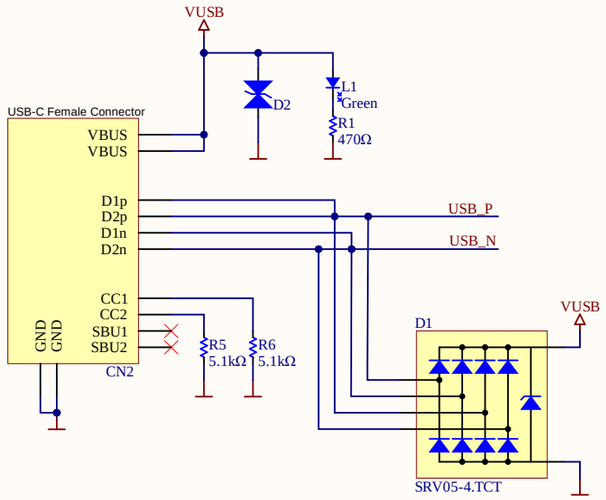

ESP32-C3

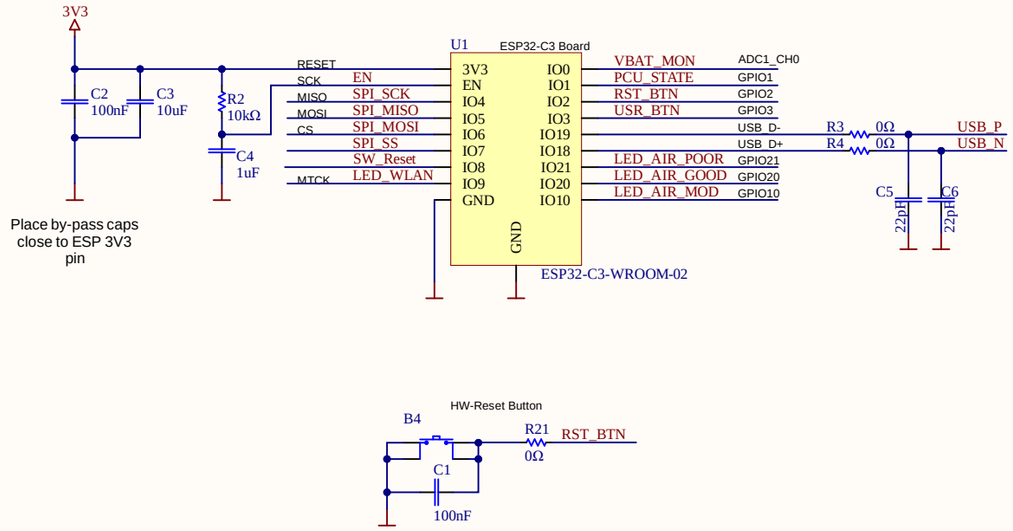

Sensors

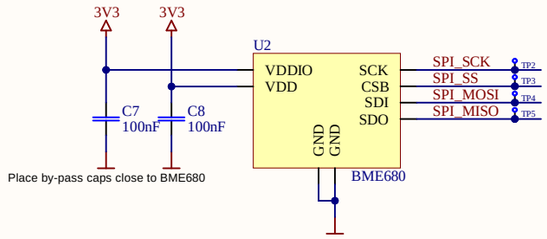

Power Management

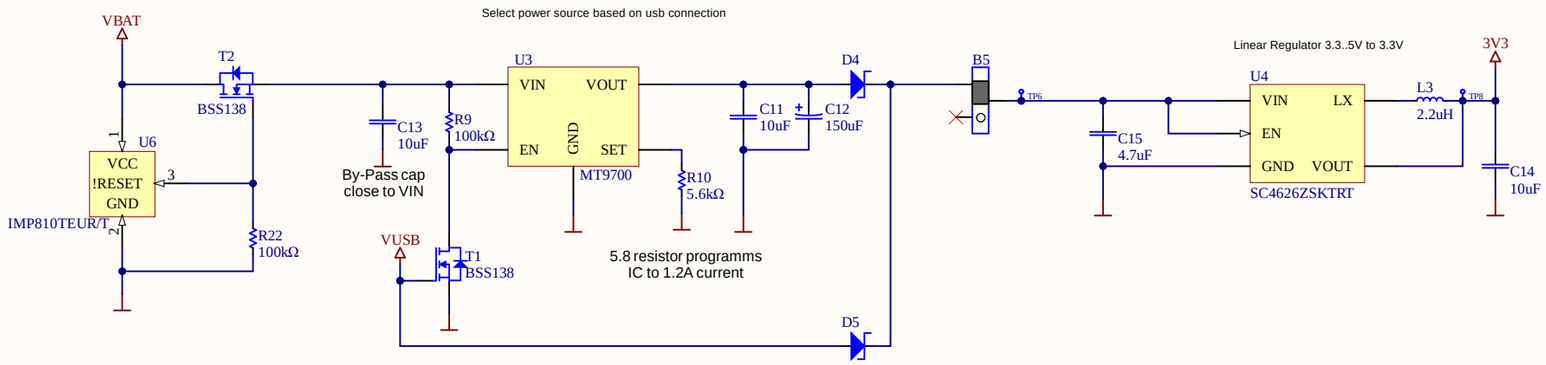

Battery Charger

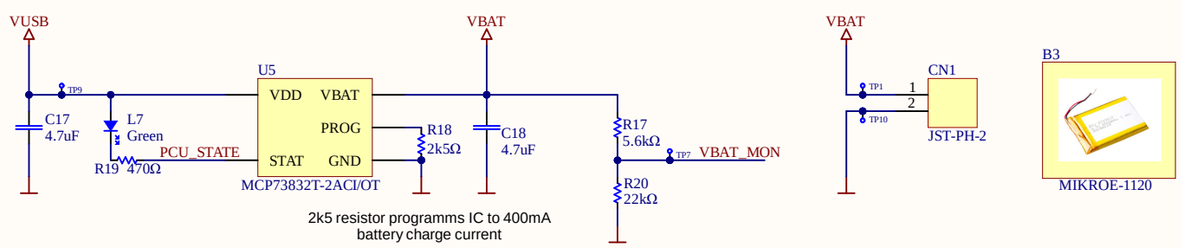

HMI

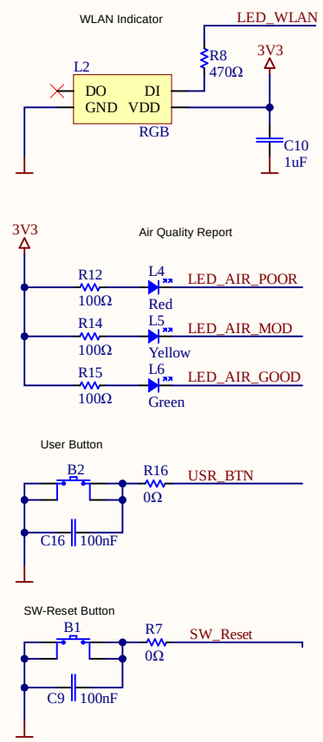

Title		
Size A3	Number	Revision
Date: 3/14/2022		Sheet of
File: C:\Users\..\Overview.SchDoc		Drawn By: