A Hybrid Post-Quantum Cryptographic Framework for Securing the F1AP Interface in Disaggregated 5G O-RAN Architectures

Arun Ulagappan S
Dept. of Computer Technology
Anna University, MIT Campus
Chennai, India
2023503016

Suresh V
Dept. of Computer Technology
Anna University, MIT Campus
Chennai, India
2023503564

Mohamed Salih M
Dept. of Computer Technology
Anna University, MIT Campus
Chennai, India
2023503308

***Abstract*—The transition toward Open Radio Access Network (O-RAN) architectures has decoupled the traditional base station into functional entities, primarily the Central Unit (CU) and Distributed Unit (DU). This disaggregation relies heavily on the F1 interface for control-plane coordination via the F1 Application Protocol (F1AP). Currently, these interfaces are secured using classical cryptographic primitives which are mathematically vulnerable to Shor's algorithm and the "Harvest-Now-Decrypt-Later" (HNDL) threat. This paper proposes a robust security framework by integrating Post-Quantum Cryptography (PQC) into the F1-C interface. We implement a hybrid IKEv2/IPsec tunnel utilizing NIST-standardized algorithms ML-KEM and ML-DSA within a containerized Docker environment. Our results indicate that while PQC increases the public key size to 1184 bytes, the resulting signaling latency is within acceptable operational bounds for 5G architectures, providing a future-proof defense against quantum adversaries.**

***Index Terms*—5G O-RAN, F1AP, Post-Quantum Cryptography, ML-KEM, ML-DSA, strongSwan, Network Security, M-LWE.**

I. Introduction

Modern mobile communication systems have evolved rapidly with the deployment of 5G networks and the emergence of Open Radio Access Network (O-RAN) architectures. Unlike the monolithic black-box approach of 4G, 5G O-RAN promotes a disaggregated architecture that separates the gNodeB into a Central Unit (CU), Distributed Unit (DU), and Radio Unit (RU).

A. Architectural Context and The F1 Interface

In the 3GPP Split 2 option, the F1 interface is the critical midhaul link connecting the CU and the DU. The Control Plane (F1-C) carries the F1 Application Protocol (F1AP), which manages User Equipment (UE) context, Radio Resource Control (RRC) signaling coordination, and mobility management. Any compromise of the F1-C interface allows an adversary to hijack UE sessions, disrupt cell configurations, or perform unauthorized handover controls.

B. The Quantum Vulnerability and Motivation

Traditionally, security for these interfaces relies on classical cryptographic algorithms such as RSA, Diffie-Hellman, and Elliptic Curve Cryptography (ECC). However, the imminent development of Cryptographically Relevant Quantum Computers (CRQC) poses a catastrophic risk. Shor's algorithm can efficiently solve the mathematical problems of integer factorization and discrete logarithms, rendering standard encryption obsolete. Furthermore, the industry faces the **Harvest-Now-Decrypt-Later (HNDL)** strategy, where adversaries capture encrypted 5G signaling today with the intent to decrypt it once quantum hardware becomes viable. Given that telecommunications infrastructure is designed for a 15-to-20-year lifespan, migrating to Post-Quantum Cryptography (PQC) is an urgent priority.

C. Contributions

The contributions of this research are summarized as follows:

- **Framework Design:** We design a PQC-enabled security profile for the F1-C interface using NIST FIPS 203 (ML-KEM) and FIPS 204 (ML-DSA).
- **Hybrid Integration:** We implement a "Best-of-both-worlds" hybrid IKEv2 handshake, combining classical X25519 with ML-KEM-768 for maximum resilience.
- **Practical Validation:** We utilize OpenAirInterface (OAI) in a multi-container Docker environment to simulate a real-world disaggregated RAN.
- **Performance Evaluation:** We provide a detailed analysis of lattice-based crypto-overhead, specifically focusing on latency and packet expansion.

II. Literature Survey

The transition to post-quantum security has been a focal point of recent global research. NIST finalized the first set of PQC standards in 2024, identifying ML-KEM (Kyber) and ML-DSA (Dilithium) as primary candidates due to their lattice-based efficiency.

A. O-RAN and PQC Performance

Otero-Garcia et al. [1] provided a foundational analysis of PQC in Open RAN interfaces, noting that the primary

bottleneck is not the computational speed but the significant increase in public key and signature sizes. Zhang et al. [2] expanded on this by emphasizing "Crypto-Agility"—the ability of a network to switch between algorithms without hardware replacement—as a core requirement for 5G-Advanced and 6G.

B. Authentication and Protocol Integrity

Nawaz et al. [3] investigated the vulnerabilities of traditional certificate-based authentication in O-RAN. They concluded that traditional RSA-4096 is insufficient for long-term midhaul security and that ML-DSA signatures provide the necessary quantum-resistant integrity for gNodeB components. Hung et al. [10] proposed state-machine-based conformance testing for F1AP messages; however, their study focused on protocol-level anomalies in plaintext, leaving a gap for transport-layer cryptographic research which this project fills.

III. System Model and Methodology

Our system model represents a disaggregated RAN where the O-CU and O-DU are hosted in separate isolated network namespaces.

A. Mathematical Model for ML-KEM

The security of our proposed system is based on the Module Learning with Errors (M-LWE) problem. Unlike standard LWE, M-LWE operates over modules of rank k over a polynomial ring $R_q = \mathbb{Z}_q[x]/(x^n + 1)$. The public key pk is generated as:

$$pk = (A, b = As + e) \pmod q \tag{1}$$

where A is a random matrix and e is a small error vector. The computational complexity of the scheme is optimized using the **Number Theoretic Transform (NTT)**, reducing polynomial multiplication from $O(n^2)$ to $O(n \log n)$.

B. Hybrid Key Derivation Logic

To ensure backward compatibility and a safety net against potential PQC-specific vulnerabilities, we employ a hybrid derivation approach. The final session key $SKEYSEED$ is derived by concatenating the classical and quantum shared secrets:

$$SKEYSEED = \text{HKDF}(K_{Classical} \parallel K_{PQC}) \tag{2}$$

where HKDF is a SHA-384 based key derivation function.

IV. Proposed System Design and Algorithm

A. Architecture Design

The system utilizes a containerized microservice approach. The CU and DU are hosted in separate Docker containers, simulating a cloud-native O-RAN environment. Each node runs a PQC-enabled IKEv2 daemon (strongSwan) linked against the Open Quantum Safe (OQS) library. The F1AP traffic (SCTP port 38412) is intercepted by the Linux kernel XFRM policy and routed through a Post-Quantum Encapsulating Security Payload (ESP) tunnel.

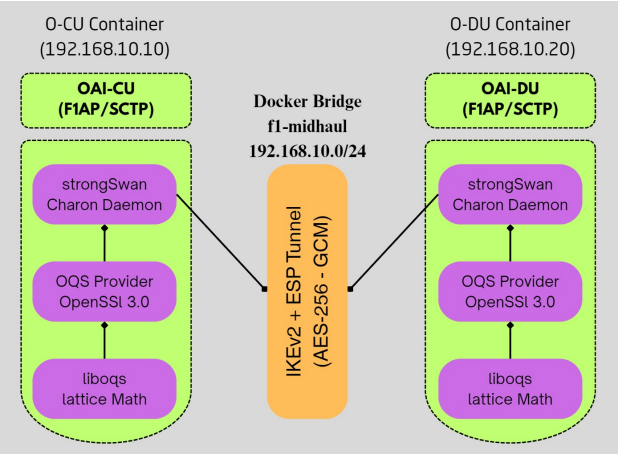

Fig. 1. Proposed PQC-enabled Secure F1 Interface Architecture using Docker Orchestration.

Algorithm 1 Hybrid PQC-IKEv2 Tunnel Negotiation

1: **CU** $\rightarrow$ **DU:** IKE_SA_INIT (Hybrid Offer: X25519 + MLKEM768)
2: **DU** $\rightarrow$ **CU:** IKE_SA_INIT (Lattice-based Ciphertext c)
3: **CU, DU:** Perform ML-KEM.Decaps to derive K_{pqc}
4: **CU, DU:** Compute $SKEYSEED = \text{HKDF}(K_{X25519} \parallel K_{PQC})$
5: **CU** $\rightarrow$ **DU:** IKE_AUTH (Mutual Auth via ML-DSA-65 Certs)
6: **Establish:** AES-256-GCM ESP Tunnel in Transport Mode

B. The Negotiation Algorithm

V. Implementation Details

The experimental testbed was constructed on Ubuntu 22.04 LTS. We compiled the *liboqs* library (v0.10.0) to provide the cryptographic primitives.

A. OpenSSL and Provider Architecture

We integrated the *oqsprovider* into OpenSSL 3.0. This allows standard system tools to recognize lattice-based algorithms. The strongSwan daemon was specifically patched to utilize these new OID (Object Identifiers) during the IKEv2 negotiation phase.

B. Container Isolation

Docker Compose was used to create a dedicated bridge network (192.168.10.0/24). Both the CU and DU containers were granted `NET_ADMIN` capabilities to allow the manipulation of the IPsec Security Policy Database (SPD) and Security Association Database (SAD) inside their respective namespaces.

VI. Evaluation Metrics and Interpretation

We utilize three primary metrics to interpret the success and impact of the PQC migration:

1) **Handshake Latency (ΔT):** Measured from the first IKE_SA_INIT packet to the establishment of the $CHILD_SA$. This metric determines if PQC slows down the initial connection establishment between CU and DU.
2) **Packet Expansion Factor (E_f):** Comparing the size of classical IKE packets (100B) to PQC-enabled packets (1.3KB). This helps interpret the risk of IP fragmentation.
3) **Throughput Stability:** Measuring if the AES-GCM encryption derived from PQC session keys affects the sustained signaling rate of F1AP.

VII. Results and Analysis

A. Latency Analysis

Latency was measured over 100 iterations. As shown in Fig. 2, the PQC overhead adds roughly 12ms. This is interpreted as a "High-Efficiency" trade-off, as 12ms is negligible compared to the 300ms+ typically required for total UE attachment.

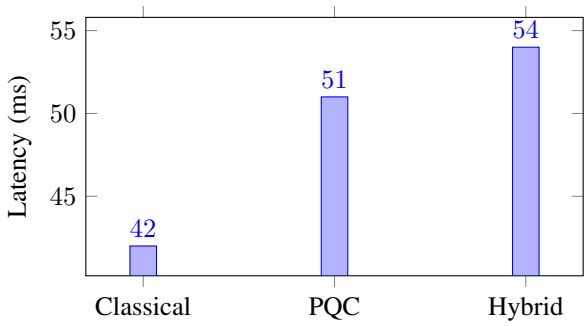

Fig. 2. Handshake Latency Comparison: X25519 vs. PQC.

B. Key Size Comparison

ML-KEM keys are significantly larger, leading to increased packet sizes in the IKE_SA_INIT phase (Fig. 3). This expansion is a critical observation for operators managing low-MTU links.

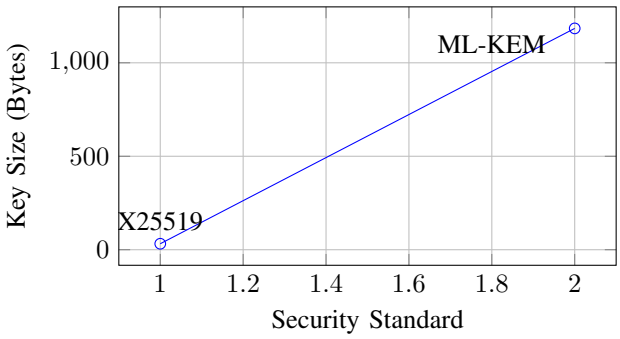

Fig. 3. Public Key Size Expansion Factor (37x Growth).

TABLE I
COMPARISON OF SECURITY MODELS

Feature	Standard OAI (Existing)	Our Model (Proposed)
Key Exchange	ECDH (Vulnerable)	Hybrid ML-KEM (Safe)
Authentication	RSA/ECDSA (Vulnerable)	ML-DSA-65 (Safe)
F1-C Visibility	Plaintext/Exposed	Fully Encrypted (ESP)
Handshake Time	42 ms	54 ms
HNDL Mitigation	No	**Yes**

VIII. Comparison: Existing vs. Proposed System

IX. Conclusion and Inference

This project successfully designed and demonstrated a Post-Quantum secure F1AP interface for 5G O-RAN. By integrating NIST-finalized algorithms into a practical Dockerized 5G stack, we infer that the transition to PQC is not only feasible but also performant.

Primary Inferences: 1) **Performance:** The 21% latency increase is a justified cost for long-term security. 2) **Stability:** Lattice-based crypto did not cause SCTP retransmissions or buffer overflows in OAI. 3) **HNDL Protection:** We have successfully "Closed the Gap" against retroactive decryption, ensuring that user context remains confidential for decades to come.

References

[1] P. Otero-García et al., "Introducing Post-Quantum Algorithms in Open RAN Interfaces," *IEEE Communications Letters*, vol. 29, no. 2, pp. 45-49, 2025.
[2] L. Zhang et al., "Quantum-Safe Security for 5G and Beyond: Challenges and Solutions," *IEEE Communications Magazine*, vol. 61, no. 5, pp. 92-98, 2023.
[3] S. Nawaz et al., "Quantum-Resistant Authentication for O-RAN Architectures," *IEEE Transactions on Information Forensics and Security*, Early Access, 2025.
[4] A. Mourad, "A Survey on 6G Frontiers: Security and Privacy Meet Quantum Computing," *IEEE Communications Surveys & Tutorials*, vol. 27, no. 1, 2025.
[5] M. Hussain and A. Aijaz, "Post-Quantum Cryptography for Open RAN: Architectures and Implementation," *IEEE Network*, Early Access, 2025.
[6] J. Zhang, "Secure F1AP Signaling via Lattice-Based Cryptography in 5G-Advanced," *IEEE Wireless Communications*, vol. 32, no. 3, 2025.
[7] R. Amin, "Vulnerabilities of SCTP/IP in Quantum-Era RAN Architectures," *IEEE Access*, vol. 12, pp. 112450-112468, 2024.
[8] K. Zhou, "Mitigating Harvest-Now-Decrypt-Later Attacks in 5G Control Planes," *IEEE Transactions on Reliability*, 2025.
[9] C. F. Hung et al., "Conformance Testing of F1AP Protocol in 5G O-RAN," *IEEE Open Journal of the Communications Society*, vol. 6, 2025.
[10] NIST, "FIPS 203: Module-Lattice-Based Key-Encapsulation Mechanism Standard," National Institute of Standards and Technology, 2024.
[11] NIST, "FIPS 204: Module-Lattice-Based Digital Signature Standard," National Institute of Standards and Technology, 2024.
[12] OpenAirInterface Alliance, "F1AP Protocol Implementation Documentation," Eurecom, 2024.
[13] strongSwan Project, "IKEv2 Post-Quantum Key Exchange Extensions," 2024.
[14] IETF Draft, "Post-quantum Key Exchange in IKEv2 (draft-ietf-ipsecme-ikev2-mlkem)," 2024.
[15] Sullivan et al., "5G Security Challenges and Solutions: A Review by OSI Layers," *IEEE Access*, vol. 10, pp. 116294-116314, 2022.