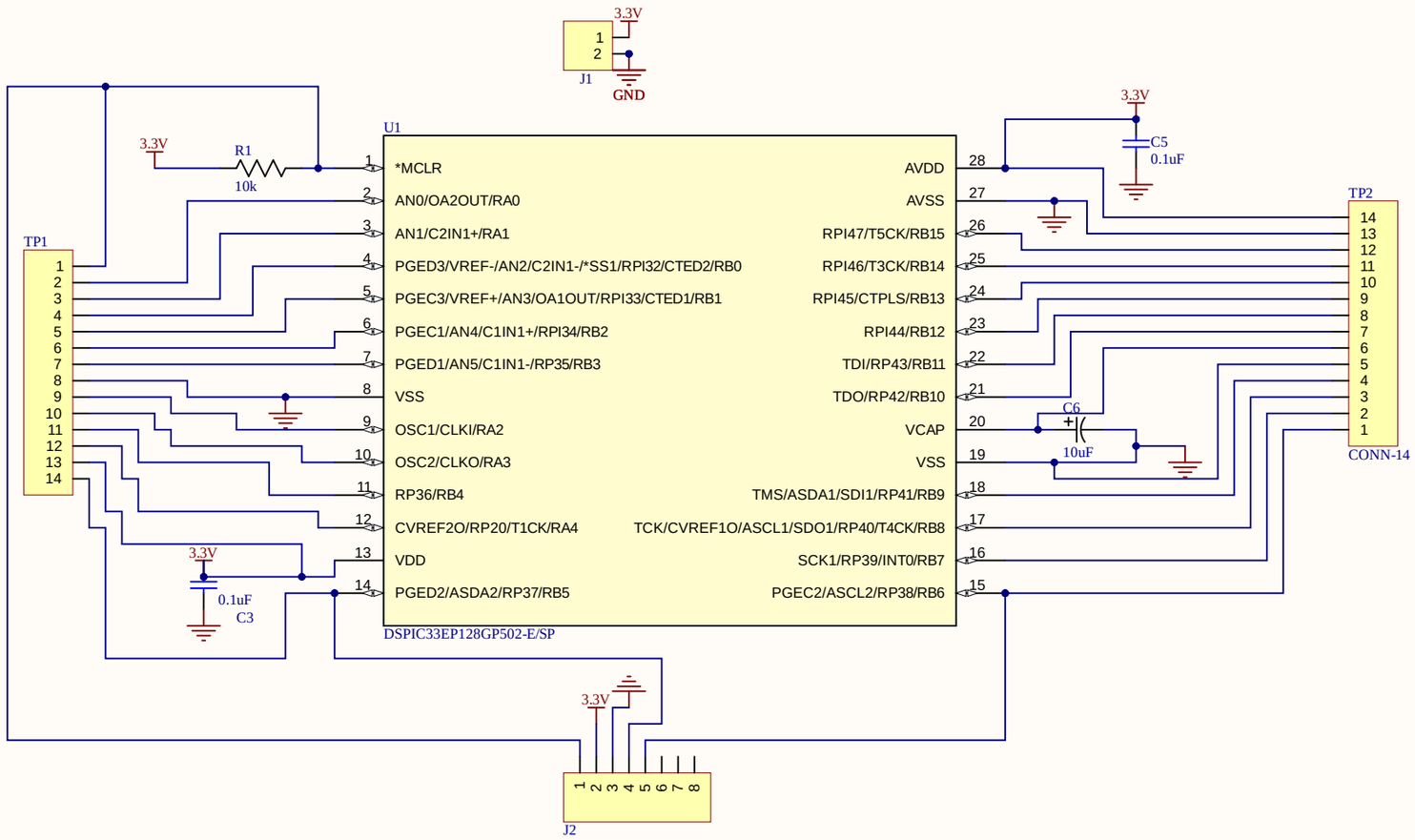

Title:	*
Company Name:	*
Date:	2025-03-15
File:	MCU2S copy.SchDoc