Module Design Group

Master Revision Control Document

Allegro Rel 17.4
3957.02

RELEASE DATE: 08/08/25 ENGINEER: mschauble PCB DESIGNER: darinfrederi

DESCRIPTION: LPDDR5 315 BALL SOCAMM2, REV 0.51

PCB FABRICATION REV:	3957-10-01	REV	B	(Overall revision of PCB artwork, Fabrication Drawing and Array Part Number)
PCB ARTWORK:	3957-32-01	REV	B	
FABRICATION DRAWING:	3957-30-01	REV	B	
ARRAY PART NUMBER:	3957-31-1x11	REV	A	

MAXIMUM COMPONENT AREA (CSP-base only):
MAXIMUM COMPONENT DENSITY:

COMMENTS:
Board contains sensitive components.

DOCUMENT HISTORY:

PCB ARTWORK - 3957-32-01

REV A - 06/13/25
Original Design

REV B - 08/08/25
- Removed Q1, C104 and repurposed R2 connecting VIN_BULK to U5_VCC
- Added some additional VDDQ and VDD2 caps so the 22uF 0402 caps could be reduced to 10uF
- moved vias to reduce VIN_BULK cross talk

FABRICATION DRAWING - 3957-30-01

REV A - 06/13/25
Original Design

REV B - 08/08/25
- Removed Q1, C104 and repurposed R2 connecting VIN_BULK to U5_VCC
- Added some additional VDDQ and VDD2 caps so the 22uF 0402 caps could be reduced to 10uF
- moved vias to reduce VIN_BULK cross talk

SCHEMATIC DRAWING - 3957-20-01

REV A - 06/13/25
Original Design

REV B - 08/08/25
- Removed Q1, C104 and repurposed R2 connecting VIN_BULK to U5_VCC
- Added some additional VDDQ and VDD2 caps so the 22uF 0402 caps could be reduced to 10uF
- moved vias to reduce VIN_BULK cross talk

ASSEMBLY DRAWING - 3957-40-01

REV A - 06/13/25
Original Design

REV B - 08/08/25
- Removed Q1, C104 and repurposed R2 connecting VIN_BULK to U5_VCC
- Added some additional VDDQ and VDD2 caps so the 22uF 0402 caps could be reduced to 10uF

• moved vias to reduce VIN_BULK cross talk

ARRAY PART NUMBER - 3957-31-1x11

REV A - 06/13/25
Original Design

CONFIDENTIALITY NOTE

THIS PRINT REMAINS THE PROPERTY OF MICRON TECHNOLOGY, INC. - ALL INFORMATION HEREIN IS CONFIDENTIAL - IT IS LOANED SUBJECT TO RETURN UPON DEMAND AND ON CONDITION THAT IT NOT BE COPIED OR USED IN ANY WAY DETRIMENTAL TO MICRON TECHNOLOGY'S INTERESTS.

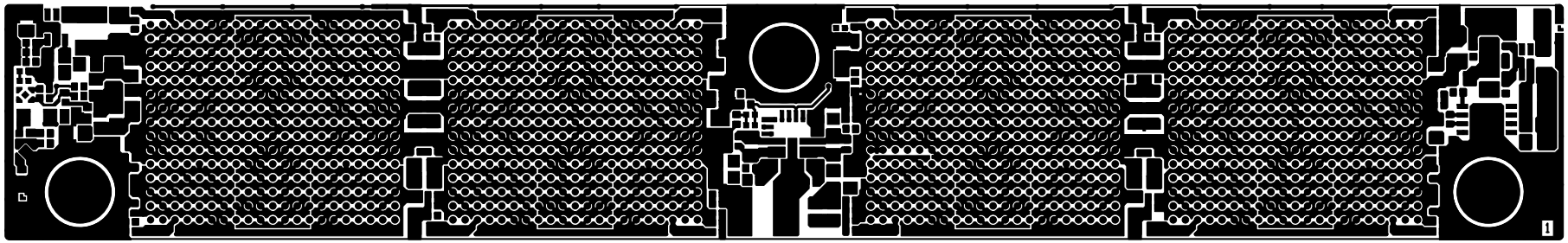

LAYER 1 PRIMARY SIDE 3957-32-01 REV B

CONFIDENTIALITY NOTE

THIS PRINT REMAINS THE PROPERTY OF MICRON TECHNOLOGY, INC. - ALL INFORMATION HEREIN IS CONFIDENTIAL - IT IS LOANED SUBJECT TO RETURN UPON DEMAND AND ON CONDITION THAT IT NOT BE COPIED OR USED IN ANY WAY DETRIMENTAL TO MICRON TECHNOLOGY'S INTERESTS.

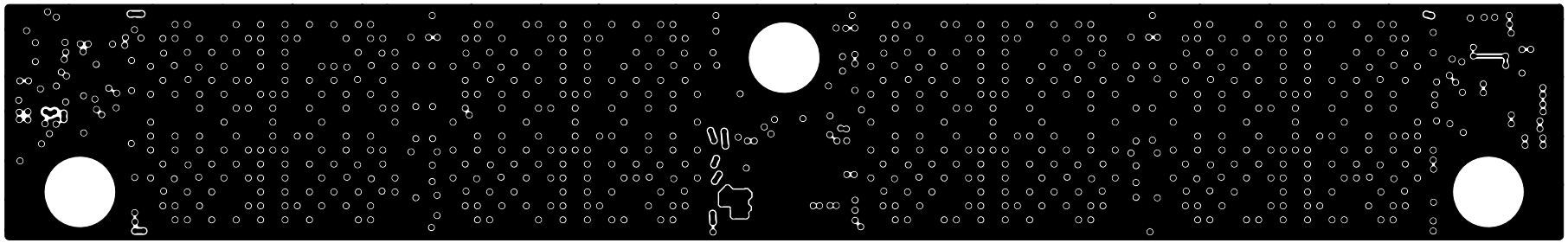

LAYER 2 GND2 PLANE 3957-32-01 REV B

CONFIDENTIALITY NOTE

THIS PRINT REMAINS THE PROPERTY OF MICRON TECHNOLOGY, INC. - ALL INFORMATION HEREIN IS CONFIDENTIAL - IT IS LOANED SUBJECT TO RETURN UPON DEMAND AND ON CONDITION THAT IT NOT BE COPIED OR USED IN ANY WAY DETRIMENTAL TO MICRON TECHNOLOGY'S INTERESTS.

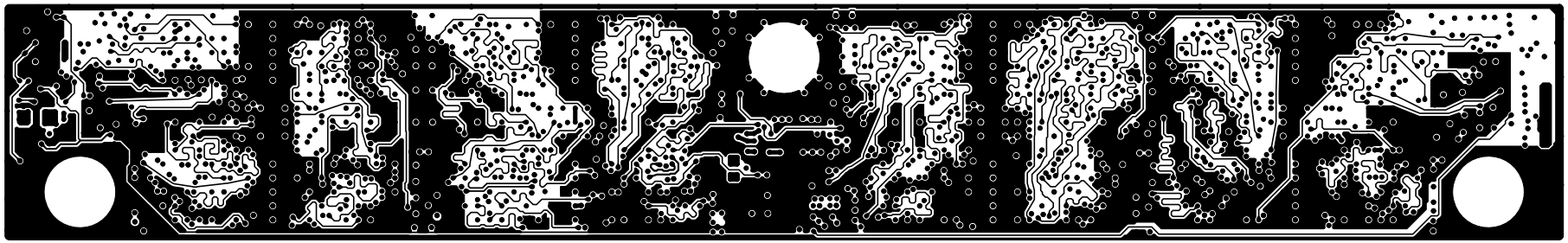

LAYER 3 S3 SIGNAL 3957-32-01 REV B

CONFIDENTIALITY NOTE

THIS PRINT REMAINS THE PROPERTY OF MICRON TECHNOLOGY, INC. - ALL INFORMATION HEREIN IS CONFIDENTIAL - IT IS LOANED SUBJECT TO RETURN UPON DEMAND AND ON CONDITION THAT IT NOT BE COPIED OR USED IN ANY WAY DETRIMENTAL TO MICRON TECHNOLOGY'S INTERESTS.

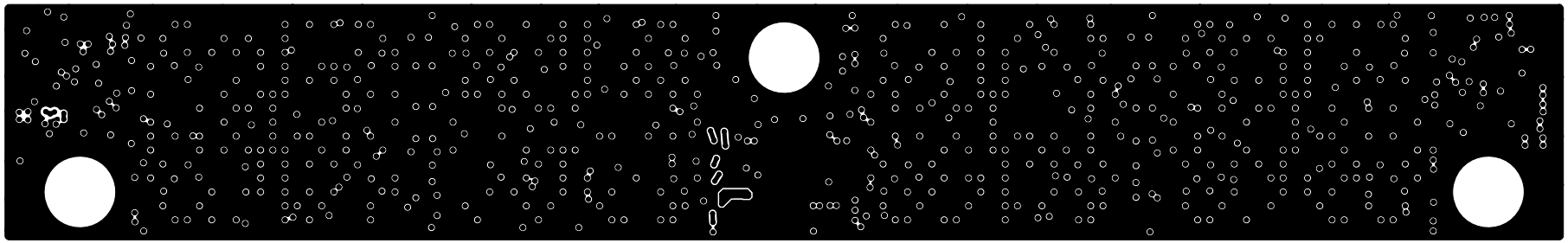

LAYER 4 GND4 PLANE 3957-32-01 REV B

CONFIDENTIALITY NOTE

THIS PRINT REMAINS THE PROPERTY OF MICRON TECHNOLOGY, INC. - ALL INFORMATION HEREIN IS CONFIDENTIAL - IT IS LOANED SUBJECT TO RETURN UPON DEMAND AND ON CONDITION THAT IT NOT BE COPIED OR USED IN ANY WAY DETRIMENTAL TO MICRON TECHNOLOGY'S INTERESTS.

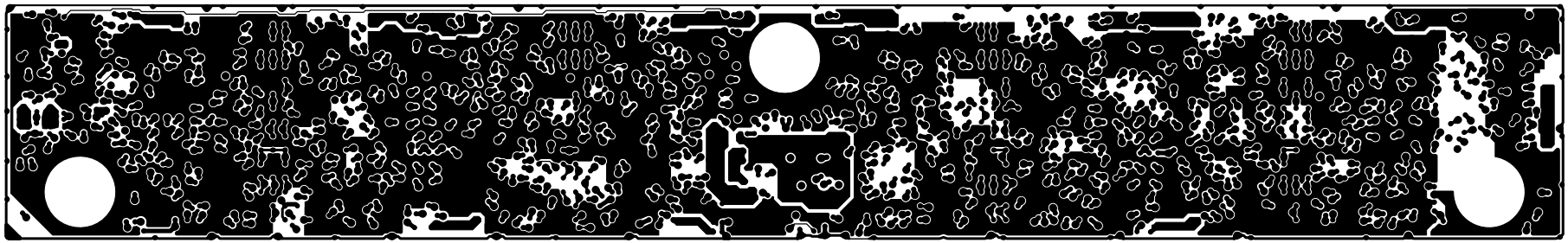

LAYER 5 VDD5 SIGNAL 3957-32-01 REV B

CONFIDENTIALITY NOTE

THIS PRINT REMAINS THE PROPERTY OF MICRON TECHNOLOGY, INC. - ALL INFORMATION HEREIN IS CONFIDENTIAL - IT IS LOANED SUBJECT TO RETURN UPON DEMAND AND ON CONDITION THAT IT NOT BE COPIED OR USED IN ANY WAY DETRIMENTAL TO MICRON TECHNOLOGY'S INTERESTS.

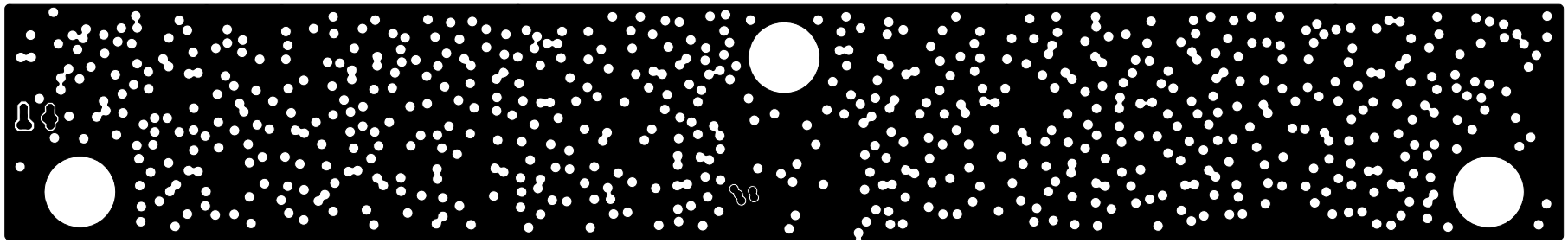

LAYER 6 GND6 PLANE 3957-32-01 REV B

CONFIDENTIALITY NOTE

THIS PRINT REMAINS THE PROPERTY OF MICRON TECHNOLOGY, INC. - ALL INFORMATION HEREIN IS CONFIDENTIAL - IT IS LOANED SUBJECT TO RETURN UPON DEMAND AND ON CONDITION THAT IT NOT BE COPIED OR USED IN ANY WAY DETRIMENTAL TO MICRON TECHNOLOGY'S INTERESTS.

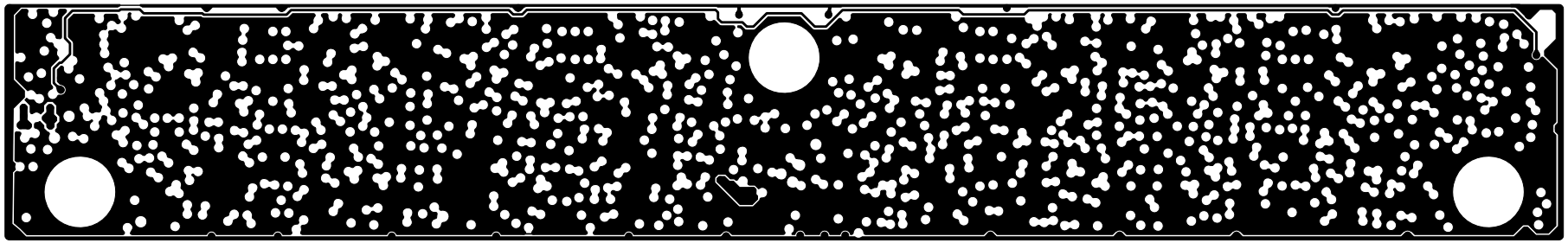

LAYER 7 VDD7 PLANE 3957-32-01 REV B

CONFIDENTIALITY NOTE

THIS PRINT REMAINS THE PROPERTY OF MICRON TECHNOLOGY, INC. - ALL INFORMATION HEREIN IS CONFIDENTIAL - IT IS LOANED SUBJECT TO RETURN UPON DEMAND AND ON CONDITION THAT IT NOT BE COPIED OR USED IN ANY WAY DETRIMENTAL TO MICRON TECHNOLOGY'S INTERESTS.

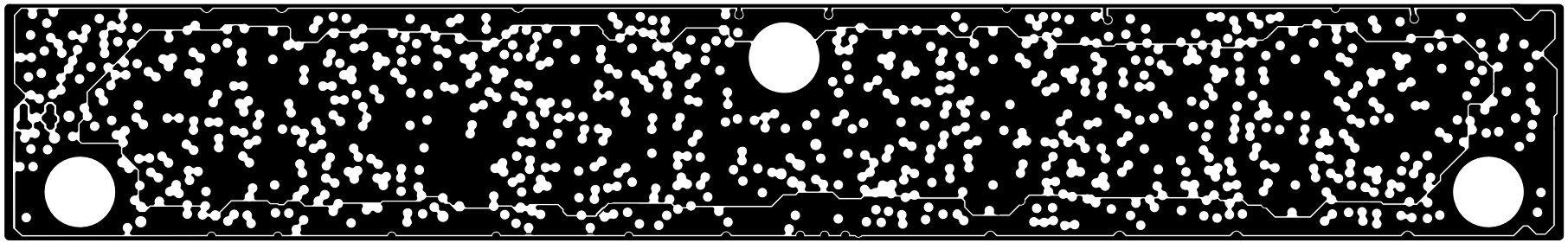

LAYER 8 VDD8 PLANE 3957-32-01 REV B

CONFIDENTIALITY NOTE

THIS PRINT REMAINS THE PROPERTY OF MICRON TECHNOLOGY, INC. - ALL INFORMATION HEREIN IS CONFIDENTIAL - IT IS LOANED SUBJECT TO RETURN UPON DEMAND AND ON CONDITION THAT IT NOT BE COPIED OR USED IN ANY WAY DETRIMENTAL TO MICRON TECHNOLOGY'S INTERESTS.

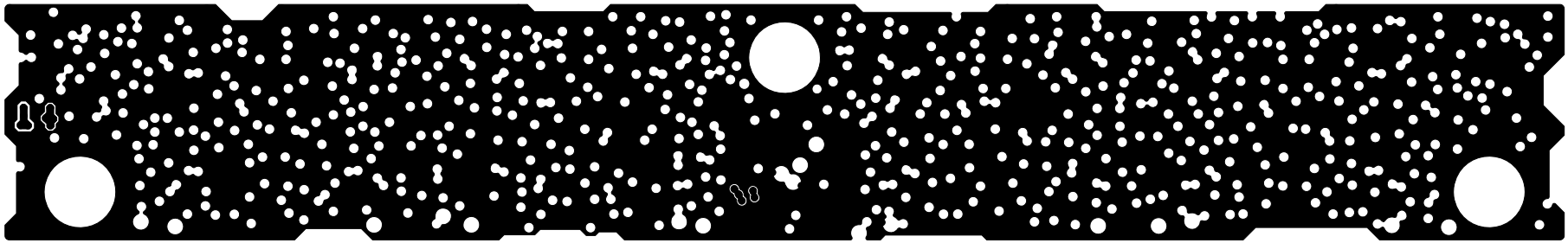

LAYER 9 GND9 PLANE 3957-32-01 REV B

CONFIDENTIALITY NOTE

THIS PRINT REMAINS THE PROPERTY OF MICRON TECHNOLOGY, INC. - ALL INFORMATION HEREIN IS CONFIDENTIAL - IT IS LOANED SUBJECT TO RETURN UPON DEMAND AND ON CONDITION THAT IT NOT BE COPIED OR USED IN ANY WAY DETRIMENTAL TO MICRON TECHNOLOGY'S INTERESTS.

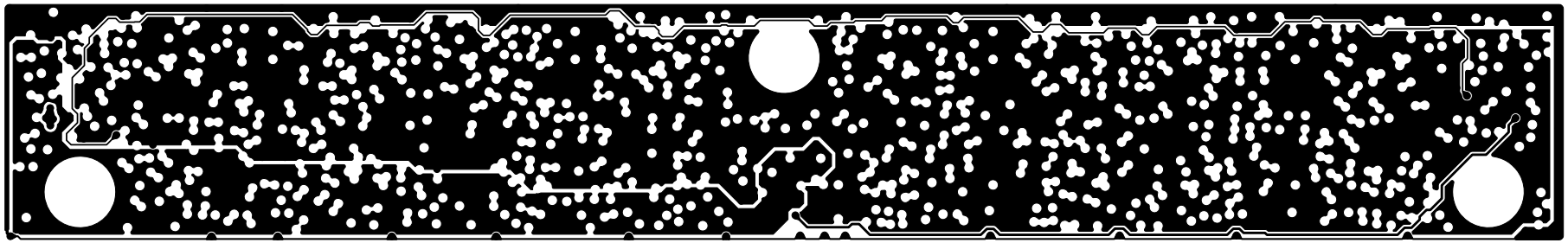

LAYER 10 VDD10 PLANE 3957-32-01 REV B

CONFIDENTIALITY NOTE

THIS PRINT REMAINS THE PROPERTY OF MICRON TECHNOLOGY, INC. - ALL INFORMATION HEREIN IS CONFIDENTIAL - IT IS LOANED SUBJECT TO RETURN UPON DEMAND AND ON CONDITION THAT IT NOT BE COPIED OR USED IN ANY WAY DETRIMENTAL TO MICRON TECHNOLOGY'S INTERESTS.

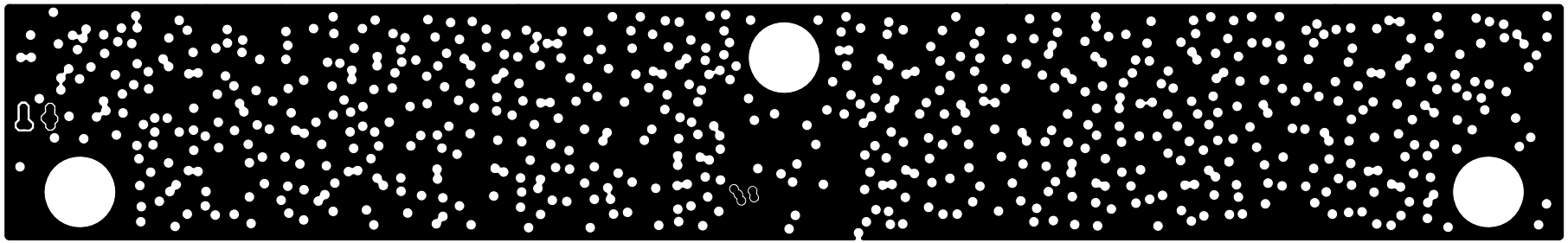

LAYER 11 GND11 PLANE 3957-32-01 REV B

CONFIDENTIALITY NOTE

THIS PRINT REMAINS THE PROPERTY OF MICRON TECHNOLOGY, INC. - ALL INFORMATION HEREIN IS CONFIDENTIAL - IT IS LOANED SUBJECT TO RETURN UPON DEMAND AND ON CONDITION THAT IT NOT BE COPIED OR USED IN ANY WAY DETRIMENTAL TO MICRON TECHNOLOGY'S INTERESTS.

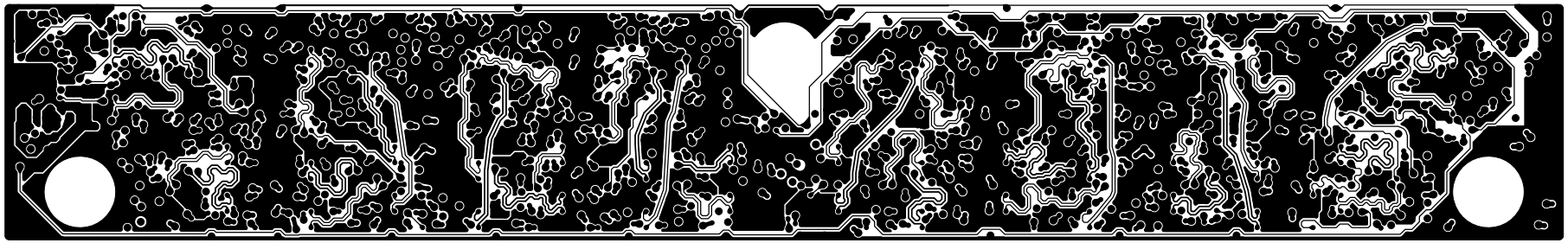

LAYER 12 S12 SIGNAL 3957-32-01 REV B

CONFIDENTIALITY NOTE

THIS PRINT REMAINS THE PROPERTY OF MICRON TECHNOLOGY, INC. - ALL INFORMATION HEREIN IS CONFIDENTIAL - IT IS LOANED SUBJECT TO RETURN UPON DEMAND AND ON CONDITION THAT IT NOT BE COPIED OR USED IN ANY WAY DETRIMENTAL TO MICRON TECHNOLOGY'S INTERESTS.

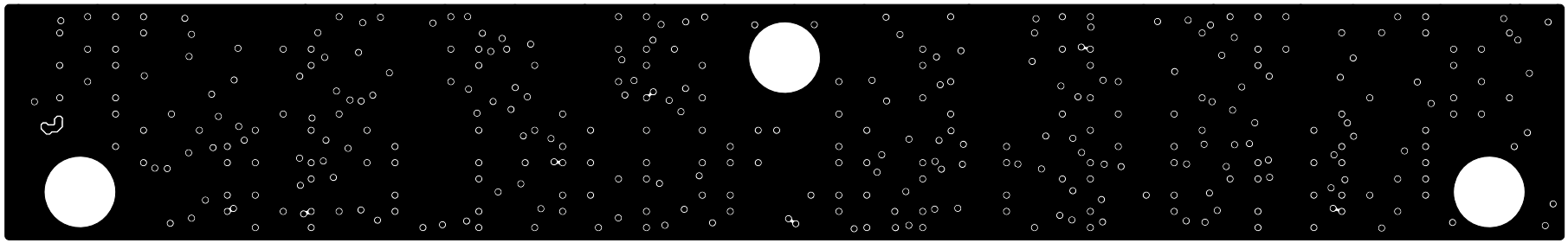

LAYER 13 GND13 PLANE 3957-32-01 REV B

CONFIDENTIALITY NOTE

THIS PRINT REMAINS THE PROPERTY OF MICRON TECHNOLOGY, INC. - ALL INFORMATION HEREIN IS CONFIDENTIAL - IT IS LOANED SUBJECT TO RETURN UPON DEMAND AND ON CONDITION THAT IT NOT BE COPIED OR USED IN ANY WAY DETRIMENTAL TO MICRON TECHNOLOGY'S INTERESTS.

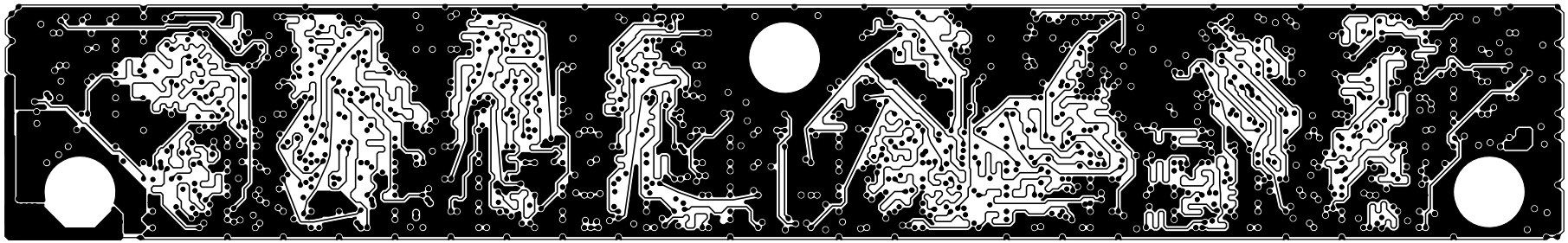

LAYER 14 S14 SIGNAL 3957-32-01 REV B

CONFIDENTIALITY NOTE

THIS PRINT REMAINS THE PROPERTY OF MICRON TECHNOLOGY, INC. - ALL INFORMATION HEREIN IS CONFIDENTIAL - IT IS LOANED SUBJECT TO RETURN UPON DEMAND AND ON CONDITION THAT IT NOT BE COPIED OR USED IN ANY WAY DETRIMENTAL TO MICRON TECHNOLOGY'S INTERESTS.

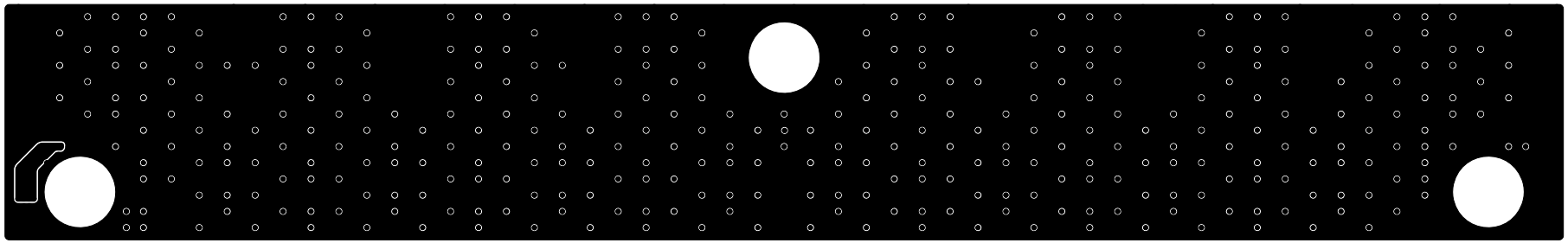

LAYER 15 GND15 PLANE 3957-32-01 REV B

CONFIDENTIALITY NOTE

THIS PRINT REMAINS THE PROPERTY OF MICRON TECHNOLOGY, INC. - ALL INFORMATION HEREIN IS CONFIDENTIAL - IT IS LOANED SUBJECT TO RETURN UPON DEMAND AND ON CONDITION THAT IT NOT BE COPIED OR USED IN ANY WAY DETRIMENTAL TO MICRON TECHNOLOGY'S INTERESTS.

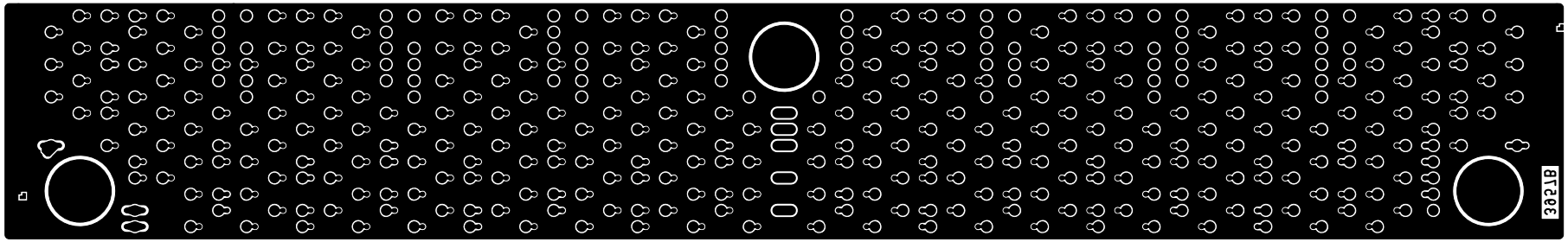

LAYER 16 SECONDARY SIDE 3957-32-01 REV B

CONFIDENTIALITY NOTE

THIS PRINT REMAINS THE PROPERTY OF MICRON TECHNOLOGY, INC. - ALL INFORMATION HEREIN IS CONFIDENTIAL - IT IS LOANED SUBJECT TO RETURN UPON DEMAND AND ON CONDITION THAT IT NOT BE COPIED OR USED IN ANY WAY DETRIMENTAL TO MICRON TECHNOLOGY'S INTERESTS.

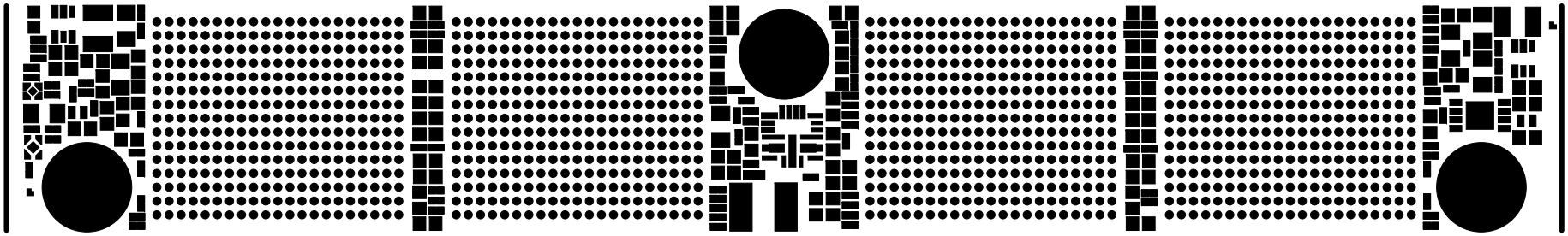

PRIMARY SOLDERMASK 3957-32-01 REV B

CONFIDENTIALITY NOTE

THIS PRINT REMAINS THE PROPERTY OF MICRON TECHNOLOGY, INC. - ALL INFORMATION HEREIN IS CONFIDENTIAL - IT IS LOANED SUBJECT TO RETURN UPON DEMAND AND ON CONDITION THAT IT NOT BE COPIED OR USED IN ANY WAY DETRIMENTAL TO MICRON TECHNOLOGY'S INTERESTS.

[redacted]

SECONDARY SOLDERMASK 3957-32-01 REV B

CONFIDENTIALITY NOTE

THIS PRINT REMAINS THE PROPERTY OF MICRON TECHNOLOGY, INC. - ALL INFORMATION HEREIN IS CONFIDENTIAL - IT IS LOANED SUBJECT TO RETURN UPON DEMAND AND ON CONDITION THAT IT NOT BE COPIED OR USED IN ANY WAY DETRIMENTAL TO MICRON TECHNOLOGY'S INTERESTS.

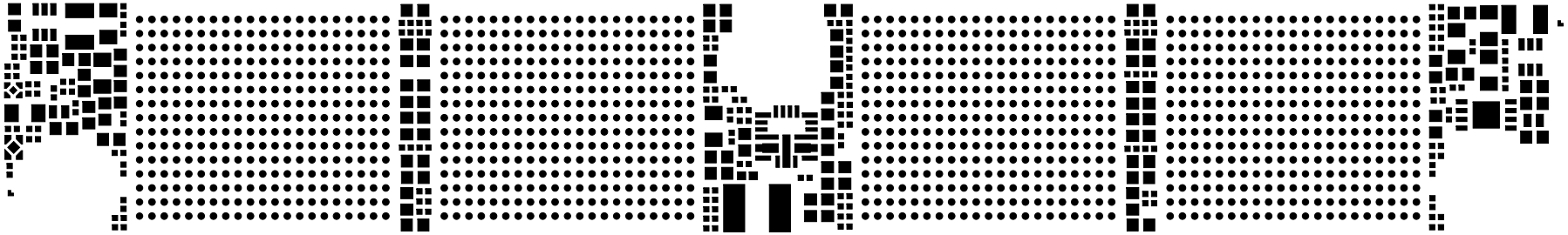

PRIMARY SOLDERPASTE 3957-32-01 REV B
VIEWED FROM SQUEEGEE SIDE

CONFIDENTIALITY NOTE

THIS PRINT REMAINS THE PROPERTY OF MICRON TECHNOLOGY, INC. - ALL INFORMATION HEREIN IS CONFIDENTIAL - IT IS LOANED SUBJECT TO RETURN UPON DEMAND AND ON CONDITION THAT IT NOT BE COPIED OR USED IN ANY WAY DETRIMENTAL TO MICRON TECHNOLOGY'S INTERESTS.

SECONDARY SOLDERPASTE 3957-32-01 REV B
VIEWED FROM SQUEEGEE SIDE

CONFIDENTIALITY NOTE

THIS PRINT REMAINS THE PROPERTY OF MICRON TECHNOLOGY, INC. - ALL INFORMATION HEREIN IS CONFIDENTIAL - IT IS LOANED SUBJECT TO RETURN UPON DEMAND AND ON CONDITION THAT IT NOT BE COPIED OR USED IN ANY WAY DETRIMENTAL TO MICRON TECHNOLOGY'S INTERESTS.

PRIMARY ENIG 3957-32-01 REV B

CONFIDENTIALITY NOTE

THIS PRINT REMAINS THE PROPERTY OF MICRON TECHNOLOGY, INC. - ALL INFORMATION HEREIN IS CONFIDENTIAL - IT IS LOANED SUBJECT TO RETURN UPON DEMAND AND ON CONDITION THAT IT NOT BE COPIED OR USED IN ANY WAY DETRIMENTAL TO MICRON TECHNOLOGY'S INTERESTS.

[redacted]

SECONDARY ENIG 3957-32-01 REV B

REV	DESCRIPTION	DATE
B	SEE MRCD FOR REVISION HISTORY	08/08/25

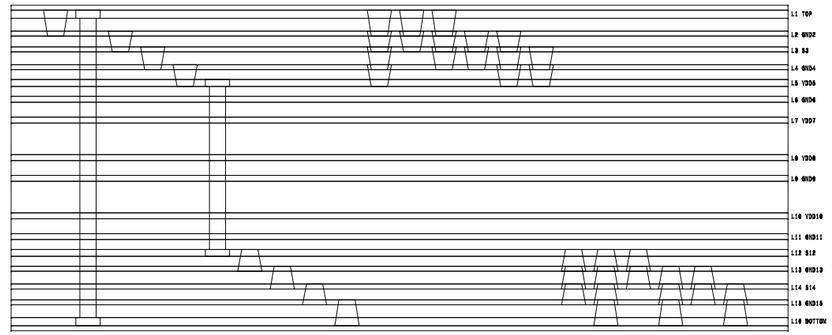

DESIGN CROSS SECTION CHART

DRILL CHART: TOP to BOTTOM					
ALL UNITS ARE IN MILLIMETERS					
FIGURE	FHS	FHS TOLERANCE	PLATED	NONSTANDARD	QTY
◈	3.600	+0.050/-0.050	NON-PLATED	-	3

DRILL CHART: TOP to GND2					
ALL UNITS ARE IN MILLIMETERS					
FIGURE	FHS	FHS TOLERANCE	PLATED	NONSTANDARD	QTY
◦	0.100	+0.000/-0.100	PLATED	LASER	1440

DRILL CHART: GND2 to S3					
ALL UNITS ARE IN MILLIMETERS					
FIGURE	FHS	FHS TOLERANCE	PLATED	NONSTANDARD	QTY
◦	0.100	+0.000/-0.100	PLATED	LASER	1666

DRILL CHART: S3 to GND4					
ALL UNITS ARE IN MILLIMETERS					
FIGURE	FHS	FHS TOLERANCE	PLATED	NONSTANDARD	QTY
◦	0.100	+0.000/-0.100	PLATED	LASER	1594

DRILL CHART: GND4 to VDD5					
ALL UNITS ARE IN MILLIMETERS					
FIGURE	FHS	FHS TOLERANCE	PLATED	NONSTANDARD	QTY
◦	0.100	+0.000/-0.100	PLATED	LASER	1191

DRILL CHART: VDD5 to S12					
ALL UNITS ARE IN MILLIMETERS					
FIGURE	FHS	FHS TOLERANCE	PLATED	NONSTANDARD	QTY
◇	0.200	+0.000/-0.200	PLATED	-	1092

DRILL CHART: S12 to GND13					
ALL UNITS ARE IN MILLIMETERS					
FIGURE	FHS	FHS TOLERANCE	PLATED	NONSTANDARD	QTY
•	0.100	+0.000/-0.100	PLATED	LASER	734

DRILL CHART: GND13 to S14					
ALL UNITS ARE IN MILLIMETERS					
FIGURE	FHS	FHS TOLERANCE	PLATED	NONSTANDARD	QTY
•	0.100	+0.000/-0.100	PLATED	LASER	1143
◦	0.100	+0.000/-0.100	PLATED	LASER	1

DRILL CHART: S14 to GND15					
ALL UNITS ARE IN MILLIMETERS					
FIGURE	FHS	FHS TOLERANCE	PLATED	NONSTANDARD	QTY
•	0.100	+0.000/-0.100	PLATED	LASER	1119
◦	0.100	+0.000/-0.100	PLATED	LASER	1

DRILL CHART: GND15 to BOTTOM					
ALL UNITS ARE IN MILLIMETERS					
FIGURE	FHS	FHS TOLERANCE	PLATED	NONSTANDARD	QTY
•	0.100	+0.000/-0.100	PLATED	LASER	948
◦	0.100	+0.000/-0.100	PLATED	LASER	1

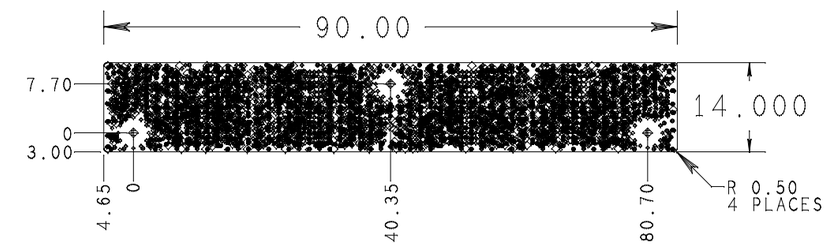

PRIMARY SIDE

NOTES:

1. ALL PRINTED CIRCUIT BOARDS SHALL BE FABRICATED IN ACCORDANCE WITH MICRON PRINTED CIRCUIT SPECIFICATION #46HJZT3HMHWW-797438086-4 LATEST REVISION.
2. OVERALL THICKNESS, INCLUDING PAD PLATING, SHALL BE 1.60mm +/-0.10mm MEASURED FROM METAL SURFACE TO METAL SURFACE AT A 3.60mm HOLE.
3. SURFACE FINISH TO BE OSP AND ENIG. PENIG AND SENIG AREA TO BE IMMERSION GOLD 0.05um MINIMUM OVER ELECTROLESS NICKEL 3.00um MINIMUM.
4. ALL MATERIAL MUST MEET MICRON'S HALOGEN-FREE REQUIREMENTS IN ACCORDANCE WITH MICRON SUPPLIER REQUIREMENTS STANDARD #ZN5YQVW54AFP-18-7841 LATEST REVISION.
5. OUTER LAYER LASER VIAS TO BE COPPER FILLED. SURFACE TO BE PLANAR WITHIN 25um. BOARDS MUST BE SUITABLE FOR VIA IN PAD TECHNOLOGY.
6. SOLDERMASK SHALL BE BLACK.
7. PCB MATERIAL SHALL BE DOOSAN DS-8502LC OR EMC EM-526.

CONFIDENTIALITY NOTE

THIS PRINT REMAINS THE PROPERTY OF MICRON TECHNOLOGY, INC. - ALL INFORMATION HEREIN IS CONFIDENTIAL - IT IS LOANED SUBJECT TO RETURN UPON DEMAND AND ON CONDITION THAT IT NOT BE COPIED OR USED IN ANY WAY DETRIMENTAL TO MICRON TECHNOLOGY'S INTERESTS.

ENGINEER: MSCHAUBLE

DESIGNER: DARINFREDERI

micron
8000 S. FEDERAL WAY
BOISE, IDAHO 83707
(208)368-4000

TOLERANCES:
DIMENSIONS ARE IN MM
UNLESS OTHERWISE SPECIFIED
.X = ±0.25mm
.XX = ±0.13mm
ANGLE = ±5 DEG

TITLE
FABRICATION DRAWING
LPDDR5 315 BALL SOCAMM2, REV 0.51

DRAWING NO. 3957-30-01

REV B

SIZE: B | SCALE: NTS | SHEET 1 OF 1

REV	DESCRIPTION	DATE
B	SEE MRCD FOR REVISION HISTORY	08/08/25

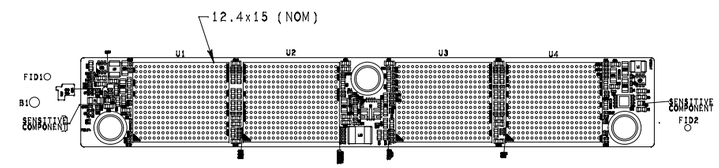

PRIMARY SIDE

NOTES:

1. PCAs SHALL BE MANUFACTURED IN ACCORDANCE WITH THE WORKMANSHIP CRITERIA OF IPC-A-610 "ACCEPTABILITY OF ELECTRONIC ASSEMBLIES", CLASS 2 REQUIREMENTS.
2. ASSEMBLY DRAWING SHOWS ALL POSSIBLE PART PLACEMENTS.

CONFIDENTIALITY NOTE

THIS PRINT REMAINS THE PROPERTY OF MICRON TECHNOLOGY, INC. - ALL INFORMATION HEREIN IS CONFIDENTIAL - IT IS LOANED SUBJECT TO RETURN UPON DEMAND AND ON CONDITION THAT IT NOT BE COPIED OR USED IN ANY WAY DETRIMENTAL TO MICRON TECHNOLOGY'S INTERESTS.

ENGINEER: MSCHAUBLE

DESIGNER: DARINFREDERI

micron

8000 S. FEDERAL WAY
BOISE, IDAHO 83707
(208)368-4000

TOLERANCES:
DIMENSIONS ARE IN MM
UNLESS OTHERWISE SPECIFIED
.X = ±0.25mm
.XX = ±0.13mm
ANGLE = ±5 DEG

TITLE
ASSEMBLY DRAWING
LPDDR5 315 BALL SOCAMM2, REV 0.51

DRAWING NO. 3957-40-01

REV B

SIZE: B | SCALE: NTS | SHEET 1 OF 2

REV	DESCRIPTION	DATE
B	SEE MRCD FOR REVISION HISTORY	08/08/25

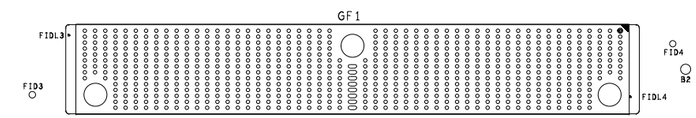

SECONDARY SIDE

CONFIDENTIALITY NOTE

THIS PRINT REMAINS THE PROPERTY OF MICRON TECHNOLOGY, INC. - ALL INFORMATION HEREIN IS CONFIDENTIAL - IT IS LOANED SUBJECT TO RETURN UPON DEMAND AND ON CONDITION THAT IT NOT BE COPIED OR USED IN ANY WAY DETRIMENTAL TO MICRON TECHNOLOGY'S INTERESTS.

ENGINEER: MSCHAUBLE

DESIGNER: DARINFREDERI

micron
8000 S. FEDERAL WAY
BOISE, IDAHO 83707
(208)368-4000

TOLERANCES:
DIMENSIONS ARE IN MM
UNLESS OTHERWISE SPECIFIED
.X = ±0.25mm
.XX = ±0.13mm
ANGLE = ±5 DEG

TITLE
ASSEMBLY DRAWING
LPDDR5 315 BALL SOCAMM2, REV 0.51

DRAWING NO. 3957-40-01

REV B

SIZE: B | SCALE: NTS | SHEET 2 OF 2

REV	DESCRIPTION	DSN	DATE	APP
B	SEE MRCD FOR REVISION HISTORY	TR	08/08/25	MS

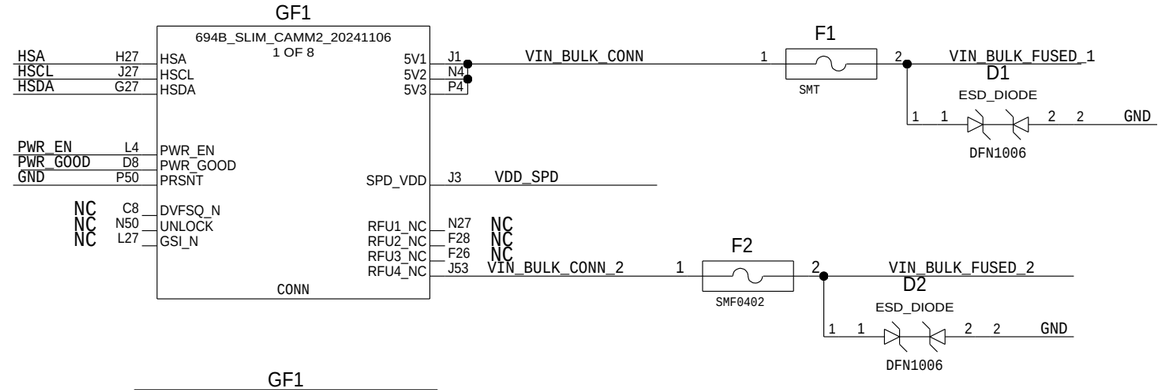

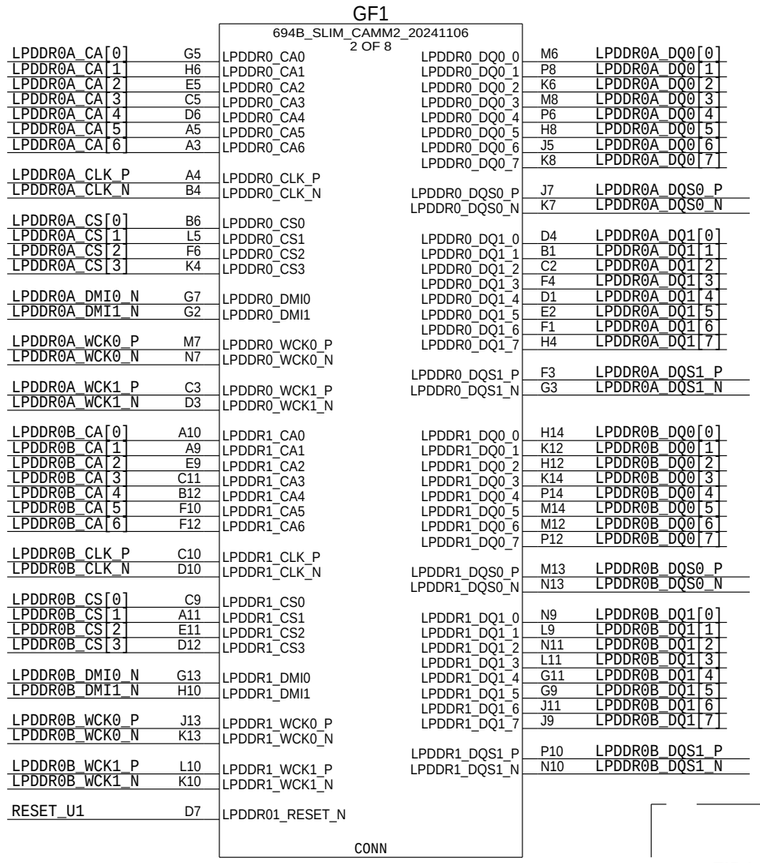

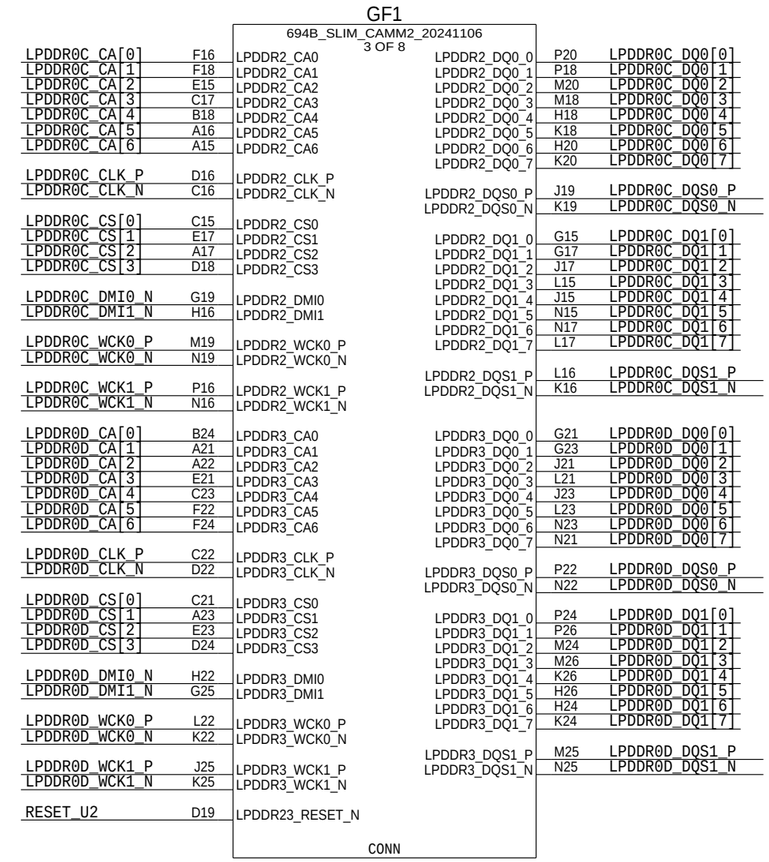

DO NOT PLACE - THESE ARE REF DES PLACE HOLDERS FOR FIDUCIALS

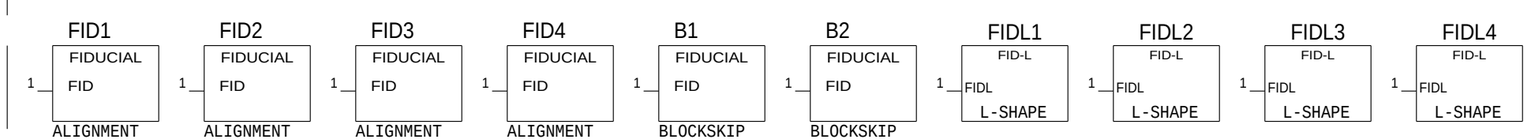

This schematic shows all possible part placements.
Refer to the SAP BOM for specific build configuration.

THIS PRINT REMAINS THE PROPERTY OF MICRON TECHNOLOGY, INC. - ALL INFORMATION HEREIN IS CONFIDENTIAL - IT IS LOANED SUBJECT TO RETURN UPON DEMAND AND ON CONDITION THAT IT NOT BE COPIED OR USED IN ANY WAY DETRIMENTAL TO MICRON TECHNOLOGY'S INTERESTS.

micron®
8000 S. FEDERAL WAY
BOISE, IDAHO 83707
(208)368-4000

DATE WRITTEN : Fri Aug 8 09:27:25 2025

TITLE
LPDDR5 315 BALL SOCAMM2, REV 0.51

DRAWING NO. 3957-20-01 REV: B

ENGINEER: mschauble
DATE: 08/08/25
PAGE: 1 OF 14

GF1

694B_SLIM_CAMM2_20241106
4 OF 8

LPDDR1A_CA[0]	F30	LPDDR4_CA0	LPDDR4_DQ0_0	N33	LPDDR1A_DQ0[0]
LPDDR1A_CA[1]	E33	LPDDR4_CA1	LPDDR4_DQ0_1	N31	LPDDR1A_DQ0[1]
LPDDR1A_CA[2]	F32	LPDDR4_CA2	LPDDR4_DQ0_2	L33	LPDDR1A_DQ0[2]
LPDDR1A_CA[3]	A33	LPDDR4_CA3	LPDDR4_DQ0_3	L31	LPDDR1A_DQ0[3]
LPDDR1A_CA[4]	C31	LPDDR4_CA4	LPDDR4_DQ0_4	G31	LPDDR1A_DQ0[4]
LPDDR1A_CA[5]	A32	LPDDR4_CA5	LPDDR4_DQ0_5	J31	LPDDR1A_DQ0[5]
LPDDR1A_CA[6]	B30	LPDDR4_CA6	LPDDR4_DQ0_6	G33	LPDDR1A_DQ0[6]
			LPDDR4_DQ0_7	J33	LPDDR1A_DQ0[7]
LPDDR1A_CLK_P	C32	LPDDR4_CLK_P			
LPDDR1A_CLK_N	D32	LPDDR4_CLK_N	LPDDR4_DQS0_P	K32	LPDDR1A_DQS0_P
			LPDDR4_DQS0_N	L32	LPDDR1A_DQS0_N
LPDDR1A_CS[0]	A31	LPDDR4_CS0			
LPDDR1A_CS[1]	D30	LPDDR4_CS1	LPDDR4_DQ1_0	K28	LPDDR1A_DQ1[0]
LPDDR1A_CS[2]	C33	LPDDR4_CS2	LPDDR4_DQ1_1	H30	LPDDR1A_DQ1[1]
LPDDR1A_CS[3]	E31	LPDDR4_CS3	LPDDR4_DQ1_2	K30	LPDDR1A_DQ1[2]
			LPDDR4_DQ1_3	M28	LPDDR1A_DQ1[3]
LPDDR1A_DMI0_N	H32	LPDDR4_DMI0	LPDDR4_DQ1_4	H28	LPDDR1A_DQ1[4]
LPDDR1A_DMI1_N	G29	LPDDR4_DMI1	LPDDR4_DQ1_5	P28	LPDDR1A_DQ1[5]
			LPDDR4_DQ1_6	P30	LPDDR1A_DQ1[6]
LPDDR1A_WCK0_P	N32	LPDDR4_WCK0_P	LPDDR4_DQ1_7	M30	LPDDR1A_DQ1[7]
LPDDR1A_WCK0_N	P32	LPDDR4_WCK0_N			
			LPDDR4_DQS1_P	K29	LPDDR1A_DQS1_P
LPDDR1A_WCK1_P	N29	LPDDR4_WCK1_P	LPDDR4_DQS1_N	J29	LPDDR1A_DQS1_N
LPDDR1A_WCK1_N	M29	LPDDR4_WCK1_N			
LPDDR1B_CA[0]	F38	LPDDR5_CA0	LPDDR5_DQ0_0	J39	LPDDR1B_DQ0[0]
LPDDR1B_CA[1]	B36	LPDDR5_CA1	LPDDR5_DQ0_1	J37	LPDDR1B_DQ0[1]
LPDDR1B_CA[2]	A38	LPDDR5_CA2	LPDDR5_DQ0_2	G37	LPDDR1B_DQ0[2]
LPDDR1B_CA[3]	F36	LPDDR5_CA3	LPDDR5_DQ0_3	G39	LPDDR1B_DQ0[3]
LPDDR1B_CA[4]	A39	LPDDR5_CA4	LPDDR5_DQ0_4	N39	LPDDR1B_DQ0[4]
LPDDR1B_CA[5]	C37	LPDDR5_CA5	LPDDR5_DQ0_5	L39	LPDDR1B_DQ0[5]
LPDDR1B_CA[6]	E39	LPDDR5_CA6	LPDDR5_DQ0_6	L37	LPDDR1B_DQ0[6]
			LPDDR5_DQ0_7	N37	LPDDR1B_DQ0[7]
LPDDR1B_CLK_P	D38	LPDDR5_CLK_P			
LPDDR1B_CLK_N	C38	LPDDR5_CLK_N	LPDDR5_DQS0_P	N38	LPDDR1B_DQS0_P
			LPDDR5_DQS0_N	P38	LPDDR1B_DQS0_N
LPDDR1B_CS[0]	D36	LPDDR5_CS0			
LPDDR1B_CS[1]	A37	LPDDR5_CS1	LPDDR5_DQ1_0	P34	LPDDR1B_DQ1[0]
LPDDR1B_CS[2]	E37	LPDDR5_CS2	LPDDR5_DQ1_1	M34	LPDDR1B_DQ1[1]
LPDDR1B_CS[3]	C39	LPDDR5_CS3	LPDDR5_DQ1_2	P36	LPDDR1B_DQ1[2]
			LPDDR5_DQ1_3	M36	LPDDR1B_DQ1[3]
LPDDR1B_DMI0_N	H38	LPDDR5_DMI0	LPDDR5_DQ1_4	H36	LPDDR1B_DQ1[4]
LPDDR1B_DMI1_N	G35	LPDDR5_DMI1	LPDDR5_DQ1_5	H34	LPDDR1B_DQ1[5]
			LPDDR5_DQ1_6	K36	LPDDR1B_DQ1[6]
LPDDR1B_WCK0_P	K38	LPDDR5_WCK0_P	LPDDR5_DQ1_7	K34	LPDDR1B_DQ1[7]
LPDDR1B_WCK0_N	L38	LPDDR5_WCK0_N			
			LPDDR5_DQS1_P	N35	LPDDR1B_DQS1_P
LPDDR1B_WCK1_P	K35	LPDDR5_WCK1_P	LPDDR5_DQS1_N	M35	LPDDR1B_DQS1_N
LPDDR1B_WCK1_N	J35	LPDDR5_WCK1_N			
RESET_U3	E34	LPDDR45_RESET_N			

CONN

GF1

694B_SLIM_CAMM2_20241106
5 OF 8

LPDDR1C_CA[0]	F42	LPDDR6_CA0	LPDDR6_DQ0_0	P40	LPDDR1C_DQ0[0]
LPDDR1C_CA[1]	F44	LPDDR6_CA1	LPDDR6_DQ0_1	M40	LPDDR1C_DQ0[1]
LPDDR1C_CA[2]	C43	LPDDR6_CA2	LPDDR6_DQ0_2	M42	LPDDR1C_DQ0[2]
LPDDR1C_CA[3]	E45	LPDDR6_CA3	LPDDR6_DQ0_3	K42	LPDDR1C_DQ0[3]
LPDDR1C_CA[4]	B42	LPDDR6_CA4	LPDDR6_DQ0_4	K40	LPDDR1C_DQ0[4]
LPDDR1C_CA[5]	A45	LPDDR6_CA5	LPDDR6_DQ0_5	H40	LPDDR1C_DQ0[5]
LPDDR1C_CA[6]	A44	LPDDR6_CA6	LPDDR6_DQ0_6	H42	LPDDR1C_DQ0[6]
			LPDDR6_DQ0_7	P42	LPDDR1C_DQ0[7]
LPDDR1C_CLK_P	C44	LPDDR6_CLK_P			
LPDDR1C_CLK_N	D44	LPDDR6_CLK_N	LPDDR6_DQS0_P	K41	LPDDR1C_DQS0_P
			LPDDR6_DQS0_N	J41	LPDDR1C_DQS0_N
LPDDR1C_CS[0]	A43	LPDDR6_CS0			
LPDDR1C_CS[1]	D42	LPDDR6_CS1	LPDDR6_DQ1_0	G45	LPDDR1C_DQ1[0]
LPDDR1C_CS[2]	C45	LPDDR6_CS2	LPDDR6_DQ1_1	G43	LPDDR1C_DQ1[1]
LPDDR1C_CS[3]	E43	LPDDR6_CS3	LPDDR6_DQ1_2	J45	LPDDR1C_DQ1[2]
			LPDDR6_DQ1_3	L45	LPDDR1C_DQ1[3]
LPDDR1C_DMI0_N	G41	LPDDR6_DMI0	LPDDR6_DQ1_4	J43	LPDDR1C_DQ1[4]
LPDDR1C_DMI1_N	H44	LPDDR6_DMI1	LPDDR6_DQ1_5	L43	LPDDR1C_DQ1[5]
			LPDDR6_DQ1_6	N43	LPDDR1C_DQ1[6]
LPDDR1C_WCK0_P	N41	LPDDR6_WCK0_P	LPDDR6_DQ1_7	N45	LPDDR1C_DQ1[7]
LPDDR1C_WCK0_N	M41	LPDDR6_WCK0_N			
			LPDDR6_DQS1_P	K44	LPDDR1C_DQS1_P
LPDDR1C_WCK1_P	N44	LPDDR6_WCK1_P	LPDDR6_DQS1_N	L44	LPDDR1C_DQS1_N
LPDDR1C_WCK1_N	P44	LPDDR6_WCK1_N			
LPDDR1D_CA[0]	A51	LPDDR7_CA0	LPDDR7_DQ0_0	D50	LPDDR1D_DQ0[0]
LPDDR1D_CA[1]	A49	LPDDR7_CA1	LPDDR7_DQ0_1	B53	LPDDR1D_DQ0[1]
LPDDR1D_CA[2]	D48	LPDDR7_CA2	LPDDR7_DQ0_2	C52	LPDDR1D_DQ0[2]
LPDDR1D_CA[3]	C49	LPDDR7_CA3	LPDDR7_DQ0_3	F50	LPDDR1D_DQ0[3]
LPDDR1D_CA[4]	E49	LPDDR7_CA4	LPDDR7_DQ0_4	D53	LPDDR1D_DQ0[4]
LPDDR1D_CA[5]	H48	LPDDR7_CA5	LPDDR7_DQ0_5	F53	LPDDR1D_DQ0[5]
LPDDR1D_CA[6]	G49	LPDDR7_CA6	LPDDR7_DQ0_6	G52	LPDDR1D_DQ0[6]
			LPDDR7_DQ0_7	H50	LPDDR1D_DQ0[7]
LPDDR1D_CLK_P	B50	LPDDR7_CLK_P			
LPDDR1D_CLK_N	A50	LPDDR7_CLK_N	LPDDR7_DQS0_P	F51	LPDDR1D_DQS0_P
			LPDDR7_DQS0_N	G51	LPDDR1D_DQS0_N
LPDDR1D_CS[0]	L49	LPDDR7_CS0			
LPDDR1D_CS[1]	F48	LPDDR7_CS1	LPDDR7_DQ1_0	P48	LPDDR1D_DQ1[0]
LPDDR1D_CS[2]	J49	LPDDR7_CS2	LPDDR7_DQ1_1	N49	LPDDR1D_DQ1[1]
LPDDR1D_CS[3]	B48	LPDDR7_CS3	LPDDR7_DQ1_2	P46	LPDDR1D_DQ1[2]
			LPDDR7_DQ1_3	M48	LPDDR1D_DQ1[3]
LPDDR1D_DMI0_N	E52	LPDDR7_DMI0	LPDDR7_DQ1_4	K48	LPDDR1D_DQ1[4]
LPDDR1D_DMI1_N	G47	LPDDR7_DMI1	LPDDR7_DQ1_5	H46	LPDDR1D_DQ1[5]
			LPDDR7_DQ1_6	K46	LPDDR1D_DQ1[6]
LPDDR1D_WCK0_P	C51	LPDDR7_WCK0_P	LPDDR7_DQ1_7	M46	LPDDR1D_DQ1[7]
LPDDR1D_WCK0_N	D51	LPDDR7_WCK0_N			
			LPDDR7_DQS1_P	N47	LPDDR1D_DQS1_P
LPDDR1D_WCK1_P	K47	LPDDR7_WCK1_P	LPDDR7_DQS1_N	M47	LPDDR1D_DQS1_N
LPDDR1D_WCK1_N	J47	LPDDR7_WCK1_N			
RESET_U4	E47	LPDDR67_RESET_N			

CONN

DATE WRITTEN : Fri Aug 8 09:27:24 2025

TITLE LPDDR5 315 BALL SOCAMM2, REV 0.51		ENGINEER: mschauble
		DATE: 08/08/25
DRAWING NO. 3957-20-01	REV: B	PAGE: 2 OF 14

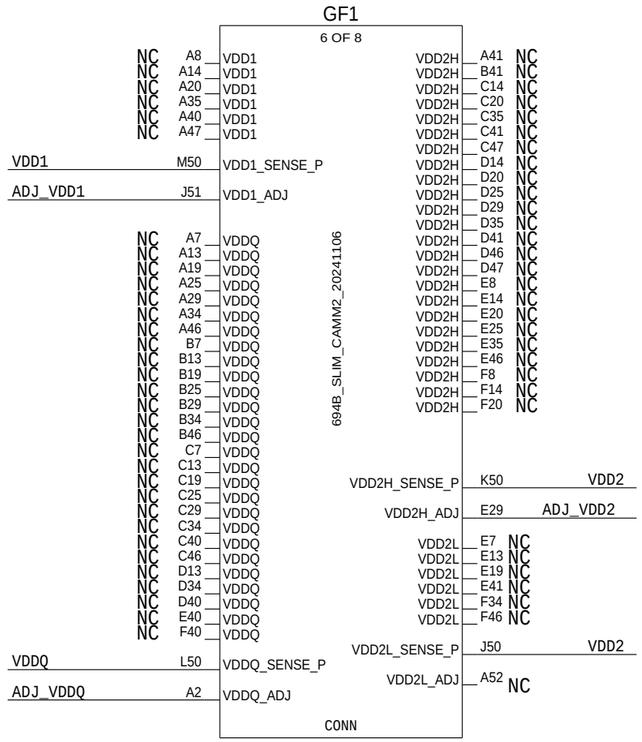

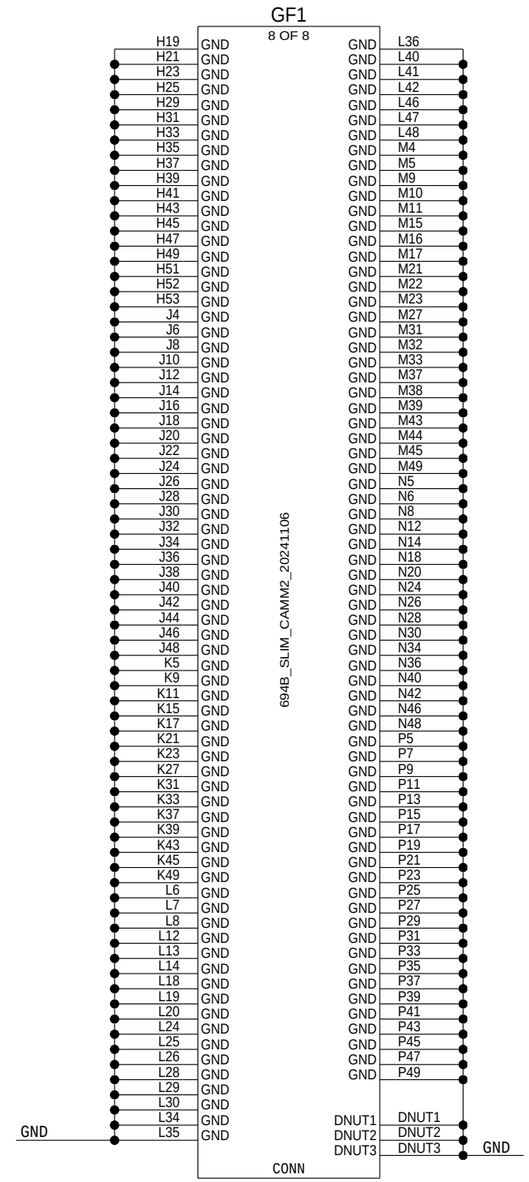

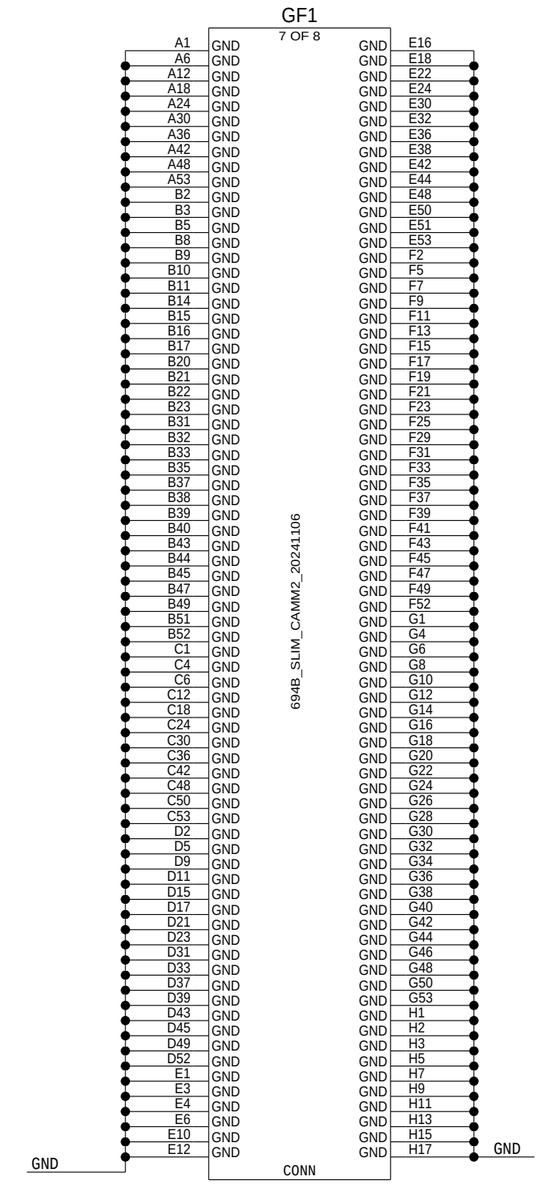

TITLE LPDDR5 315 BALL SOCAMM2, REV 0.51	ENGINEER: mschauble
	DATE: 08/08/25
DRAWING NO. 3957-20-01 — REV: B	PAGE: 3 OF 14

DATE WRITTEN : Fri Aug 8 09:27:26 2025

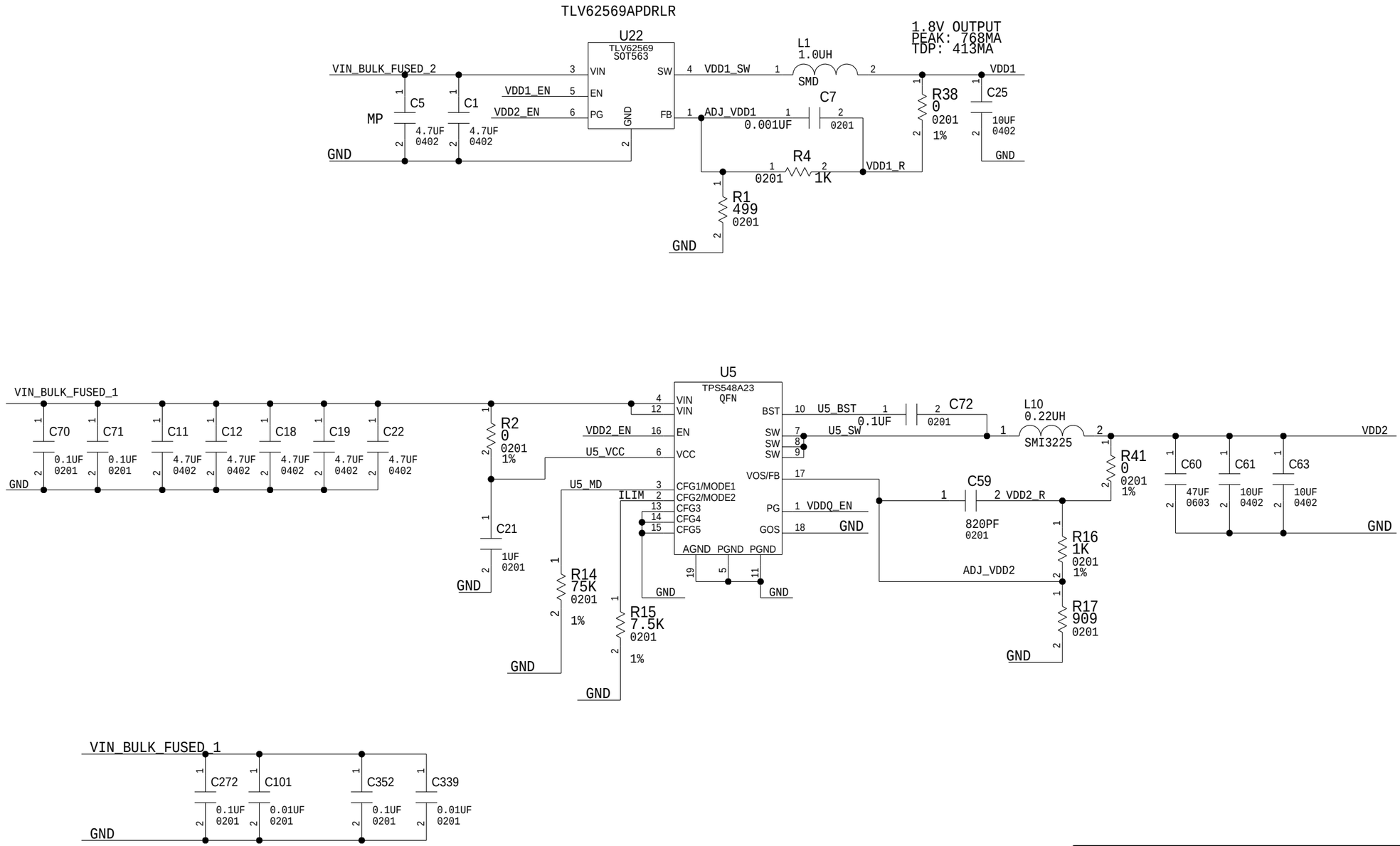

TITLE LPDDR5 315 BALL SOCAMM2, REV 0.51	ENGINEER: mschauble
	DATE: 08/08/25
DRAWING NO. 3957-20-01	REV: B
	PAGE: 4 OF 14

DATE WRITTEN : Fri Aug 8 09:27:27 2025

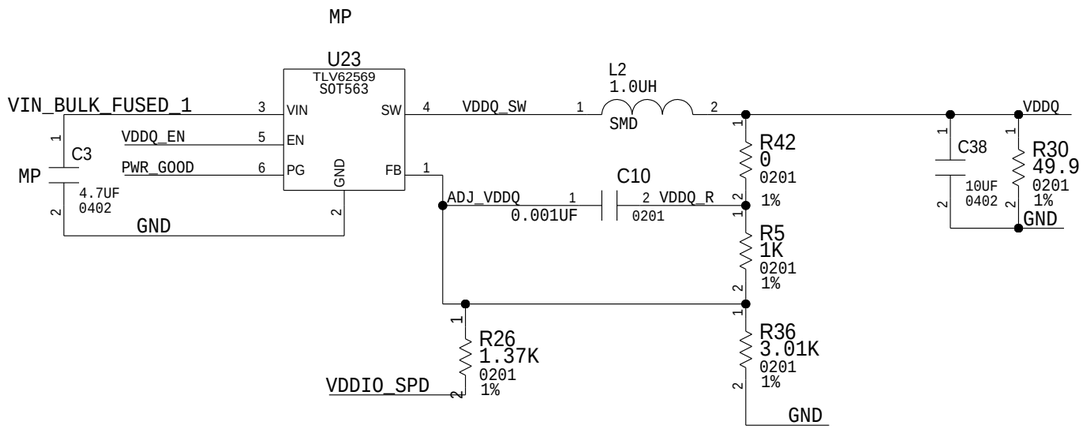

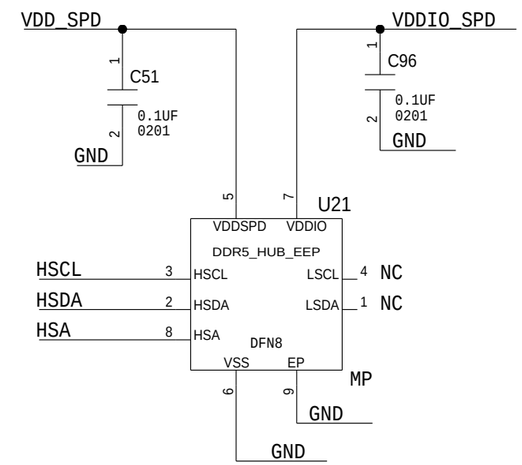

DATE WRITTEN : Fri Aug 8 09:27:29 2025

TITLE LPDDR5 315 BALL SOCAMM2, REV 0.51		ENGINEER: mschauble
		DATE: 08/08/25
DRAWING NO. 3957-20-01	REV: B	PAGE: 5 OF 14

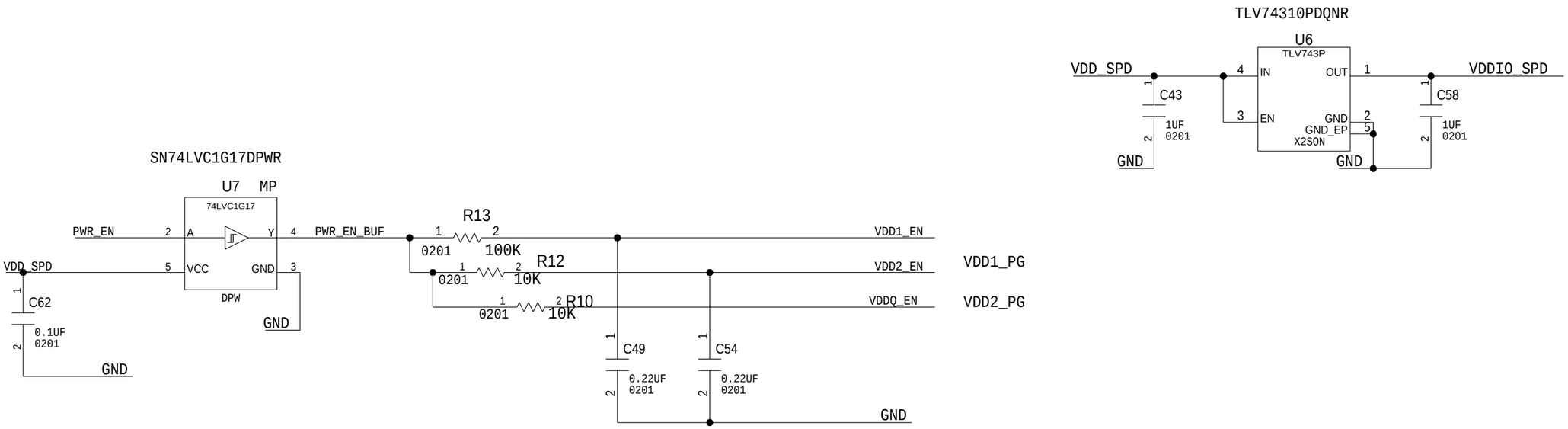

TITLE LPDDR5 315 BALL SOCAMM2, REV 0.51		ENGINEER: mschauble
		DATE: 08/08/25
DRAWING NO. 3957-20-01	REV: B	PAGE: 6 OF 14

DATE WRITTEN : Fri Aug 8 09:27:28 2025

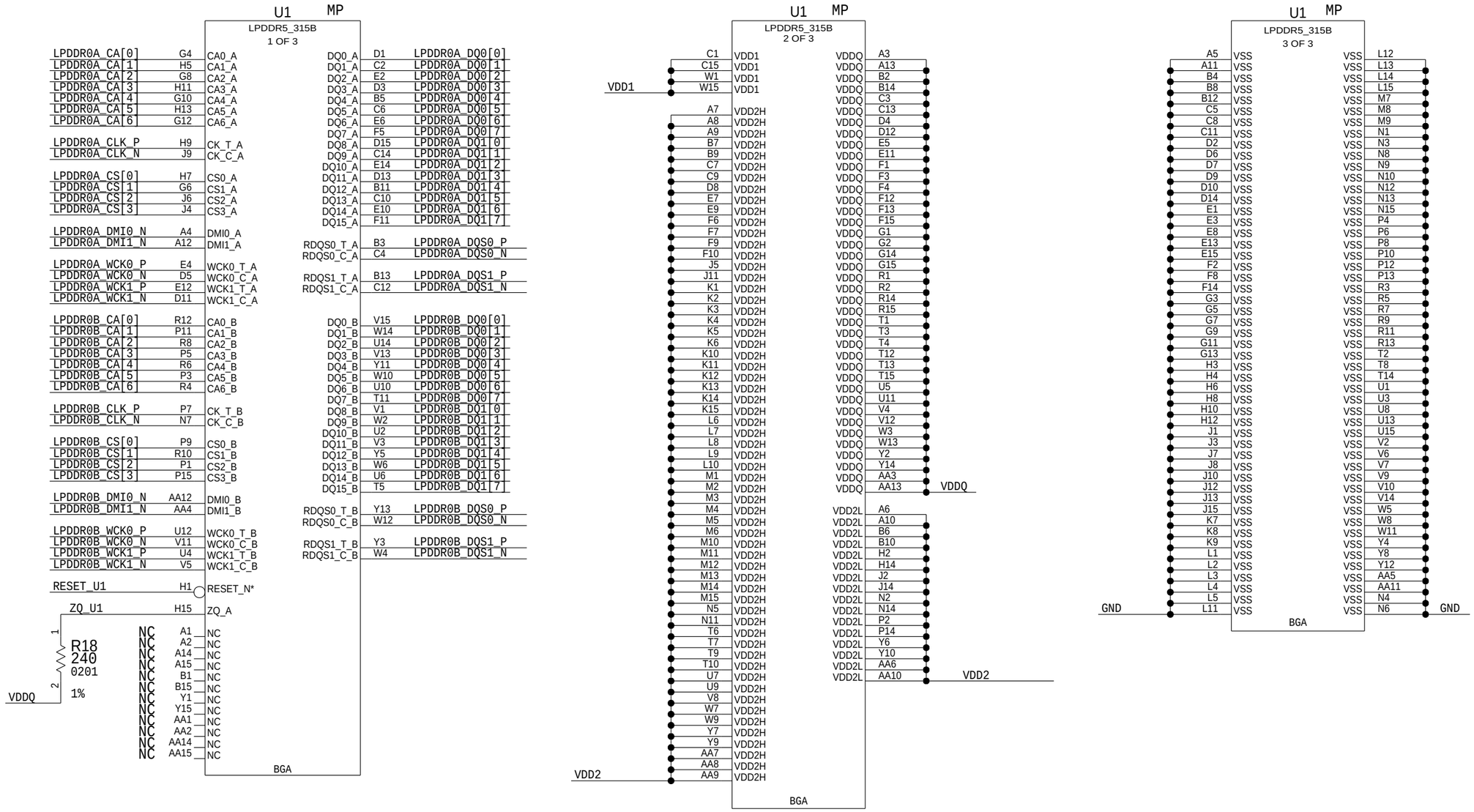

TITLE LPDDR5 315 BALL SOCAMM2, REV 0.51	ENGINEER: mschauble
	DATE: 08/08/25
DRAWING NO. 3957-20-01	REV: B
	PAGE: 7 OF 14

DATE WRITTEN : Thu Aug 7 12:03:54 2025

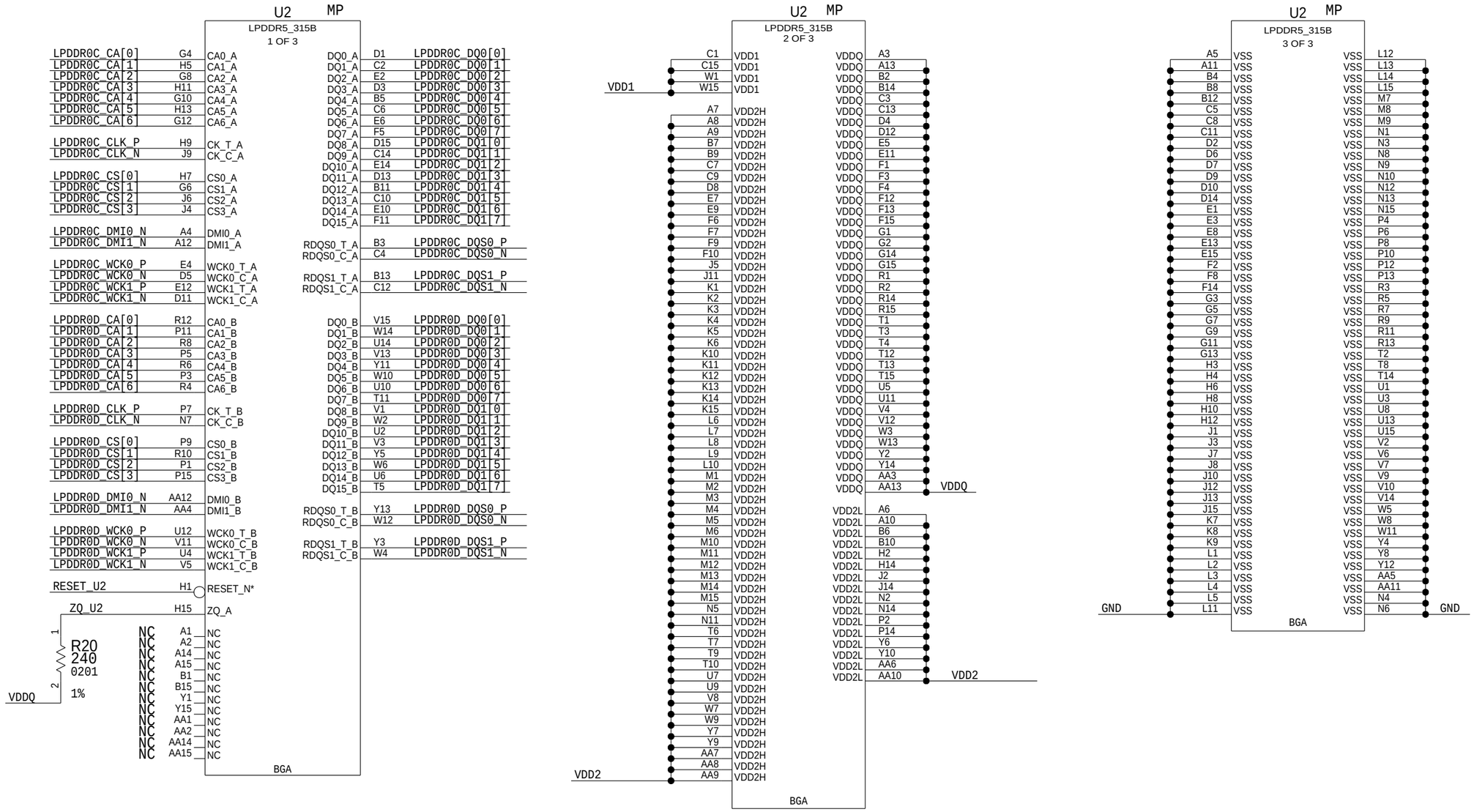

TITLE LPDDR5 315 BALL SOCAMM2, REV 0.51	ENGINEER: mschauble
	DATE: 08/08/25
DRAWING NO. 3957-20-01	REV: B
	PAGE: 8 OF 14

DATE WRITTEN : Fri Aug 8 09:27:30 2025

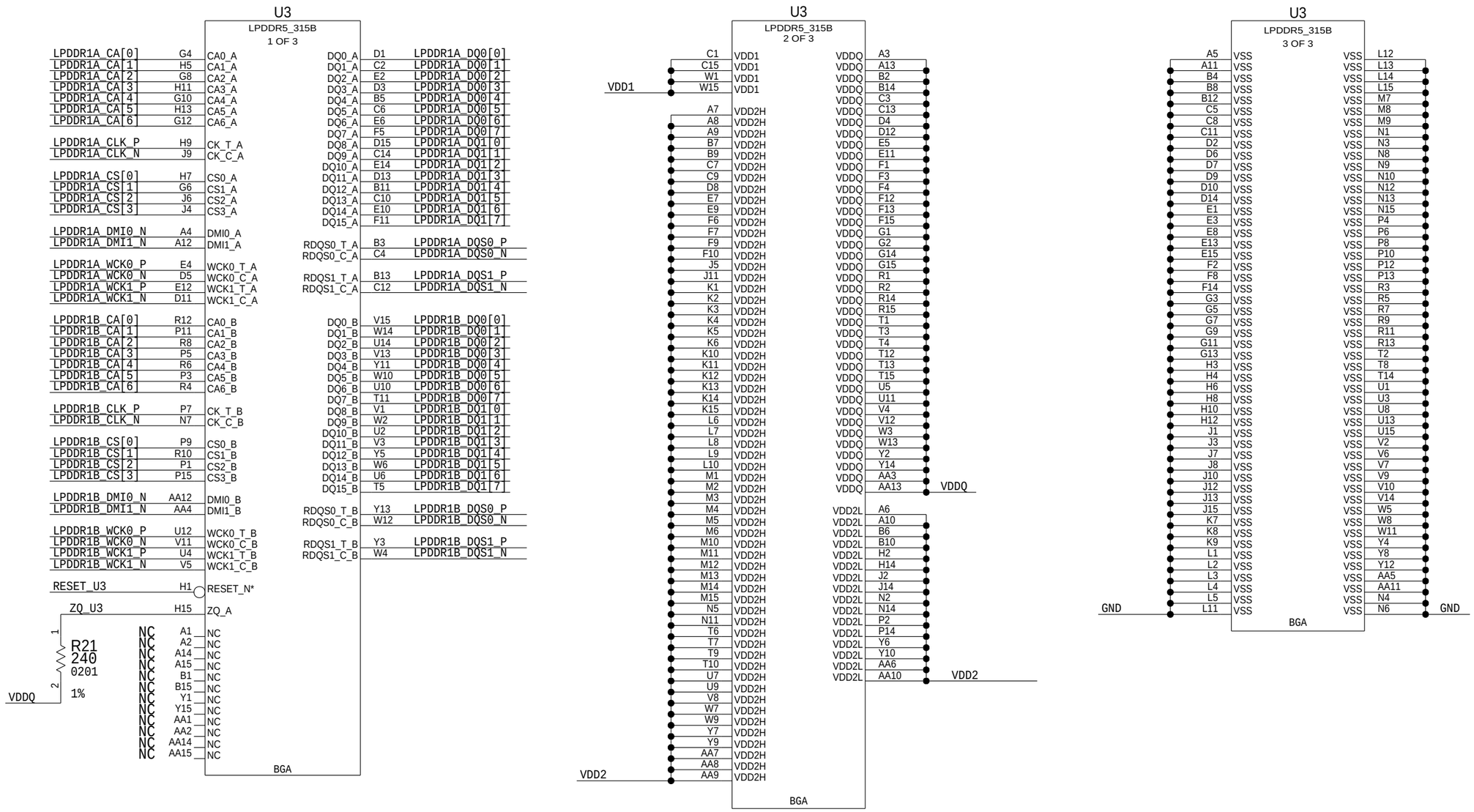

TITLE LPDDR5 315 BALL SOCAMM2, REV 0.51	ENGINEER: mschauble
	DATE: 08/08/25
DRAWING NO. 3957-20-01	REV: B
	PAGE: 9 OF 14

DATE WRITTEN : Fri Aug 8 09:27:31 2025

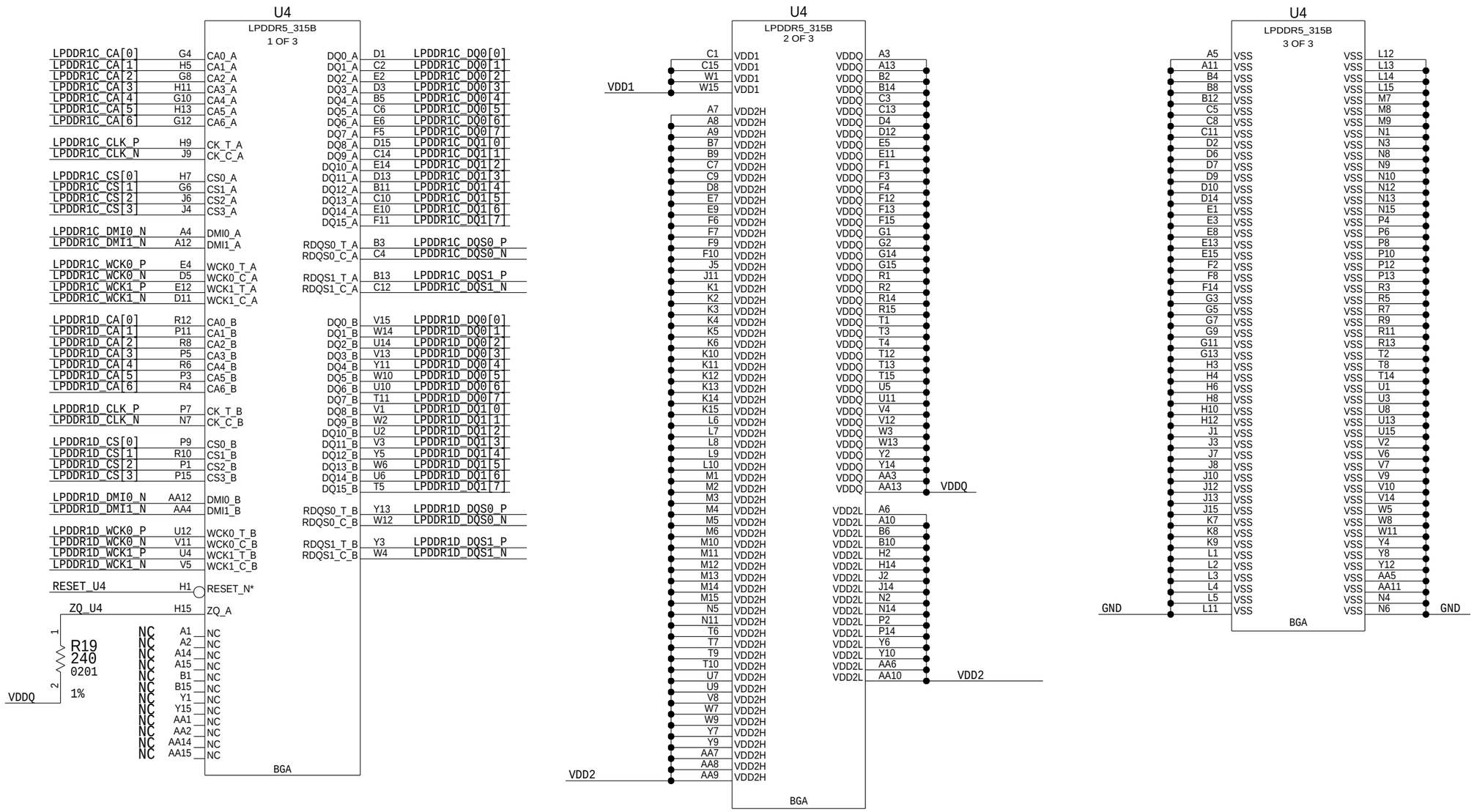

TITLE LPDDR5 315 BALL SOCAMM2, REV 0.51	ENGINEER: mschauble
	DATE: 08/08/25
DRAWING NO. 3957-20-01 — REV: B	PAGE: 10 OF 14

DATE WRITTEN : Fri Aug 8 09:27:32 2025

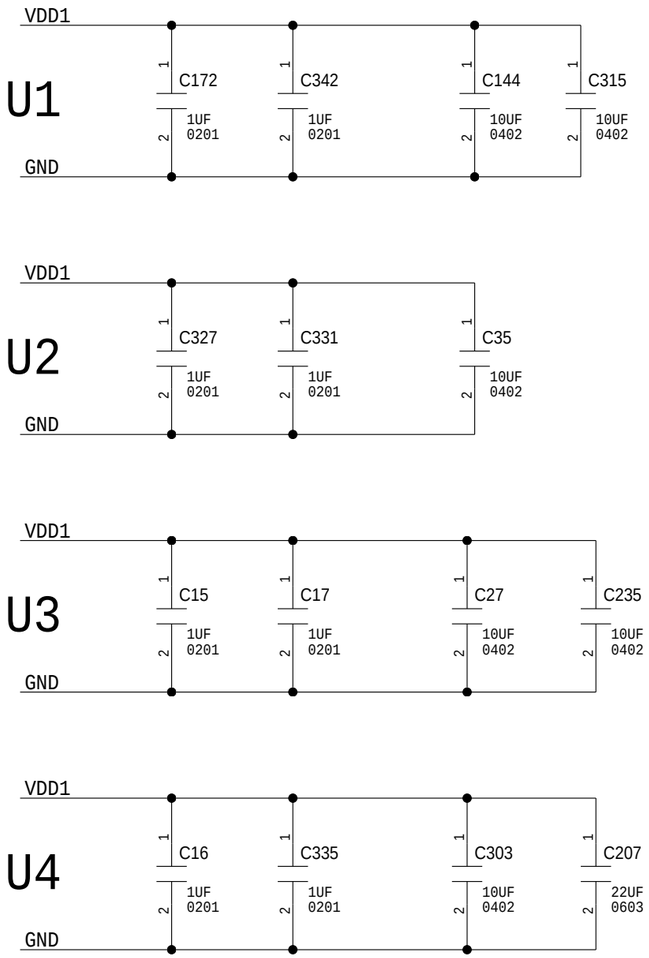

DATE WRITTEN : Fri Aug 8 09:27:34 2025

TITLE LPDDR5 315 BALL SOCAMM2, REV 0.51		ENGINEER: mschauble
		DATE: 08/08/25
DRAWING NO. 3957-20-01	REV: B	PAGE: 11 OF 14

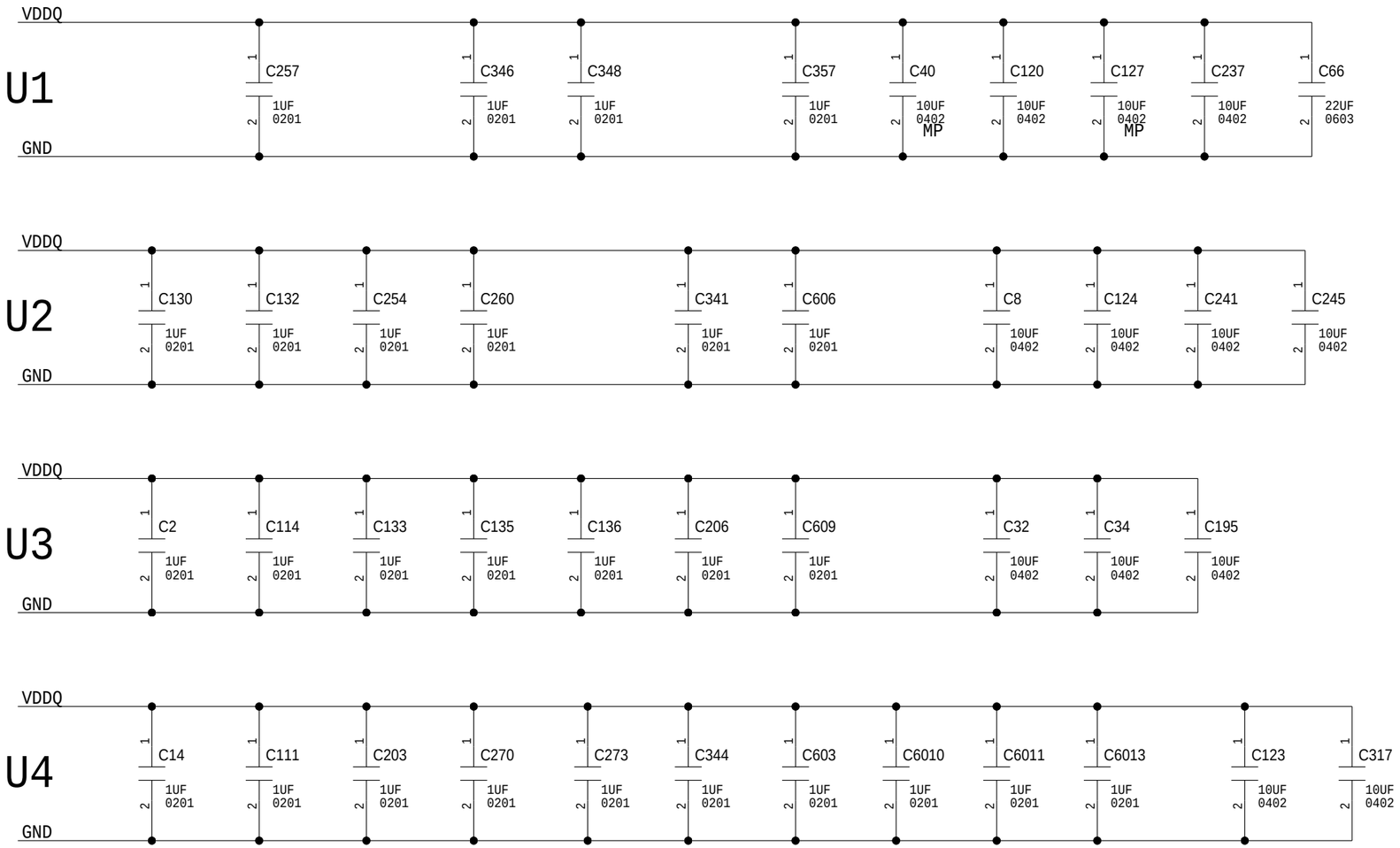

DATE WRITTEN : Fri Aug 8 09:27:35 2025

TITLE LPDDR5 315 BALL SOCAMM2, REV 0.51		ENGINEER: mschauble
		DATE: 08/08/25
DRAWING NO. 3957-20-01	REV: B	PAGE: 12 OF 14

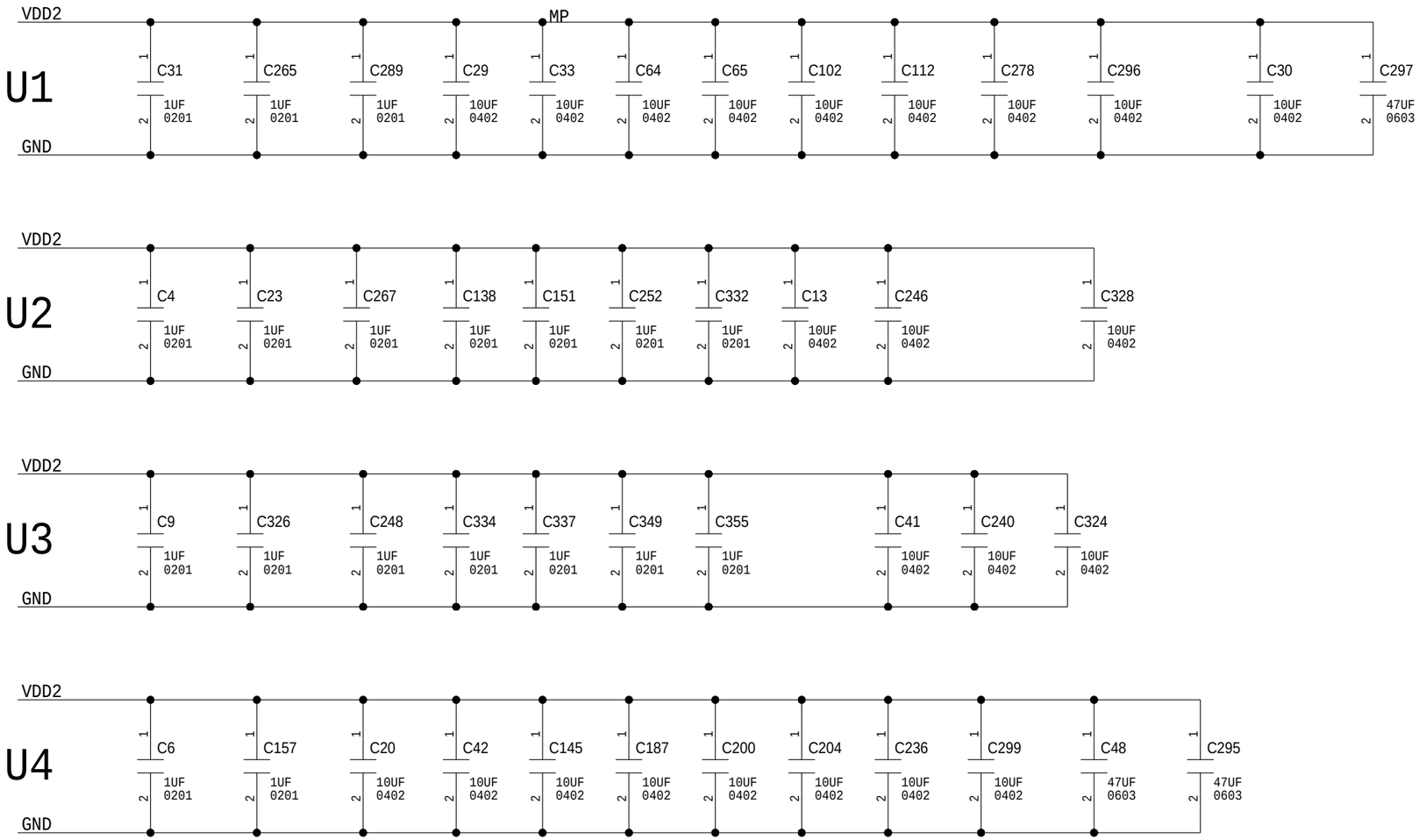

TITLE LPDDR5 315 BALL SOCAMM2, REV 0.51		ENGINEER: mschauble
		DATE: 08/08/25
DRAWING NO. 3957-20-01	REV: B	PAGE: 13 OF 14

DATE WRITTEN : Fri Aug 8 09:27:36 2025

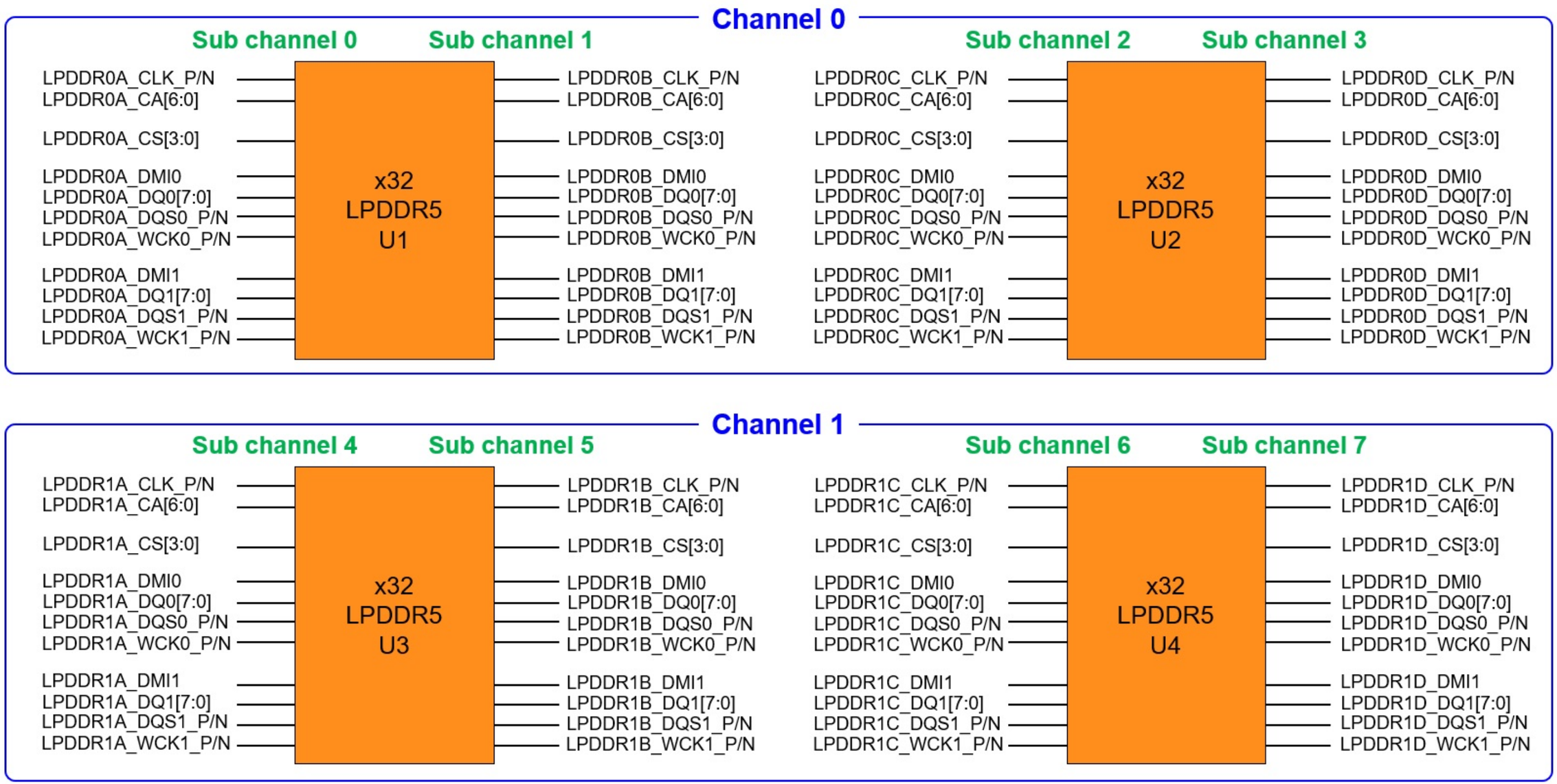

TITLE LPDDR5 315 BALL SOCAMM2, REV 0.51		ENGINEER: mschauble
		DATE: 08/08/25
DRAWING NO. 3957-20-01	REV: B	PAGE: 14 OF 14

DATE WRITTEN : Tue Sep 5 15:07:12 2023

UNLESS OTHERWISE NOTED	
1	THIS DRAWING IS FOR PANELIZATION STEP AND REPEAT ONLY. ANY FEATURES NOT DIMENSIONED ON THIS DRAWING MAY OR MAY NOT REFLECT THE EXACT SIZE, SHAPE AND FORM OF THE INDIVIDUAL PCB'S. THE FABRICATION DRAWING MUST BE USED TO REFERENCE FEATURES OF THE INDIVIDUAL PCB'S.
2	ALL DIMENSIONING AND TOLERANCING TO BE INTERPRETED IN ACCORDANCE WITH ASME Y14.5-2009
3	BLOCK-SKIP FIDUCIAL (1.57MM) IDENTIFIED WITH REF DES OF B ON EACH INSTANCE

BLOCK-SKIP FIDUCIAL
1.57 DIAMETER

1.50 SQUARE
FIDUCIAL TO BE PLACED
ON PRIMARY SIDE ONLY
SOLDERMASK CLEARANCE 0.45
BEYOND THE PAD

SQ_FID DETAIL

NOT TO SCALE
(SIMILAR 2 PLCS)

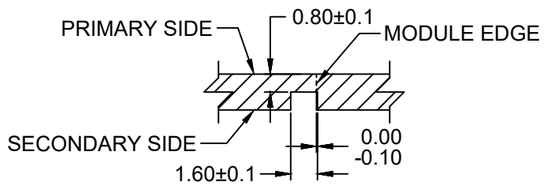

STEP CUT PROFILE DETAIL

NOT TO SCALE
(TYP)

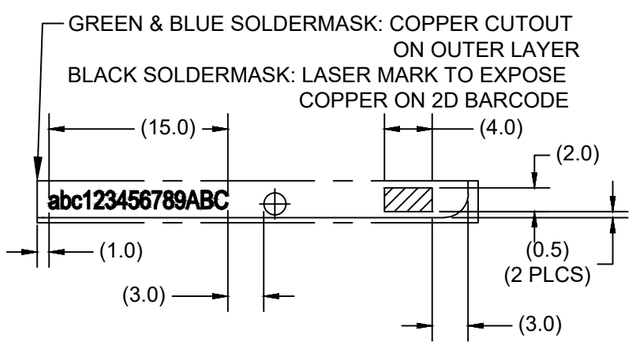

PCB ID & 2D BARCODE LOCATION DETAIL

NOT TO SCALE
(SIMILAR 2 PLCS)

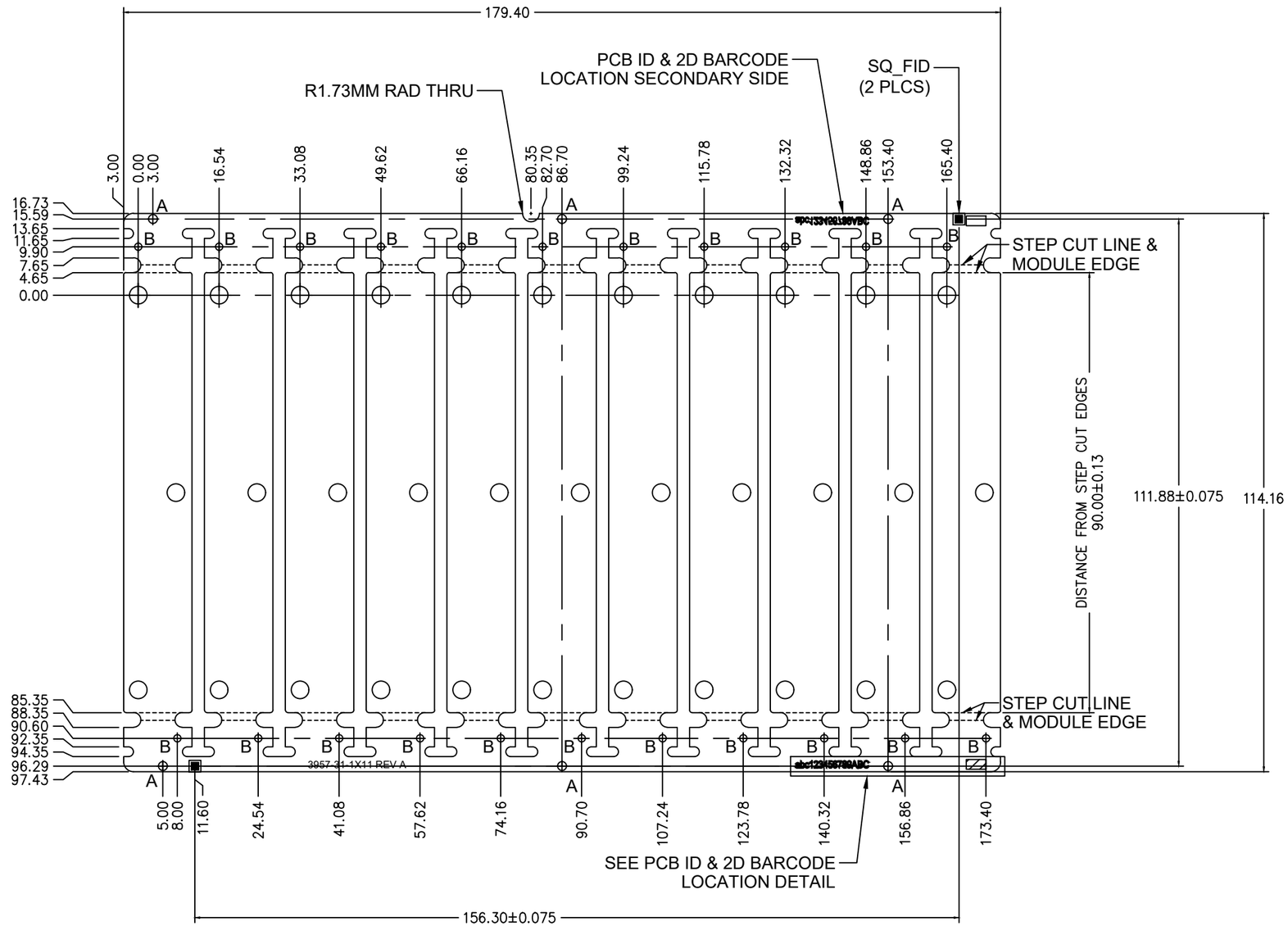

PRIMARY SIDE

UNLESS OTHERWISE SPECIFIED DIMENSIONS
ARE IN MILLIMETERS TOLERANCES ARE:

.X ± 0.3
.XX ± 0.13
ANGLE ± 5.0

PANEL ARRAY
ROUTED 3957
90.00X14.00 MM

micron TECHNOLOGY, INC.
8000 S. Federal Way
PO Box 6
Boise, ID 83707-0006
(208) 368-4000 FAX: (208) 368-3381

HOLE DESIGNATION CHART

SYM	HOLE DESCRIPTION	PLCS
A	1.85 +/- 0.05 [0.073 +/-0.002 in] NOT PLATED DIA THRU	6
B	1.50 +/- 0.05 [0.059 +/-0.002 in] NOT PLATED DIA THRU	22

REVISIONS

REV	DESCRIPTION	BY	DATE

REV	DESCRIPTION	BY	DATE
A	SEE MRCD FOR DETAILS	MDS	06/13/25

THIS PRINT REMAINS THE PROPERTY OF MICRON TECHNOLOGY INC. - INFORMATION HEREON IS CONFIDENTIAL - IT IS LOANED SUBJECT TO RETURN UPON DEMAND AND IN CONDITION TO MICRON TECHNOLOGY'S INTEREST

2023, MICRON TECHNOLOGY, INC.

ARRAY NO. 3957-31-1X11
REV A

ARRAY TEMPLATE USED:
90X14MM_20240926_11UP_SHT1

SCALE: 1:1
SHEET 1 OF 1

Template Revision 54 | Micron confidential | Note: Micron's acceptance of the stack up constitutes an implied agreement between Micron and the supplier that the stated materials and targets will not change. If a change is desired, a new stack up must be submitted and agreed upon. | ECN# 301106473 | Micron confidential

3957B Stack up and Impedance

Project Num	Overall Design Rev	Artwork Rev	Fab Drawing Rev
3957	B	B	B
Export	3957-10-01-B	3957-32-01-B	3957-30-01-B
Stackup Check	Layer Count	Board thickness	Thickness tol
	16	1.6	0.1

Via Structure								
Inner Layer Structure					Outer Layer Structure			
Laser	Laser	Laser	Laser	Buried	Laser	Blind	Thru	Back-Drill
2 to 3	3 to 4	4 to 5	5 to 6	5 to 12	1 to 2	1 to 3	1 to 16	8 to 18
14 to 15	13 to 14	12 to 13	11 to 12	5 to 12	15 to 16	14 to 16		
YES	YES	YES	NO	YES	YES	NO	NO	NO
Stacked					VIP			
YES	YES	YES	NO	NO	YES	NO	NO	NO

Supplier Name		Mtl_Supplie	Model	Prepreg	Foil type	Mtl_Type
Internal Part #		Laminate				Mid-Tg HF
UL type #			Series	Model	Foil wt.	
Cu Foil						
Via Plugging Ink				Hardener	Color	Finish	Coating
Solder Mask				Mid Tg Halogen-Free	Tg Halogen-Fr	Tg Halogen	Mid Tg Halogen-Free

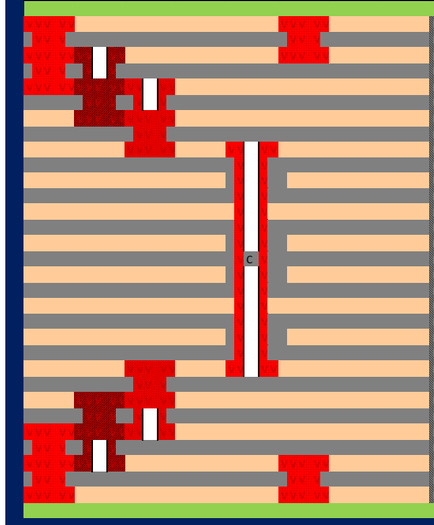

Layer	Description	Micron Recommended Thickness (µm)	Dk@ 1Ghz	Cu density	Supplier Proposal After Press Thickness	Layer Type	Glass Type	Glass Ply #	Dk @ 2Ghz	Df @ 2Ghz
		1.597			0.000					
-		25	4							
1	TOP	41				Plated Copper Top				
*		65	3.7			Prepreg				
2	GND2	25				Plated Copper Top				
*		55	3.55			Prepreg				
3	S3	25				Plated Copper Top				
*		65	3.55			Prepreg				
4	GND4	25				Plated Copper Top				
*		50	3.8			Prepreg				
5	Split	35				Plated Copper Top				
*		50	3.8			Prepreg				
6	GND6	30				Copper foil				
*		75	3.7			Core				
7	VDD7	30				Copper foil				
*		160	3.5			Prepreg				
8	VDD8	30				Copper foil				
enter		75	3.7			Core				
9	GND9	30				Copper foil				
*		160	3.5			Prepreg				
10	VDD	30				Copper foil				
*		75	3.7			Core				
11	GND11	30				Copper foil				
*		50	3.8			Prepreg				
12	S12	35				Plated Copper Bottom				
*		50	3.8			Prepreg				
13	GND13	25				Plated Copper Bottom				
*		65	3.55			Prepreg				
14	Signal	25				Plated Copper Bottom				
*		55	3.55			Prepreg				
15	GND	25				Plated Copper Bottom				
*	DIELECTRIC	65	3.7			Prepreg				
16	Signal	41				Plated Copper Bottom				
-	SOLDERMASK	25	4.1							

Layer	Single Ended Impedance: Micron Design Trace Width	Micron Design (Space)	Supplier Proposal Trace Width	Supplier Proposal (Space)	Micron Design Ref Plane 1	Micron Design Ref Plane 2	Micron Design Zo (spec)	Micron Design ± Tol	Supplier Simulated Zo	Supplier ± Tol	Coupon test required
1	100					2	50	± 10%		± 10%	YES
2	Plane 2										
3	80				2	4	40	± 10%		± 10%	YES
4	Plane 4										
5	60				4	6	40	± 10%		± 10%	YES
6	Plane 6										
7	140				6	8	40	± 10%		± 10%	YES
8	Plane 8										
9	Plane 9										
10	140				9	11	40	± 10%		± 10%	YES
11	Plane 11										
12	60				11	13	40	± 10%		± 10%	YES
13	Plane 13										
14	80				13	15	40	± 10%		± 10%	YES
15	Plane 15										
16	160				15		40	± 10%		± 10%	YES

Layer	Differential Impedance: Micron Design Trace Width	Micron Design (Space)	Supplier Proposal Trace Width	Supplier Proposal (Space)	Micron Design Ref Plane 1	Micron Design Ref Plane 2	Micron Design Zo (spec)	Micron Design ± Tol	Supplier Simulated Zo	Supplier ± Tol	Coupon test required
1	Plane 1										
2	Plane 2										
3	85	100			2	4	75	± 15%		± 15%	YES
	110	100			2	4	65	± 15%		± 15%	YES
4	Plane 4										
5	85	100					65	± 15%		± 15%	YES
	65	100					75	± 15%		± 15%	YES
6	Plane 6										
8	Plane 8										
9	Plane 9										
11	Plane 11										
12	85	100			11	13	65	± 15%		± 15%	YES
	65	100			11	13	75	± 15%		± 15%	YES
13	Plane 13										
15	Plane 15										
16	230	700			15		65	± 15%		± 15%	YES
	180	750			15		75	± 15%		± 15%	YES

Stackup Notes:

Notes