WAVEFORMS

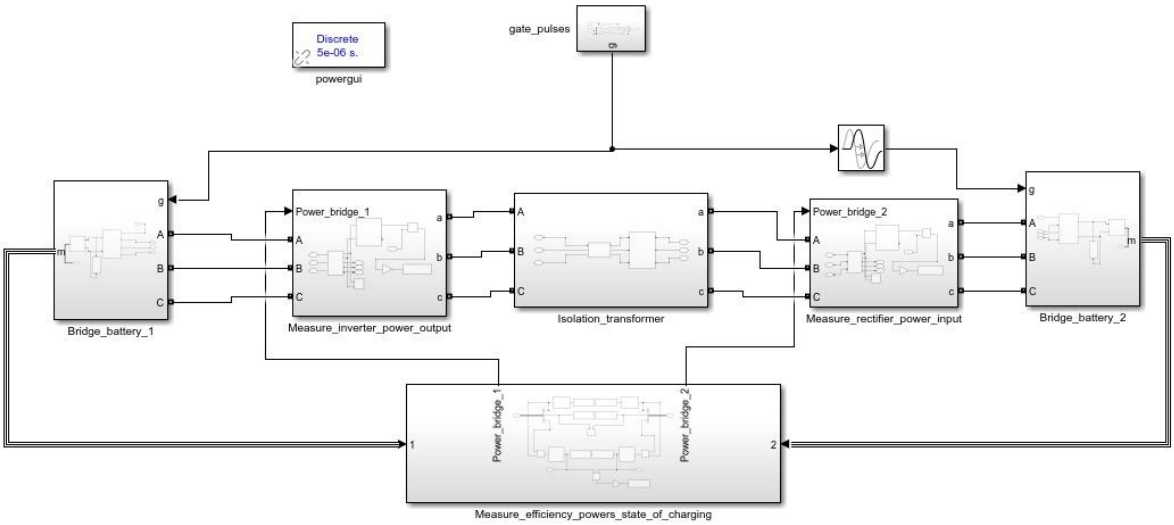

Fig1: Simulink Model for Forward Charging.

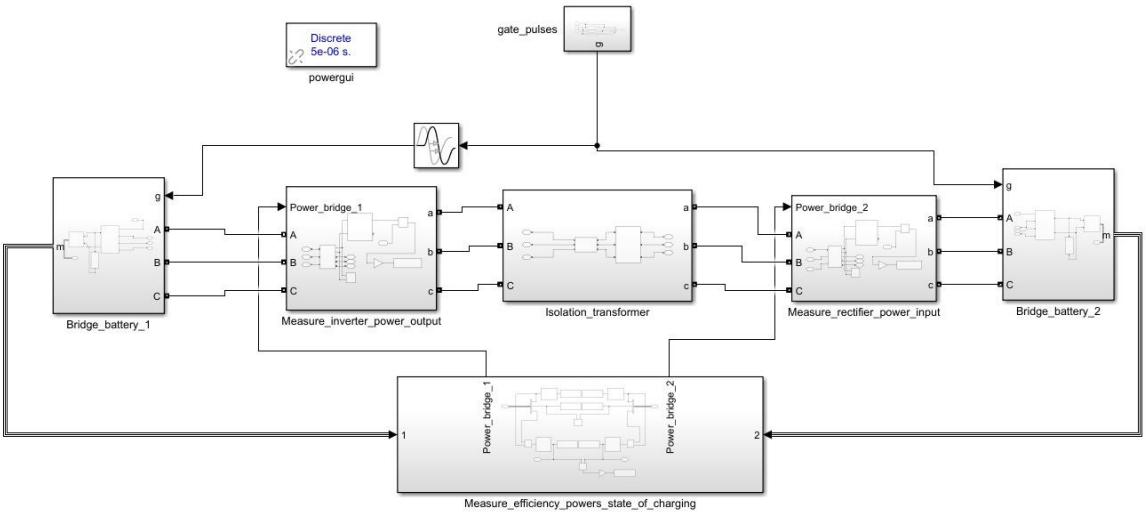

Fig2: Simulink Model for Reverse charging

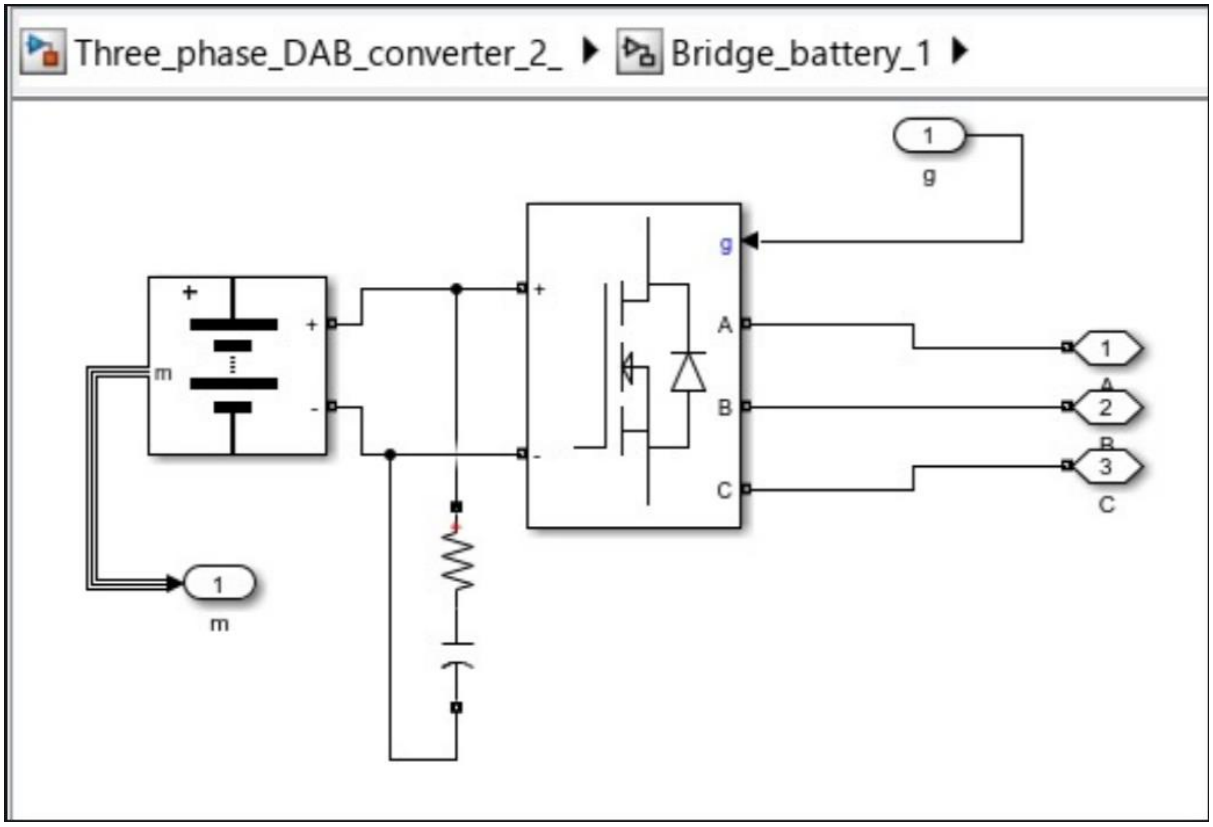

Fig3: Simulink Model subsystem of bridge battery1

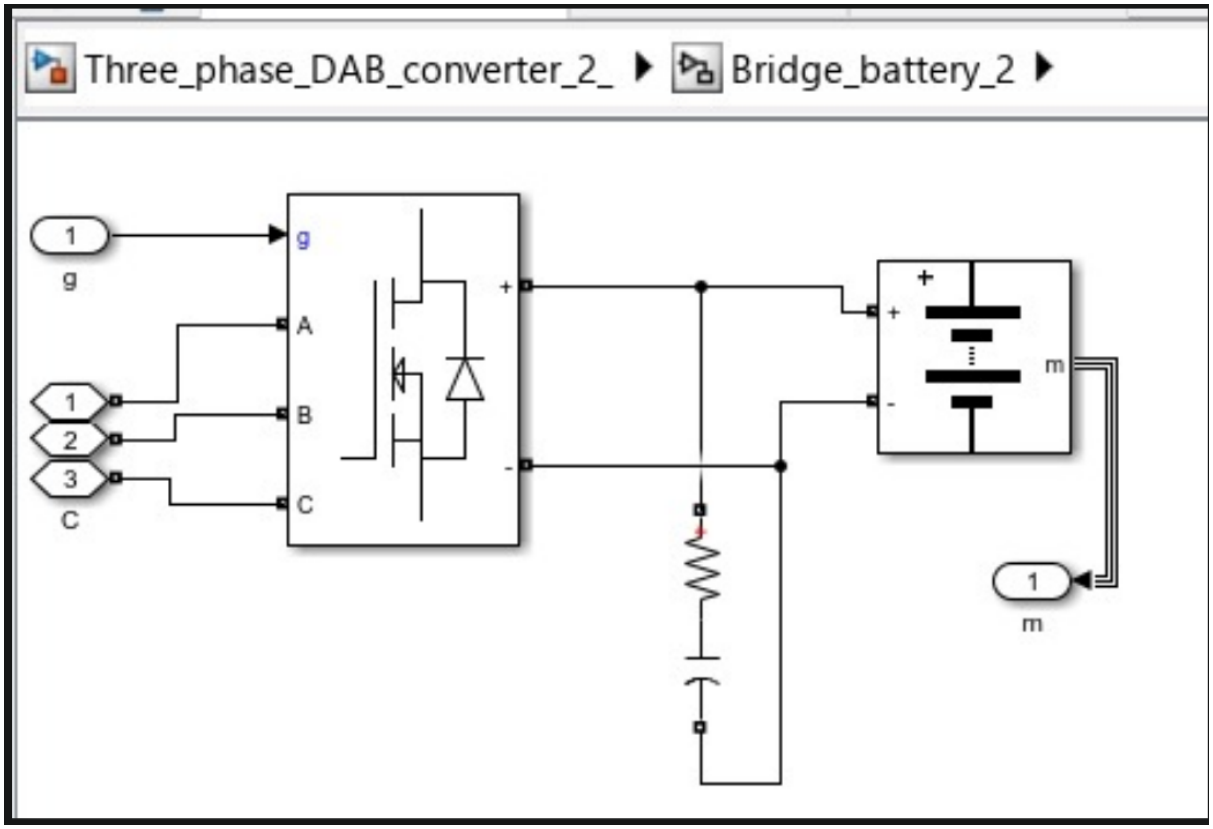

Fig4: Simulink Model subsystem of bridge battery2

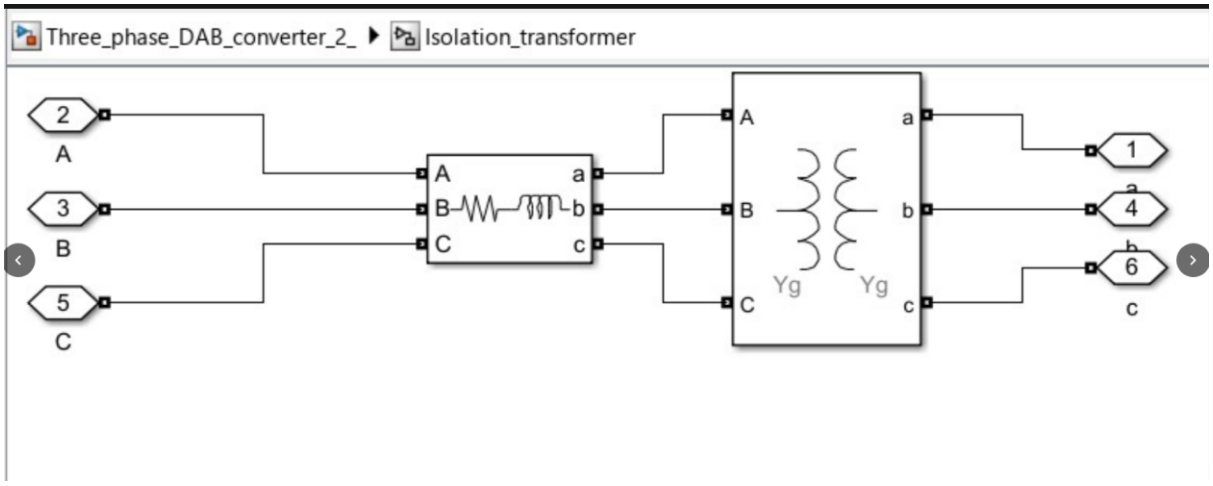

Fig5: Simulink model sdubsystem for isolation transformer .

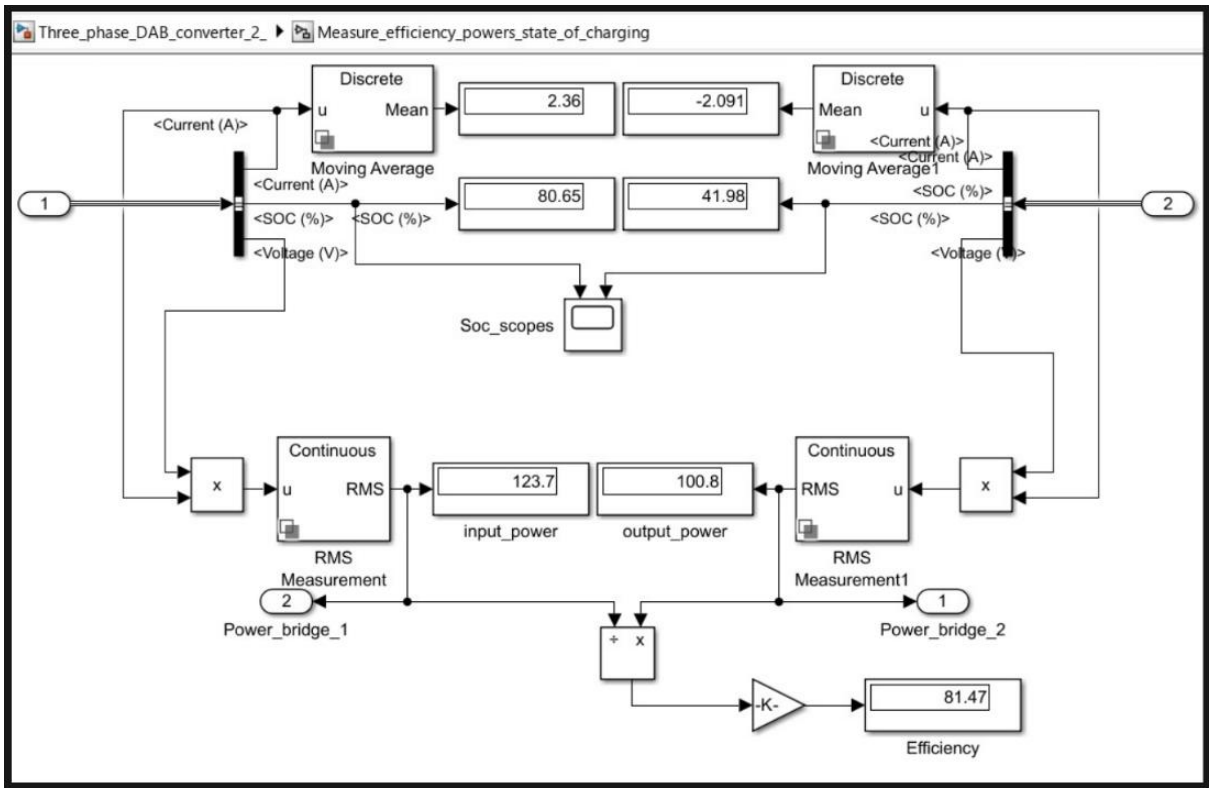

Fig6: simulink model subsystem for measurement of efficiency , power SOC measurements.

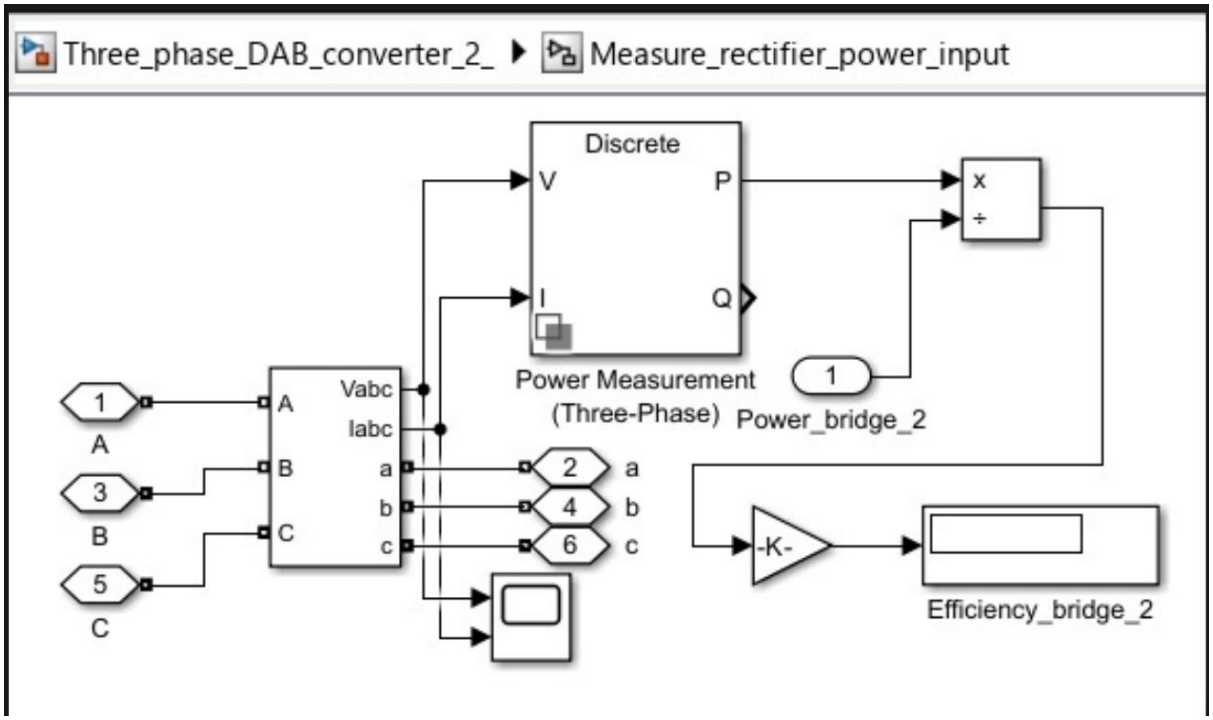

Fig7: Measure rectifier power input

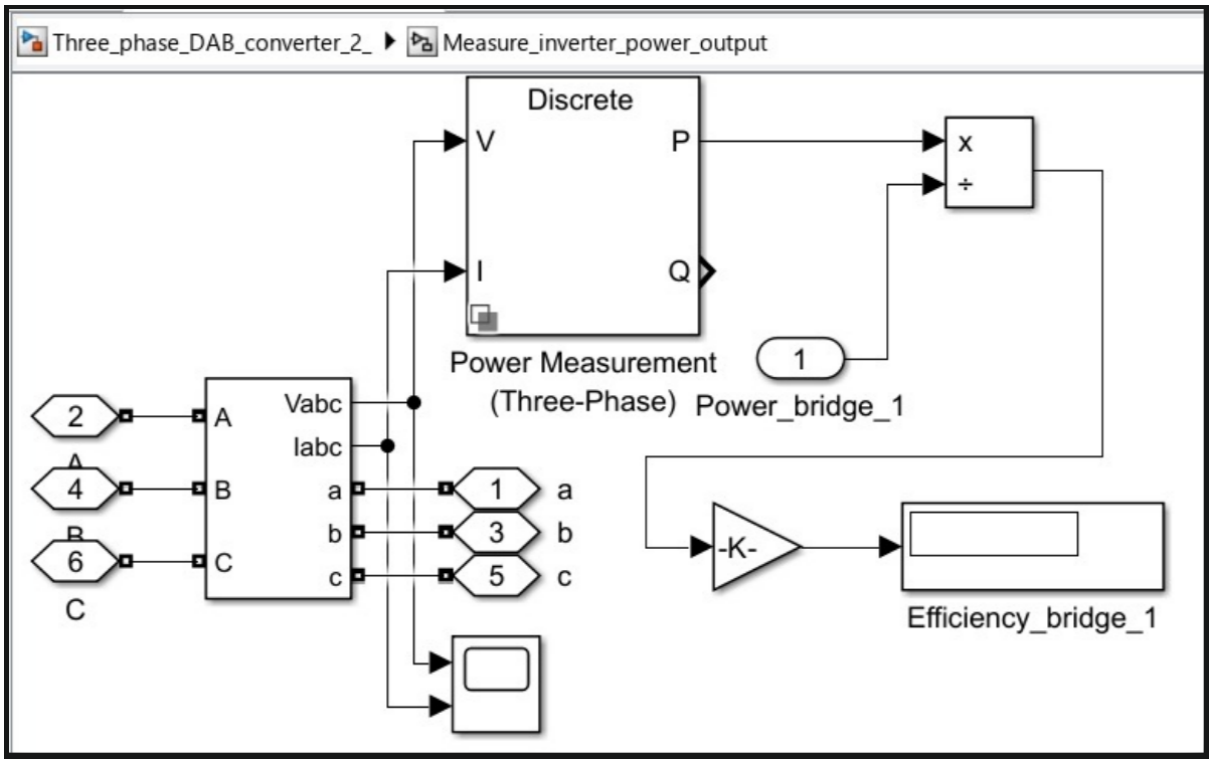

Fig8: Measure rectifier power output.

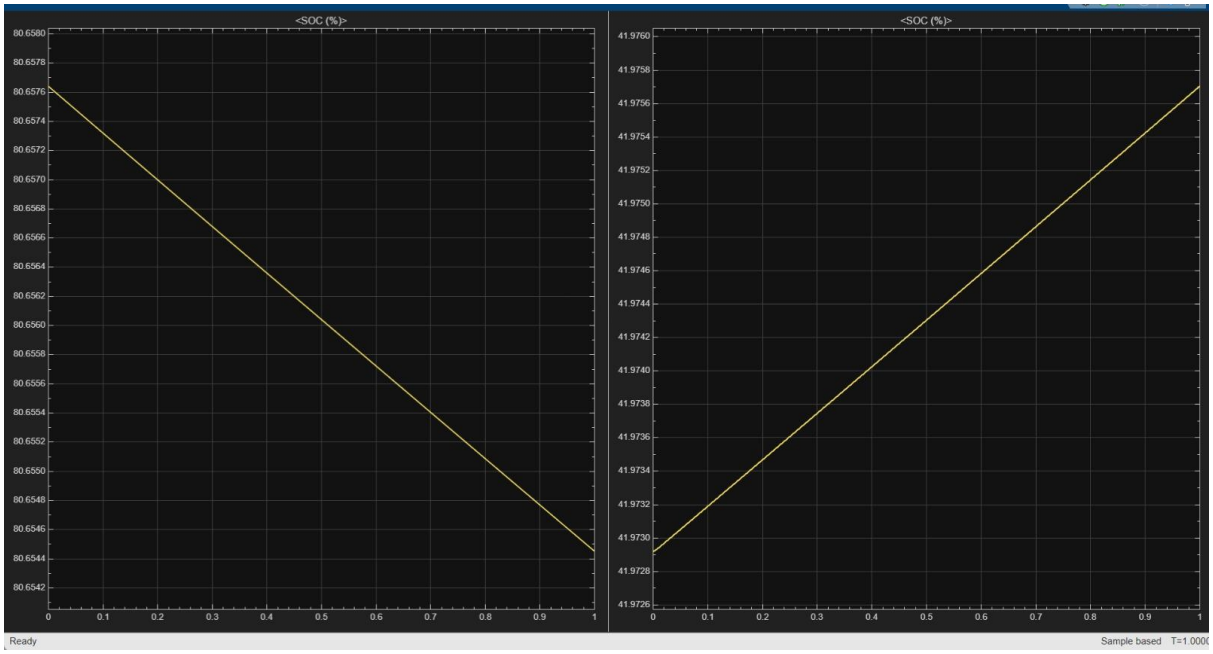

Fig9: Plot of SOC during forward Charging (power flow from batter1 to battery 2)

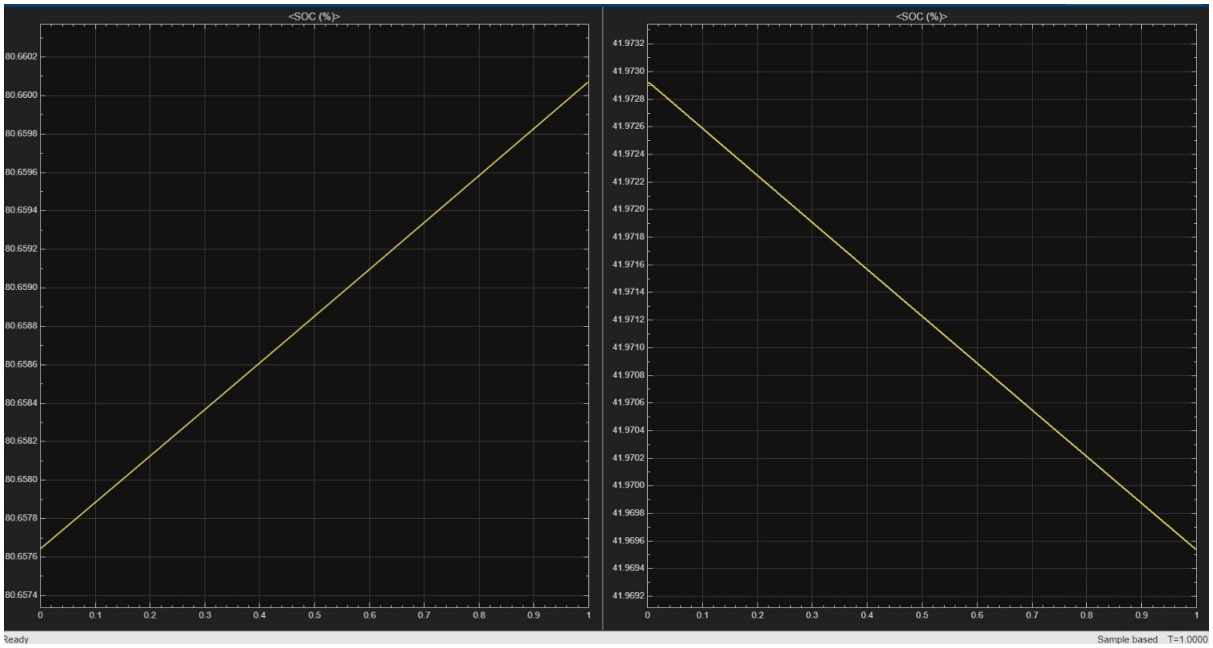

Fig10: Plot of SOC during forward Charging (power flow from batter2 to battery1)

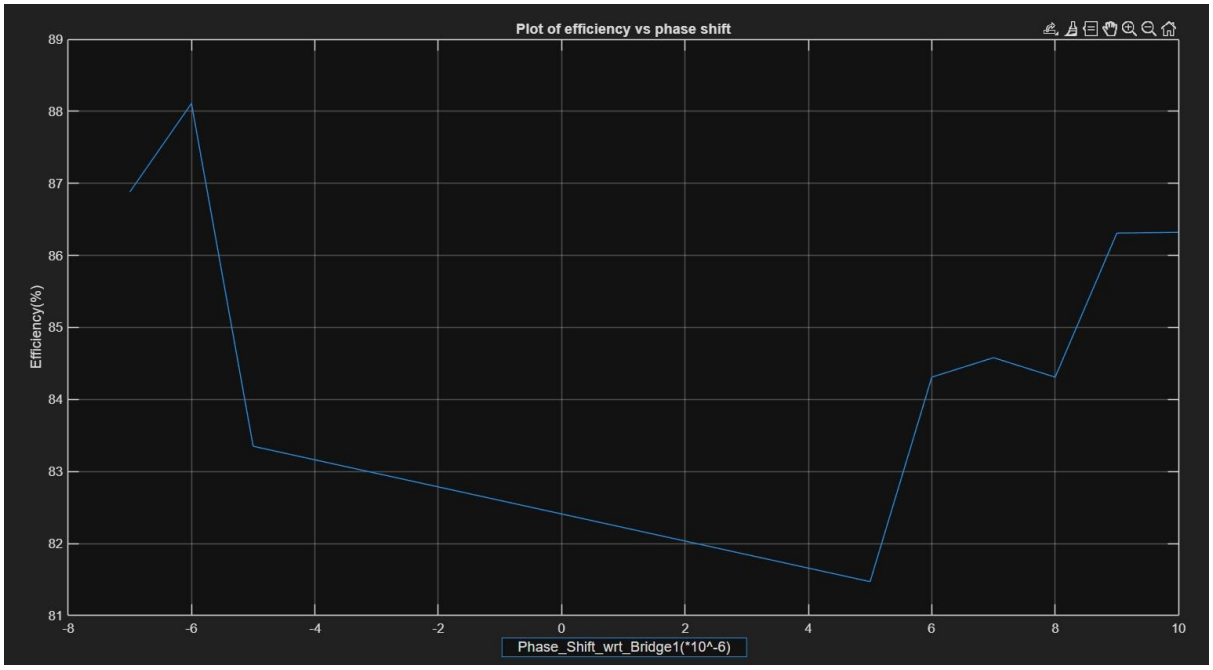

Fig11: Plot of efficiency vs phase shift delay.

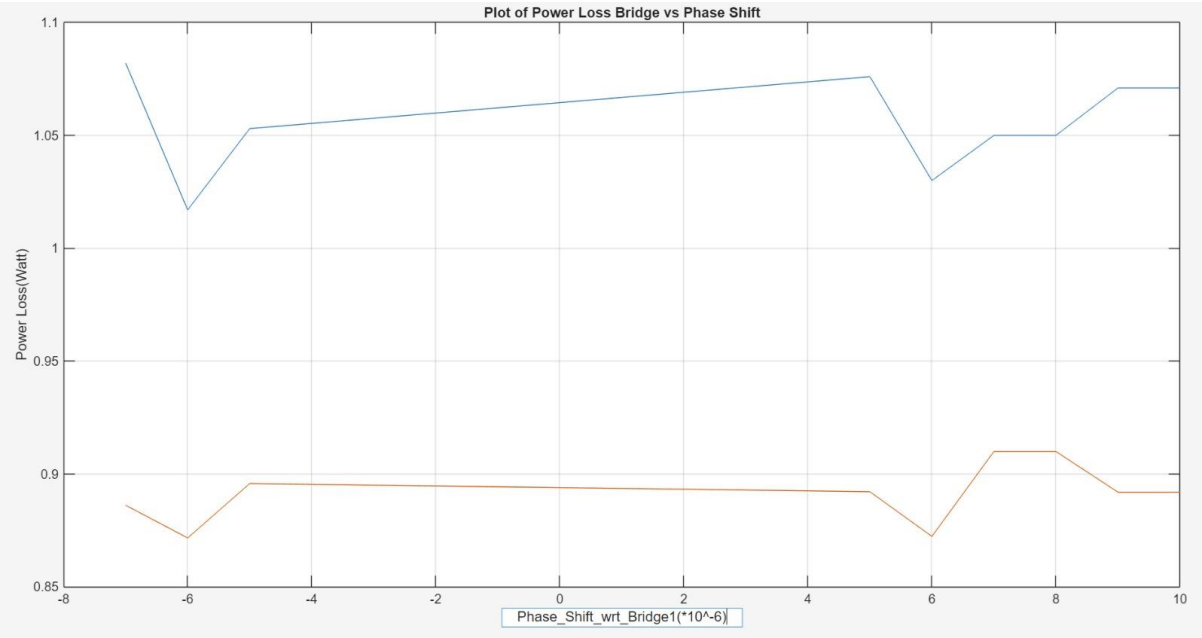

Fig12: Plot of power loss of Bridge vs Phase shift delay (Upper blue one is for bridge 1 and lower red one is for bridge 2).