REPORT: Three-Phase Dual Active Bridge (DAB) Converter

Problem statement:

Three-Phase Dual Active Bridge Converter for Bidirectional Power Transfer

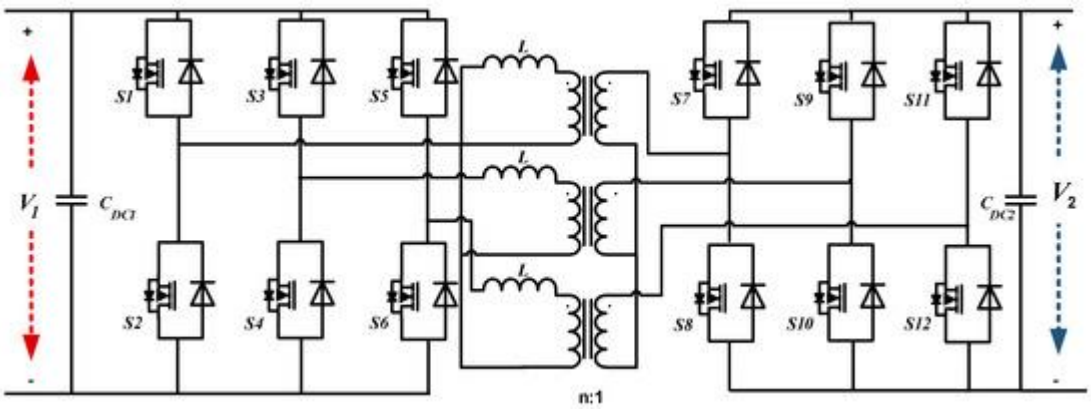

---

2. Abstract

This project presents the design and simulation of a three-phase Dual Active Bridge (DAB) converter for bidirectional power transfer between two battery systems. The converter uses phase-shift control to regulate power flow through a high-frequency isolation transformer. Simulation results demonstrate successful charging and discharging operation with observable efficiency and power transfer characteristics. The system performance is analysed in terms of current, voltage, state of charge, and efficiency.

Assumptions and Limitations

- **Ideal Switches:** Initially, we assume switches have negligible resistance to simplify the first simulation run.
- **Constant Temperature:** We assume the batteries operate at room temperature (thermal effects are usually ignored in basic DAB hackathon models).
- **Dead-time:** A small dead-time is included in the PWM signals to prevent short circuits in the bridge legs.

---

3. Introduction

With the increasing demand for efficient energy storage and electric vehicles, bidirectional DC-DC converters have become essential. The Dual Active Bridge (DAB) converter is widely used due to its high efficiency, galvanic isolation, and ability to transfer power in both directions.

In this project, a three-phase DAB converter is implemented using Simulink to enable power transfer between two battery systems. The system includes inverter bridges, an isolation transformer, and measurement blocks to evaluate performance.

Why the Three-Phase DAB?

- **High Power Handling:** By using three phases, the current is split across three legs, reducing the stress on individual switches.
- **Lower Ripple:** The output current ripple is significantly lower than single-phase DABs, which extends the life of the batteries.
- **Soft Switching:** Under the right control (Phase-Shift), the converter can achieve **Zero Voltage Switching (ZVS)**, which dramatically reduces heat and energy loss during switching.

  Mathematical Analysis of DAB Converter *(VERY HIGH VALUE)*

  The power transfer in a Dual Active Bridge (DAB) converter is controlled by the phase shift between the primary and secondary bridge voltages. The power transferred through the transformer can be approximated as:

$$P = \frac{V_1 V_2}{\omega L} \cdot \delta \left(1 - \frac{\delta}{\pi}\right)$$

  Where:

- V_1, V_2= DC voltages of the two bridges
- ω= Angular frequency
- L= Leakage inductance of transformer
- δ= Phase shift angle

  This equation shows that power flow depends directly on the phase shift. By controlling δ, bidirectional power transfer is achieved

  When $\delta > 0$, power flows from primary to secondary.
  When $\delta < 0$, power reverses direction.
  This makes DAB highly suitable for battery charging/discharging applications.

---

4. Objective

- To design a three-phase DAB converter
- To achieve bidirectional power transfer between two batteries
- To analyse power, current, SOC, and efficiency
- To study losses and system behaviour

5. System Description

5.1 Overall Circuit

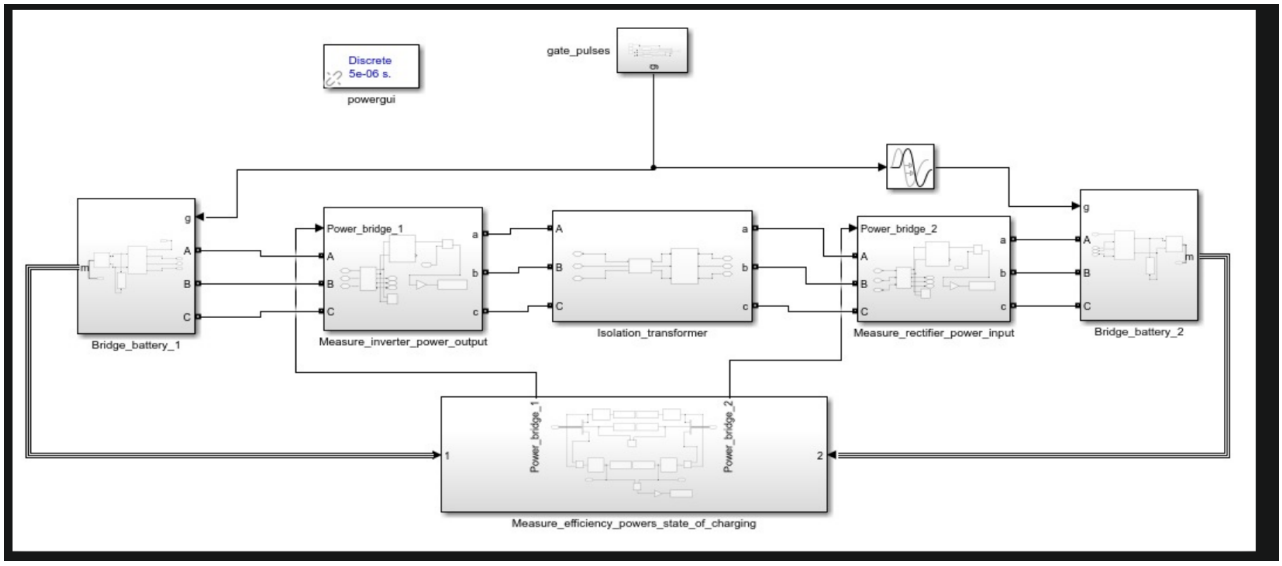

Above circuit is during Forward charging.

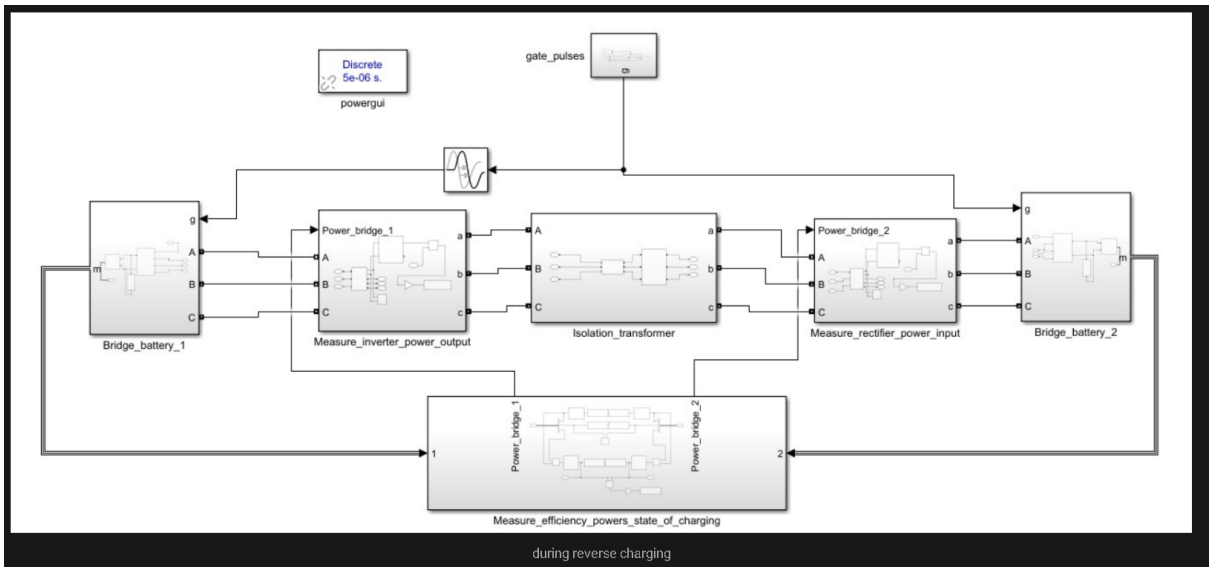

Above circuit is during reverse charging.

The system consists of two three-phase bridges connected through an isolation transformer. Each bridge is connected to a battery source. The first bridge converts DC to AC, which is transferred through the transformer and then converted back to DC by the second bridge.

5.2 Bridge and Battery Subsystem

Each side consists of a battery connected to a three-phase bridge. The bridge acts as an inverter or rectifier depending on the direction of power flow. An RC branch is included to reduce switching transients and stabilize the system.

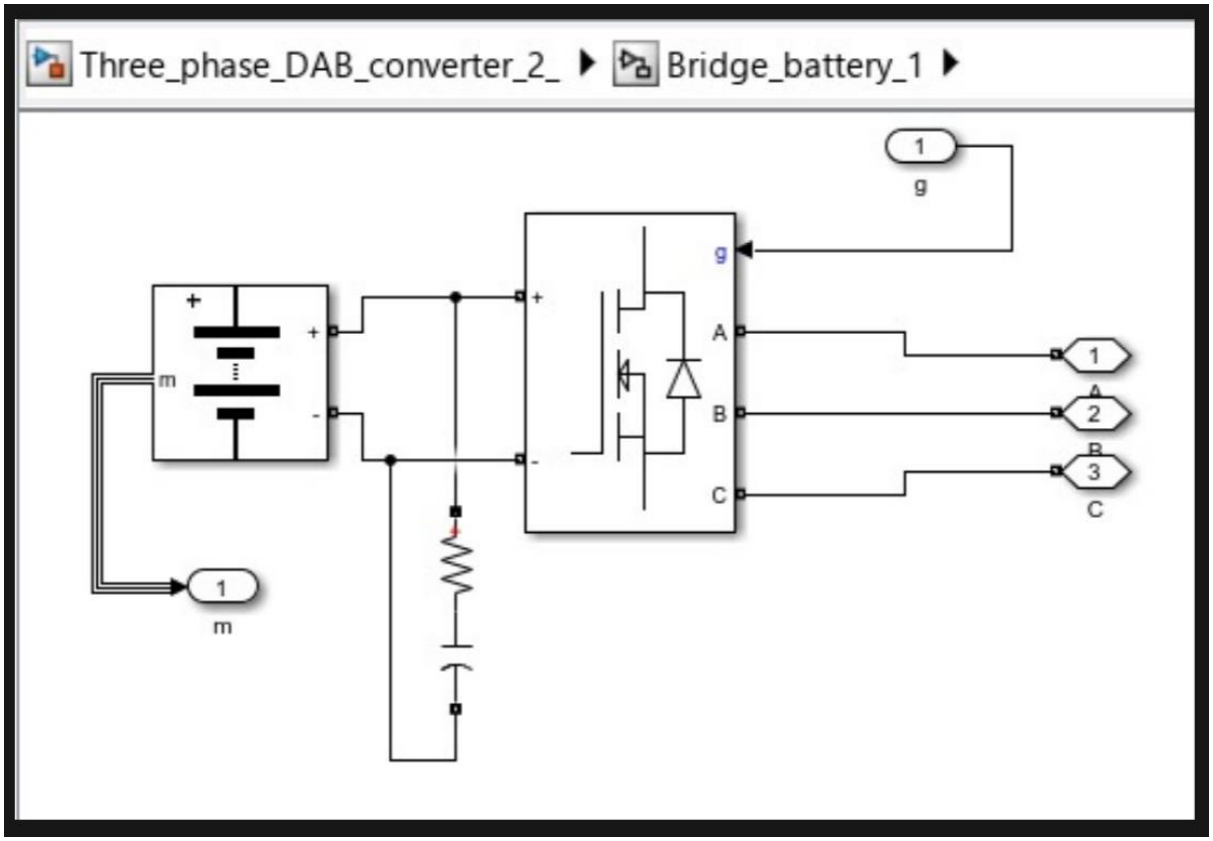
Three_phase_DAB_converter_2_
Bridge_battery_1
1
g
g
A
B
C
1
A
2
B
3
C
m
1
m

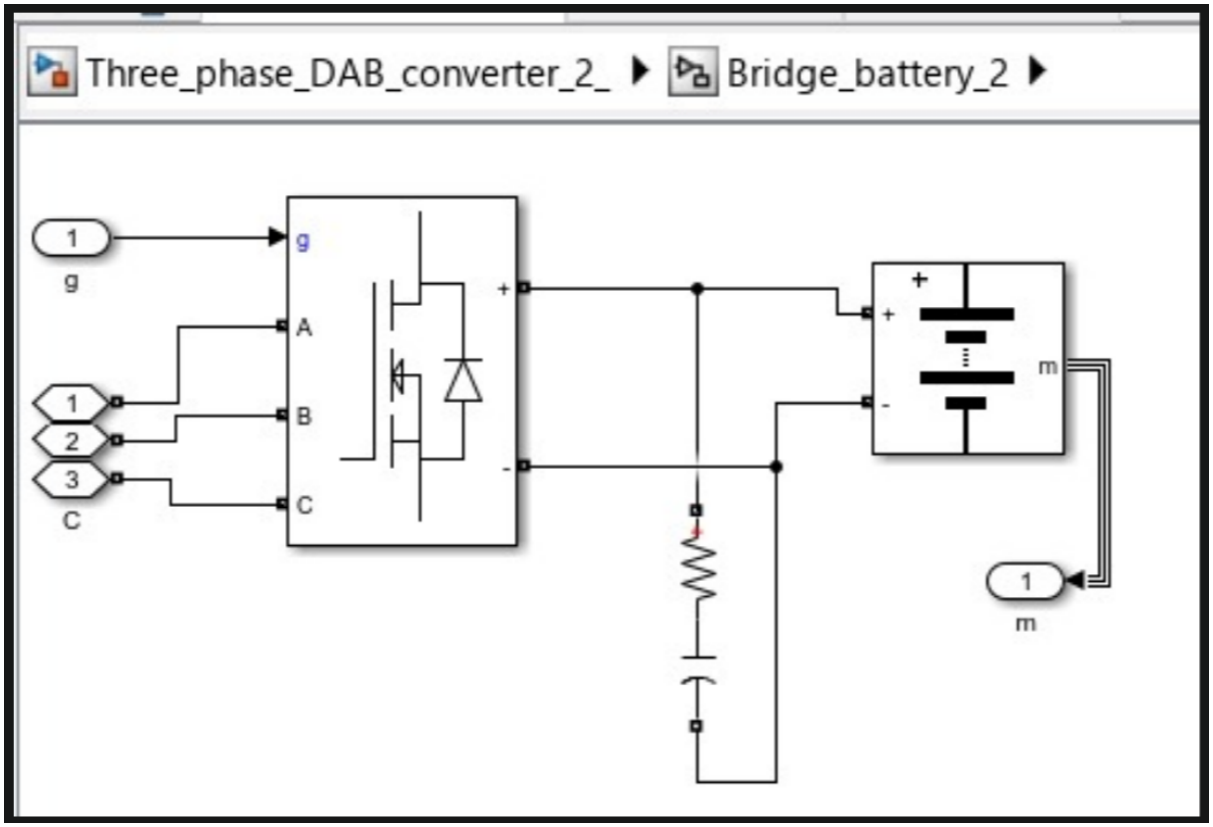
Three_phase_DAB_converter_2_
Bridge_battery_2
1
g
g
A
B
C
1
2
3
C
m
1
m

5.3 Isolation Transformer

A three-phase Yg-Yg isolation transformer is used to provide electrical isolation and enable voltage matching between the two sides. The transformer also introduces leakage inductance, which plays a role in power transfer control.

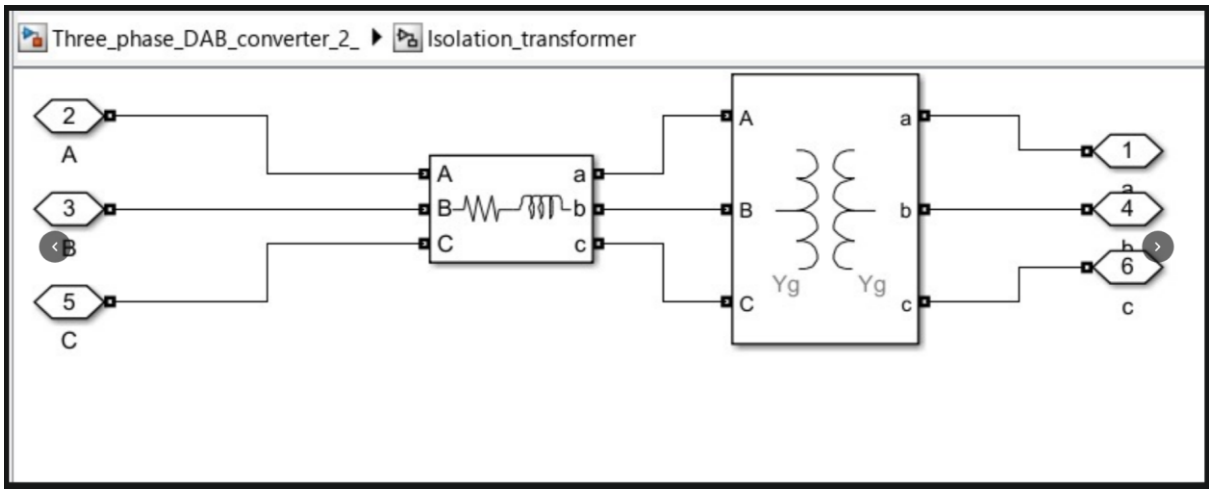

5.4 Measurement System

The measurement subsystem calculates current, voltage, power, state of charge (SOC), and efficiency. RMS blocks are used for power estimation, and moving averages are used for stable SOC measurement.

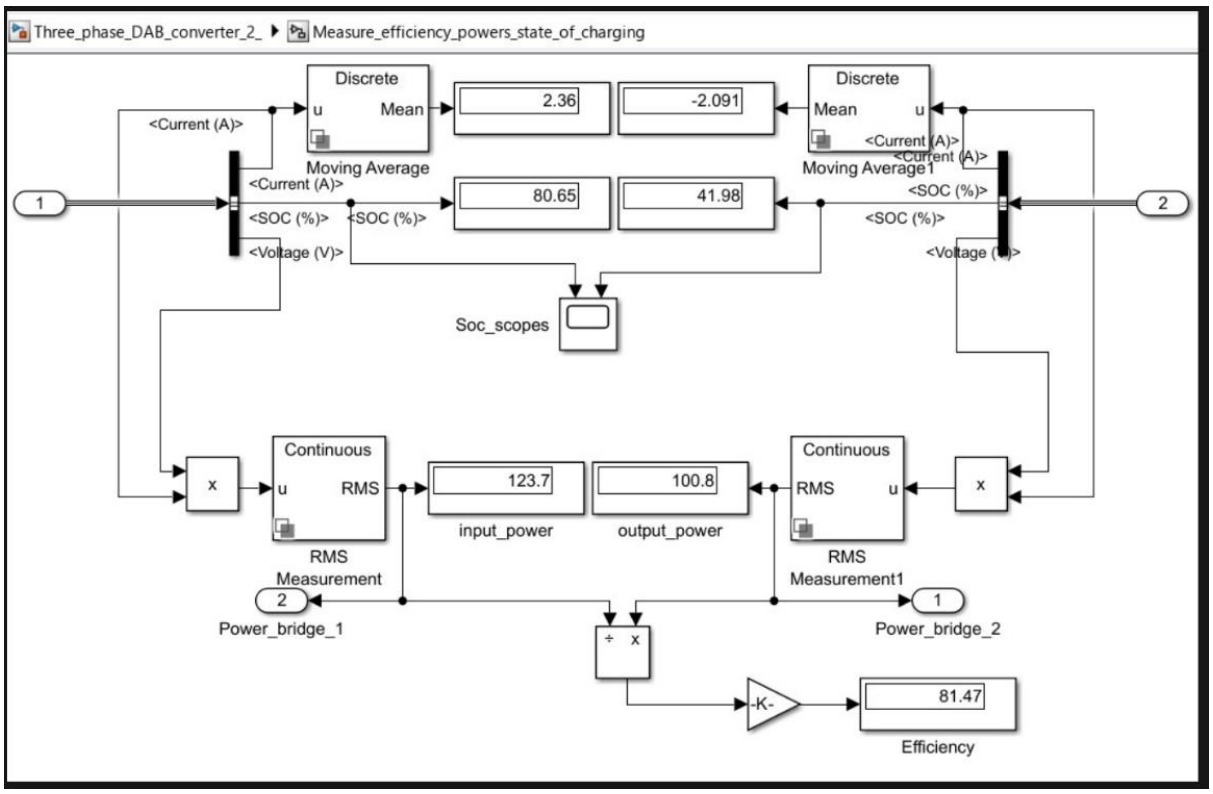

---

6. Working Principle

The DAB converter operates based on phase shift control between the two bridges. By adjusting the phase difference between the switching signals, power flow is controlled.

When the phase shift is positive, power flows from one battery to another, and when reversed, the direction of power flow changes. The transformer transfers energy in AC form, ensuring isolation.

---

7. Results

7.1 Observed Values during forward charging(battery 1 to battery 2) at a phase delay of 5usec:

- Input Current ≈ **2.36 A**
- Output Current ≈ **−2.09 A**
- Input Power ≈ **123.7 W**
- Output Power ≈ **100.8 W**
- Efficiency ≈ **81.47%**
- SOC (Battery 1) ≈ **80.65%**
- SOC (Battery 2) ≈ **41.98%**

From our waveforms:

Left(discharging Battery):

- Initial SOC= 80.657%
- Final SOC = 80.6545%
- Delta SOC=0.0031%

Right (Charging Battery):

- Initial SOC= 41.9728%
- Final SOC = 41.9760%
- Delta SOC=0.0032%

Change in SOC:

$$\Delta SOC_{ch} = 41.9760 - 41.9728 = 0.0032\%$$

Charging and Discharging Rate

Since the time interval considered is 1 second:

- Charging Rate:

$$= \frac{0.0032}{1} = 0.0032\%/sec$$

- Discharging Rate:

$$= \frac{0.0031}{1} = 0.0031\%/sec$$

These values indicate that both charging and discharging processes are nearly balanced.

13.3 Charging Time Estimation

To estimate practical performance, the time required for a **40% increase in SOC** (e.g., from 40% to 80%) is calculated.

- **Charging Time:**

$$t = \frac{40}{0.0032} \approx 12500 \text{ seconds} \approx 3.47 \text{ hours}$$

- **Discharging Time:**

$$t = \frac{40}{0.0031} \approx 12900 \text{ seconds} \approx 3.6 \text{ hours}$$

---

8. Discussion

8.1 Current Behaviour

The current on one side is positive while the other is negative, indicating correct bidirectional operation. One battery is charging while the other is discharging.

8.2 Power Loss Analysis

The difference between input and output power indicates losses in the system. These losses are mainly due to switching losses in power electronic devices, transformer losses, and resistive elements in the circuit.

8.3 Efficiency Analysis

The efficiency of the converter is approximately 81.47% at a phase delay of 5usec, which is lower than the ideal range (90–95%). This is due to non-ideal switching, leakage inductance, and absence of soft-switching techniques such as Zero Voltage Switching (ZVS).

8.4 Effect of RC Branch:

The RC branch helps in reducing oscillations and stabilizing the system. However, it also introduces additional losses, which can reduce efficiency if not properly designed.

8.5 State of Charge (SOC):

The SOC values indicate that power is flowing from the battery with higher charge to the one with lower charge, confirming correct system behaviour.

---

9. Conclusion:

The three-phase DAB converter successfully achieves bidirectional power transfer between two battery systems. The simulation results validate the working principle, with correct current direction and SOC behaviour. However, efficiency is limited due to switching and transformer losses. Future improvements can include optimized control strategies and soft-switching techniques to enhance performance.

Limitations:

- Complex control
- Sensitive to phase shift errors
- Requires proper transformer design
- Lower efficiency without soft switching

---

10. Future Scope:

- Implementation of soft switching (ZVS/ZCS)
- Optimization of transformer parameters
- Improved control of phase shift
- Hardware implementation

---

11. Applications:

- Electric vehicle charging systems
- Renewable energy storage
- Microgrids
- Battery management systems
- DC distribution systems

---

12. References*:*

- Power Electronics textbooks
- IEEE papers on DAB converters
- MATLAB/Simulink documentation