From Evolution to Therapy: Precision Targeting of Functionally Divergent Integrins

Shixi Sun[1], Yufeng Chen[2], Li Liu[1,3]

[1] College of Health Solutions, Arizona State University [2] University of Texas Medical Branch, [3] Biodesign Institute, Arizona State University

INTRODUCTION

Integrins are essential cell-adhesion trans-membrane receptors that regulate cell–cell and cell–extracellular matrix (ECM) interactions, playing central roles in hemostasis, immune regulation, angiogenesis, and tumor progression. Integrins have broad involvement in human disease and are important therapeutic targets for treating thrombosis, cardiovascular diseases, cancer, and inflammatory or fibrotic disorders. However, excessive bleeding, limited selectivity, compensatory signaling, and context-dependent effects remain major challenges, leading several integrin-targeting drugs to be withdrawn from the market or to fail in clinical trials [1, 2].

In this study, we focus on the PS2 α-integrin group, which share a conserved Arg-Gly-Asp (RGD) binding capability but exhibit striking divergence in ligand preference, tissue distribution, and physiological specialization. This group includes αIIb (a platelet-restricted receptor mediating fibrinogen-mediated clot formation), α5 (the primary fibronectin receptor involved in matrix assembly), αV (a broadly expressed integrin central to angiogenesis and tumor biology), and α8 (a tissue-specific receptor important in developmental and organ-specific adhesion).

Evolutionary analysis provides a powerful framework to distinguish conserved structural cores from lineage-specific adaptations that underlie functional specialization. While most phylogenetic studies of integrins focus primarily on reconstructing evolutionary relationships and building gene trees, they rarely translate evolutionary signals into insights for drug design or target selection [3, 4]. As a preliminary study, we explore whether patterns of conservation, divergence, and lineage-specific innovation across PS2 paralogs in 27 vertebrate species—spanning approximately 450 million years of evolutionary history—can reveal functionally important and subtype-specific regions. We map these evolutionary signals onto structural and functional domains to assess their potential relevance for selective therapeutic targeting. By integrating evolutionary constraint with functional divergence, we aim to determine whether paralog-specific adaptations can guide more selective and precision integrin-targeting strategies.

METHODS

PS2 group of integrin alpha (ITGA) proteins
- αIIb, α5, αV, α8
- from 27 vertebrate taxa

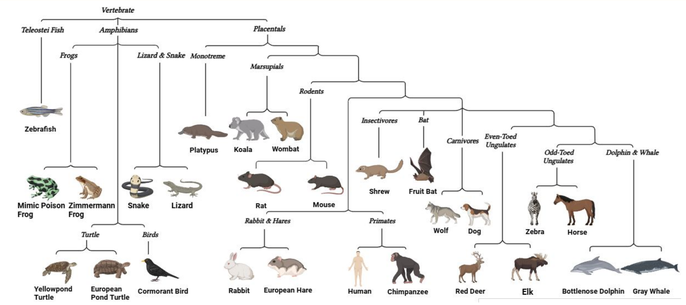

Sequence Collection
- 110 sequences
  - 27 taxa × 4 paralogs
  - 2 outgroups

Functional Annotation
- Heterodimer-forming β subunits,
- Ligand-binding preferences,
- Cell/tissue-specific expression

Protein Structure
- Heterodimers
- With/without bound ligands

Multiple Sequence Alignment → Phylogeny Inference → Divergent Time Estimation → Ancestral Sequence Reconstruction

Ancestral Function Inference → Sequence-Function Mapping

Selective Targeting
- Conserved vs. lineage-specific
- Cross-reaction

CONCLUSIONS

- PS2 integrins originated prior to vertebrate evolution. The four paralogs diverged through stepwise duplication events during early vertebrate evolution.
- The MRCA of PS2 integrin likely functioned as a broadly expressed RGD-binding ECM receptor. Compensatory signaling among paralogs likely arise from these conserved regions.
- The platelet-restricted fibrinogen-binding function of αIIb represents a derived innovation associated with vertebrate hemostasis.
- Excessive bleeding and off-target effects in integrin-directed therapies likely arise from non-selective binding to conserved RGD-binding interfaces shared across paralogs.
- Targeting αIIb-specific, lineage-derived regions may improve selectivity and reduce bleeding-related adverse effects.

RESULTS

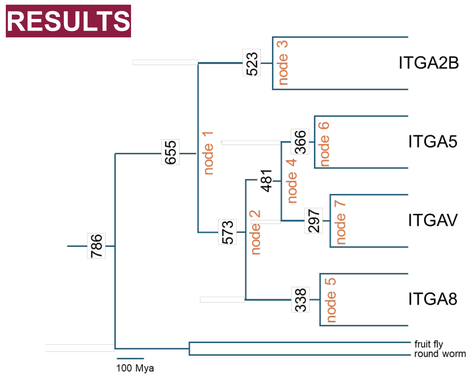

Figure 1. Time-calibrated phylogeny of integrin alpha (ITGA) subunits (αIIb, α5, αV, and α8). Orthologs of 27 representative vertebrate species (not shown) are placed within each ITGA clade. Numbers at internal nodes are estimated divergence times in million years ago (Mya).

Table 1. Functional annotations of human integrin alpha subunits (αIIb, α5, αV, and α8) and reconstructed internal ancestral nodes based on maximum parsimony estimation. Presence (1) and absence (0). MRCA (Most Recent Common Ancestor).

	Heterodimer forming			Ligand binding			Cells expressed			
	β1	β3	β5	Fn	Fb	Vn	Pl	Im	Ms	Ep
α2B	0	1	0	1	1	1	1	0	0	1
α5	1	0	0	1	0	0	1	1	1	1
αV	1	1	1	1	1	1	1	1	1	1
α8	1	0	0	1	0	1	0	0	1	1
Node1 (MRCA)	0/1	0/1	0	1	0/1	1	1	0	0/1	1
Node2 (α5_V_8)	1	0	0	1	0	1	1	0	1	1
Node3 (α2B)	0	1	0	1	1	1	1	0	0	1
Node4 (α5_V)	1	0	0	1	0	1	1	1	1	1
Node5 (α8)	1	0	0	1	0	1	0	0	1	1
Node6 (αV)	1	0	0	1	0	0	1	1	1	1
Node7 (α5)	1	1	1	1	1	1	1	1	1	1

Fn (fibronectin), Fb (fibrinogen), Vn (vitronectin)
Pl (platelets), Im (immune system cells), Ms (muscle tissue), Ep (epithelia tissue)

Figure 2. (left) Structure of the αIIb-β3 heterodimer with the ligand-binding pocket highlighted (circled). (**right**) Reconstructed ancestral sequences from internal nodes are aligned to identify conserved and lineage-specific substitutions within the binding region.

FUTURE DIRECTIONS

This study is a pilot evolutionary framework for integrating phylogenetics with functional and therapeutic interpretation of integrins. We will expand the study to
- perform site-specific evolutionary rate analysis to identify lineage-specific adaptive residues,
- map positively selected and lineage-specific sites onto high-resolution integrin structures to identify candidate regions for subtype-selective targeting,
- examine compensatory expression and signaling among paralogs in disease-relevant cellular models, and
- investigate whether evolutionary constraint metrics can improve target prioritization in integrin-directed drug development.

REFERENCES

[1] Campbel et al. 2011. PMID: 21421922
[2] Slack et al. 2020. PMID: 34535788
[3] Huges. 2011. PMID: 11139295
[4] Johnson et al. 2009. PMID: 19161977

College of Health Solutions
Arizona State University