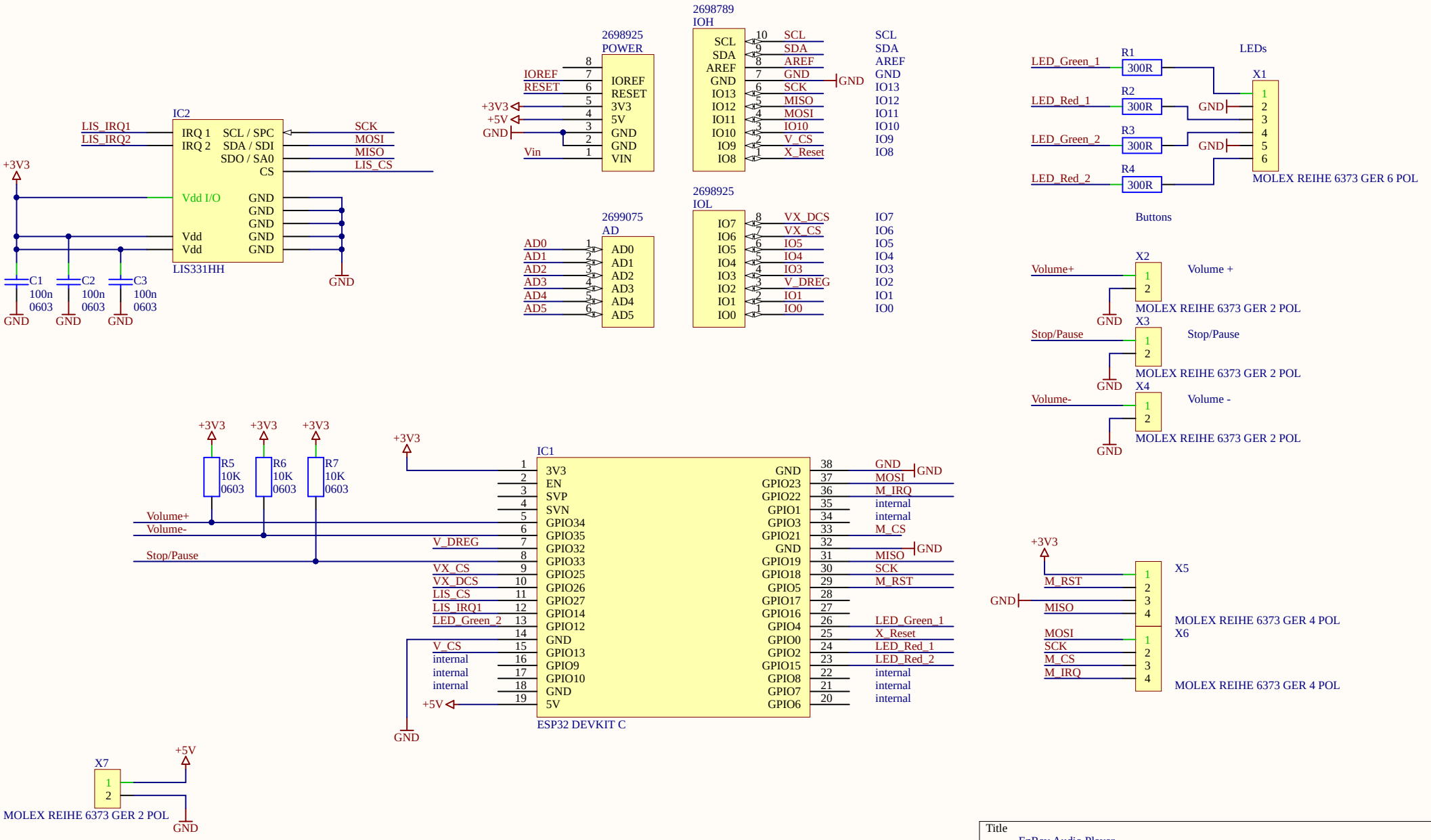

Title		
EnRav Audio Player		
Size A4	Number	Revision rBA
Date: 20.08.2019		Sheet 1 of 1
File: C:\Users\..\EnRavCarrier.SchDoc		Drawn By: EnRav (theSealion)