Sheet: /
File: 2tonewatch.kicad_sch

Title: E-Ink Display BLE Watch

Size: A4	Date:	**Rev:**
KiCad E.D.A. 9.0.7		Id: 1/5

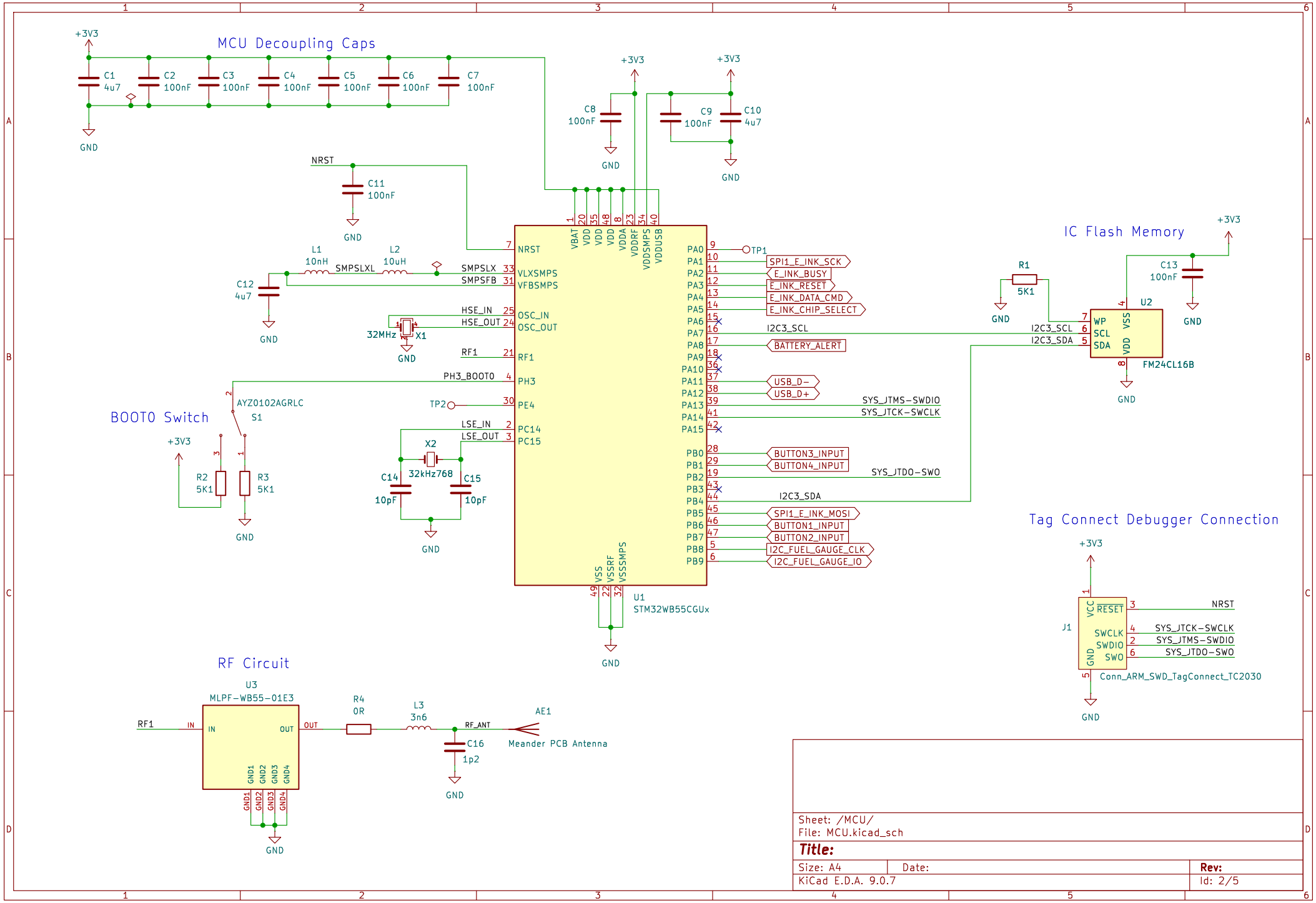

Sheet: /MCU/
File: MCU.kicad_sch

Title:

Size: A4	Date:	Rev:
KiCad E.D.A. 9.0.7		Id: 2/5

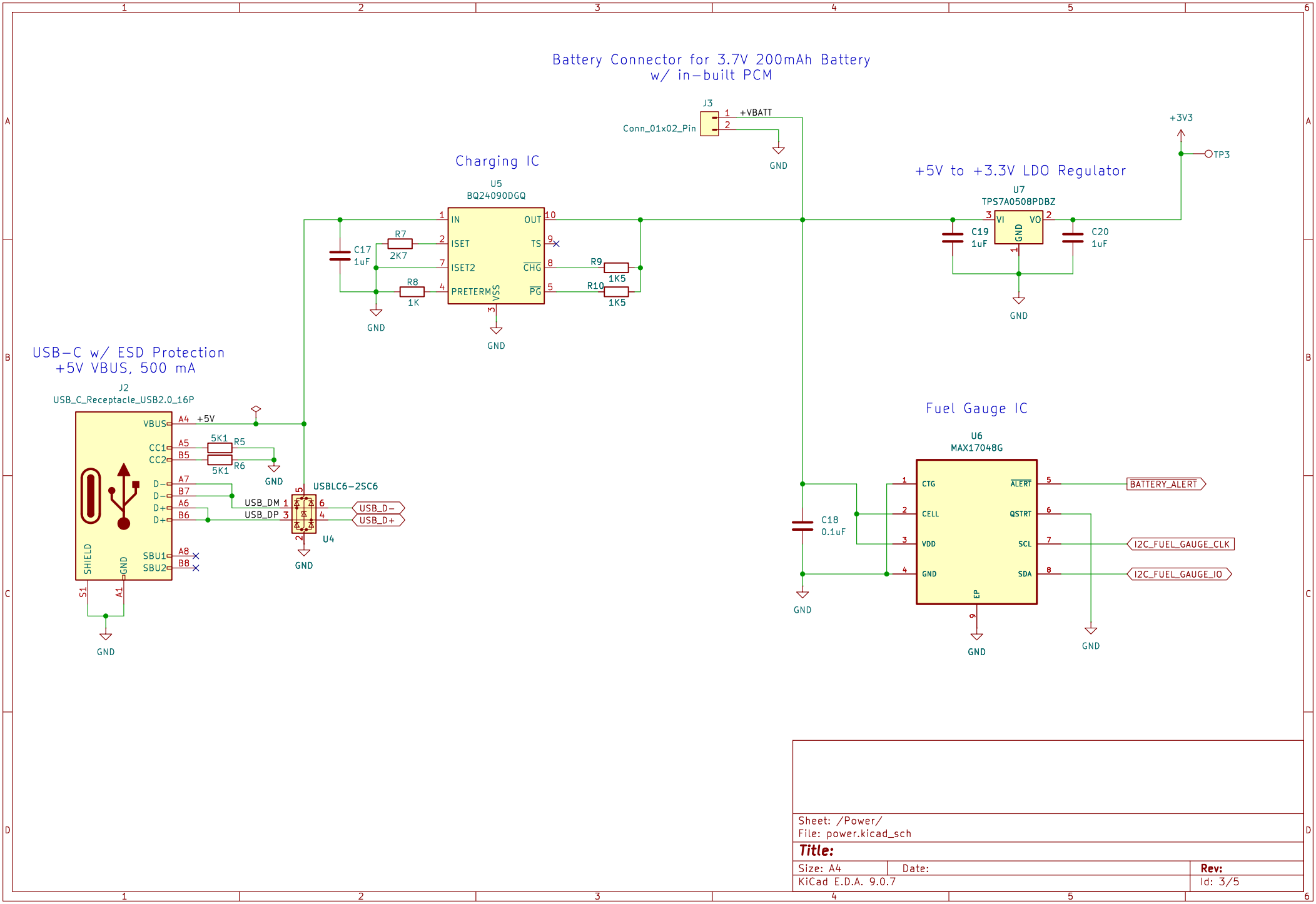

Sheet: /Power/
File: power.kicad_sch

Title:

Size: A4	Date:	Rev:
KiCad E.D.A. 9.0.7		Id: 3/5

Connector for GDEM0122T61 1.22 inch E-Ink display

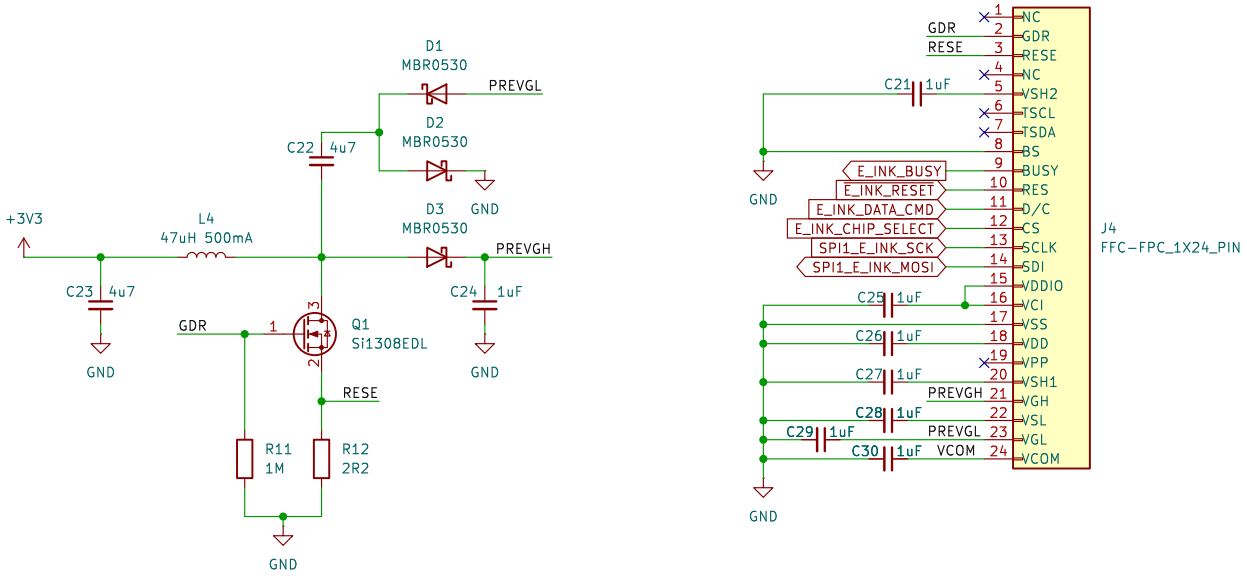

Sheet: /eink-connector/
File: eink-connector.kicad_sch

Title:

Size: A4	Date:	Rev:
KiCad E.D.A. 9.0.7		Id: 4/5

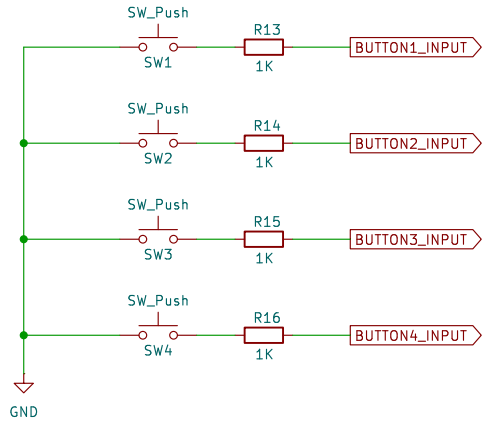

Sheet: /button_switches/
File: button_switches.kicad_sch

Title:

Size: A4	Date:	**Rev:**
KiCad E.D.A. 9.0.7		Id: 5/5