POLITECNICO
MILANO 1863

AUTOMATION AND CONTROL LABORATORY

Course introduction and experiences' description

Automation and Control Laboratory

Hamid Reza Karimi
Dipartimento di Meccanica
Tel. 8489 hamidreza.karimi@polimi.it

POLITECNICO
MILANO 1863

CONTACTS

Prof. Hamid Reza Karimi hamidreza.karimi@polimi.it +39.02. 2399.8489

Dr. Alessandro Fontanella alessandro.fontanella@polimi.it

Dr. Holguer Humberto Noriega Zambrano holguerhumberto.noriega@polimi.it

Dipartimento di Meccanica (Building B23), via La Masa 1, 20156 Milan

Course objective

Provide the ability to apply control structures on real systems and to critically analyse their modelling, by means of different experimental and numerical experiences.

Reference areas:

- Industrial automation
- Process control
- Vibration control
- Motion control
- Electrical drives and machine
- …

Pre-requisites

- System dynamics and modelling
  (mechanical, electrical, process)
- Drives and actuators
  (electrical and pneumatic actuators)
- Fundamentals of control engineering
  (Classical control theory, PID regulators)
- Automatic control and process control
  (Modern control – state observers – pole placement and optimal control)
- Industrial Automation/Informatics
  (Discrete event systems, digital control – PLC – PID controller design)

Development of the course

- Experimental applications emulating automatic plants or reproducing systems or processes to be controlled

- Single experience assigned to a team of students that develop it autonomously and thoroughly during all the course duration

Development of the course

What is required to each team

- Development of model/s for the assigned experience
- Identification of system parameters
- Implementation and verification of control logics on the model
- Implementation and verification of control logics on the real system
- Experimental tests and comparison between experimental and numerical results
- Final report on the carried out activities
- Final presentation(*) to the classroom

What is required to each student

- Active involvement in the activities of the team
- Critical participation to the final presentation(*) of the other teams

Course room and schedule

- All the laboratory sessions (except this intro lesson) will be in the mechatronic lab, ground floor of building B23

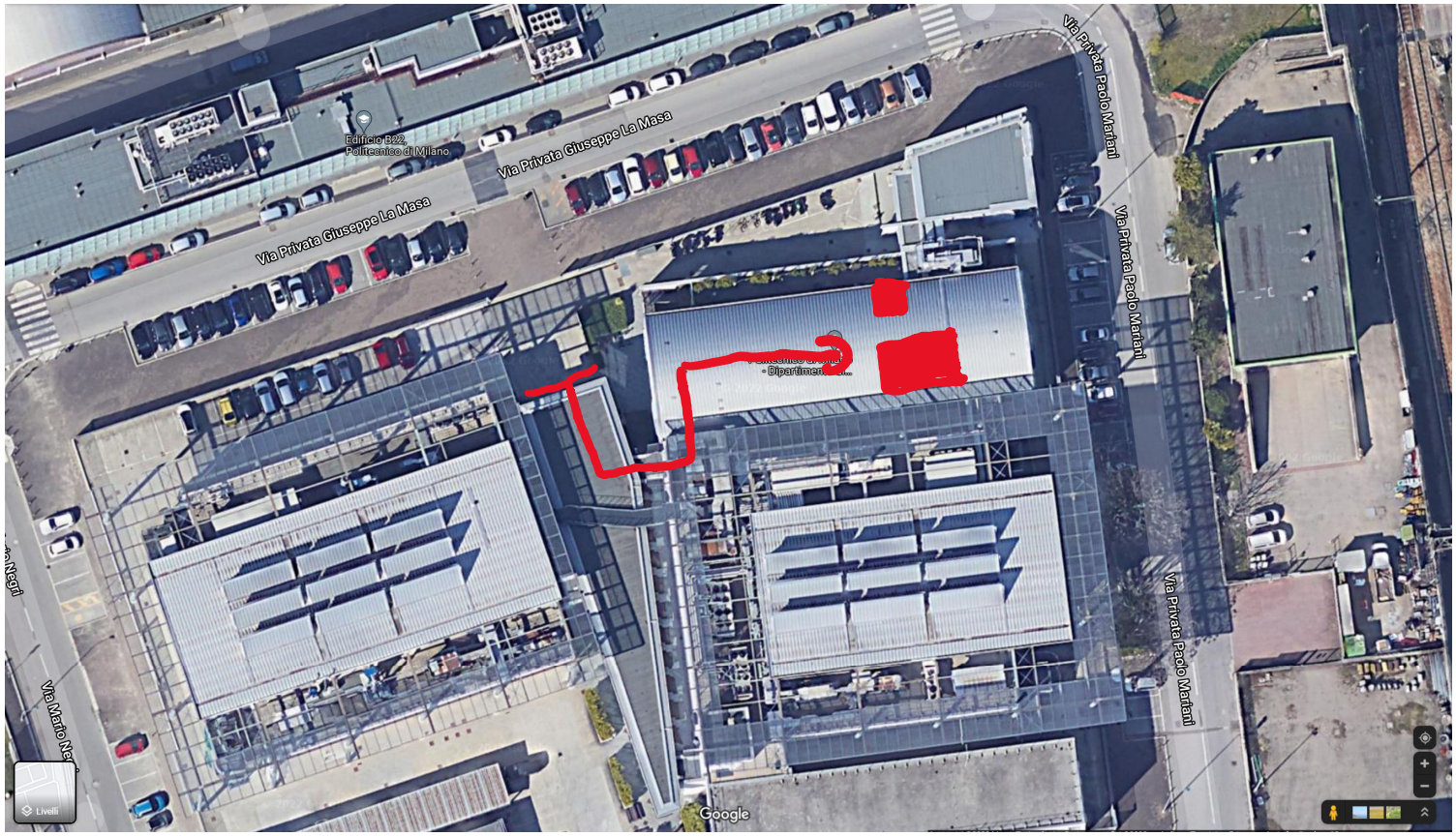

Course room and schedule

- All the laboratory sessions (except this intro lesson) will be in the mechatronic lab, ground floor of building B23

- Course hour:
  - Tuesday from 13.15 to 18.15 (5 hours, all the Tuesdays except holidays)
  - Friday from 9.15 to 13.15 (4 hours, alternated with the other alphabetic group)

- The detailed calendar is available on webeep

- <u>Participation to the lab sessions is mandatory</u>
- We will set up a dedicated schedule to guarantee experience usage for the “duplicated” experiences

Exam rules

- The course evaluation is made on the output of the laboratory experience
- Report of the laboratory (max 50 pages without Appendix)
- Presentation (20 minutes)
- Questions (approx. 10 minutes)

Exam rules

Evaluation criteria

- Evaluation of the team activities and of the single student contribution to the team activities, mainly based on participation to the laboratory activities during official hours (team/single student)
- Evaluation of the final report (team)
- Evaluation of the final presentation (team/single student)
- (Evaluation of the participation to the final presentation of the other student (single student))

Important dates

- February 23rd, 2024 – 2:00 pm Deadline for the “Assignment Form” submission.
- Around the middle of April, 2024 mid-term reviews (if required, not mandatory)
- June 5th – end of the day, 2024 Deadline for the report submission
- June 12th-13th , 2024 (tentative) Final presentation day

Available experiences (1/2)

1. Automation of an elevator plant
2. Control of electric drives and pneumatic actuators in an automated plant
3. Automation of a storage warehouse

Discrete event systems

4. Control of a PMDC – PMDC system
5. Control of a PMSM – PMDC system

Electrical drives

Available experiences (2/2)

6. Industrial Plant
7. Control of linear vibrations
8. Control of a linear pendulum
9. Control of a rotational pendulum I
10. Control of a rotational pendulum II
11. Control of a reaction pendulum

Mechanical systems

12. 2D ball balancing
13. Control of a Maglev system
14. Magnetic bearing (Maglev 2)
15. Quanser Aero
16. Quadcopter

Mechanical systems with interaction with other physics

Available experiences:

1. **Automation of an elevator plant**
2. Control of electric drives and pneumatic actuators in an automated plant
3. Automation of a storage warehouse
4. Control of a PMDC – PMDC system
5. Control of a PMSM – PMDC system
6. Control of linear vibrations
7. Industrial plant
8. Control of a linear pendulum
9. Control of a rotational pendulum I
10. Control of a rotational pendulum II
11. Control of a reaction pendulum
12. 2D ball balancing
13. Maglev
14. Magnetic bearing (Maglev 2)
15. Quanser Aero
16. Quadcopter

Automation of an elevator plant

- Small scale model of an elevator with 4 floors
- Typical example of discrete event system to be controlled
- The control system is based on a PLC (ABB)
- The motion actuations are electromechanical (on/off)
- The control typology can be developed through increasing complexity levels.

Automation of an elevator plant

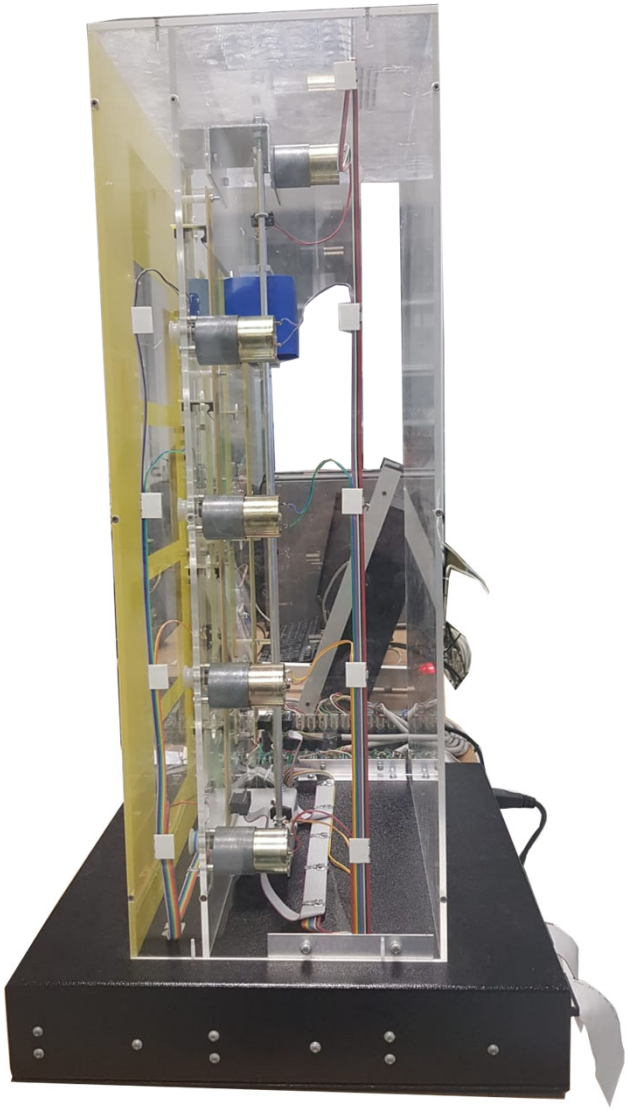

Automation of an elevator plant

4 FLOORS, EACH ONE EQUIPPED WITH:	• 1 door with electric opening • 1 closed-door optical detector • 1 open-door optical detector • 2 non-programmable safety limits for open/closed door • 1 button for ascending calls (except for the third floor) with light sign • 1 button for descending calls (except for the ground floor) with light sign • 1 light sign for car presence • 1 car presence detector
CAR INTERNAL COMMAND	• 4 button for the different floors • 1 stop button • 1 switch for simulating an obstacle to door closure • 4 light signs indicating the floor • 1 light sign inside the car

Modelling and control approaches

- The system and the control evolve through discrete events.
- Possible modelling option:
  - finite state automaton (finite state machine)
  - Petri net
  - Flow diagram
  - SFC (Sequential Functional Chart also known as GRAFCET)
  - other forms

Automation of an elevator plant – suggested developments

- Definition and preliminary description of two basic control logics:
  a) Logic without call storage
  b) Logic with call storage and intermediate stops

- Accurate description of the sequences and modelling.
- Characterisation of the command outputs and of the sensor and command signals (level and car calls)
- Implementation of the two logics a) and b) on the PLC (ladder diagram/ structure text /any of IEC 61131)
- Addition of all the safety features (obstacle detector and emergency stop)

Available experiences:

1. Automation of an elevator plant
2. **Control of electric drives and pneumatic actuators in an automated plant**
3. Automation of a storage warehouse
4. Control of a PMDC – PMDC system
5. Control of a PMSM – PMDC system
6. Control of linear vibrations
7. Industrial plant
8. Control of a linear pendulum
9. Control of a rotational pendulum I
10. Control of a rotational pendulum II
11. Control of a reaction pendulum
12. 2D ball balancing
13. Maglev
14. Magnetic bearing (Maglev 2)
15. Quanser Aero
16. Quadcopter

Control of electric drives and pneumatic actuators in an automated plant

- The emulated plant is composed by:
  - a rotating plate, actuated through a brushless motor
  - three pneumatic actuators (double effect cylinders) that execute synchronised actions.
- Discrete event system to be controlled
- The control system is based on a PLC (ABB)

The rotating plate has a mark, representing the position of the specimen to be processed. The mark/specimen have to be moved according to a pre-defined sequence to different angular position, corresponding to the pneumatic cylinders' actions.

Control of electric drives and pneumatic actuators in an automated plant

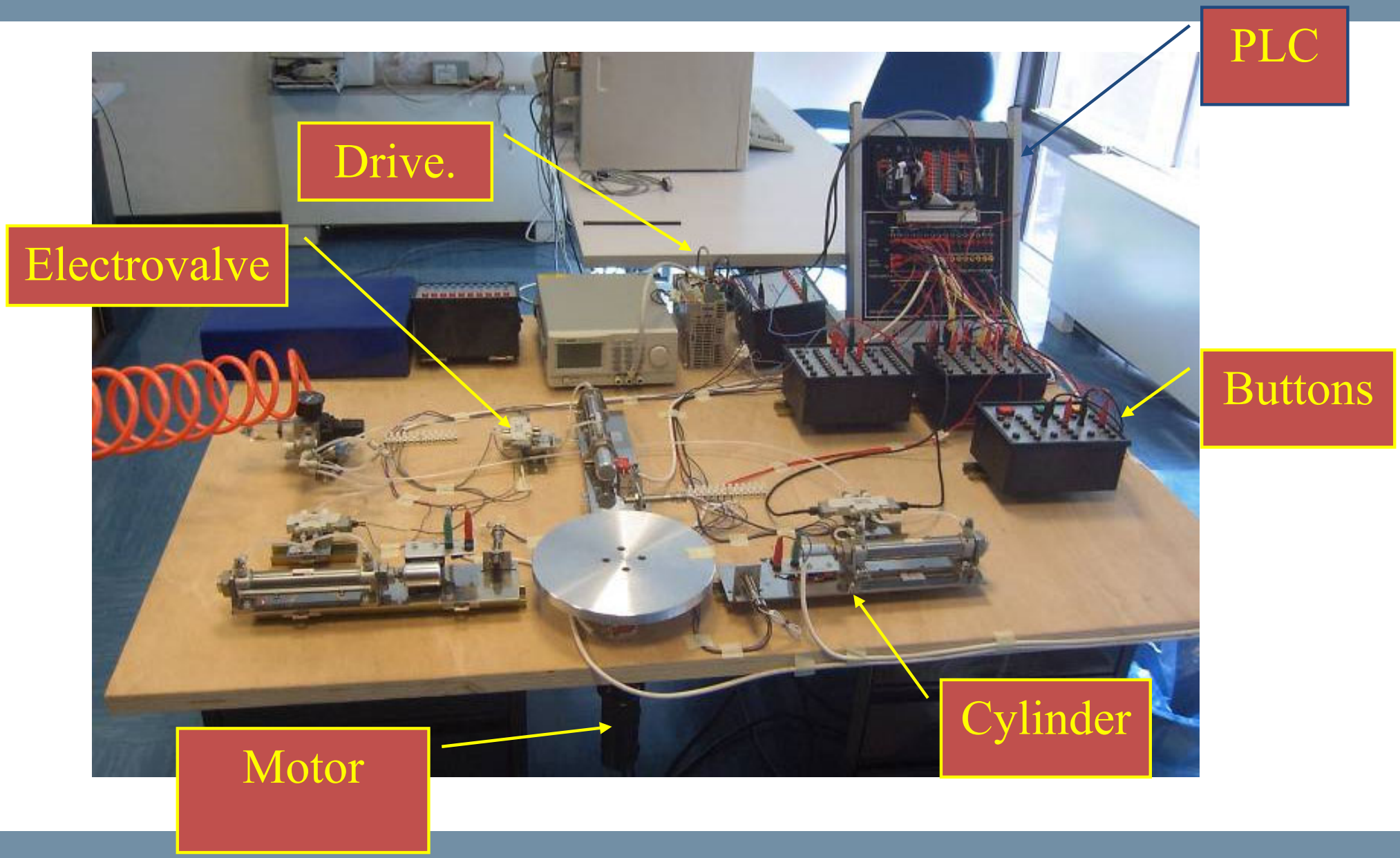

Control of electric drives and pneumatic actuators in an automated plant

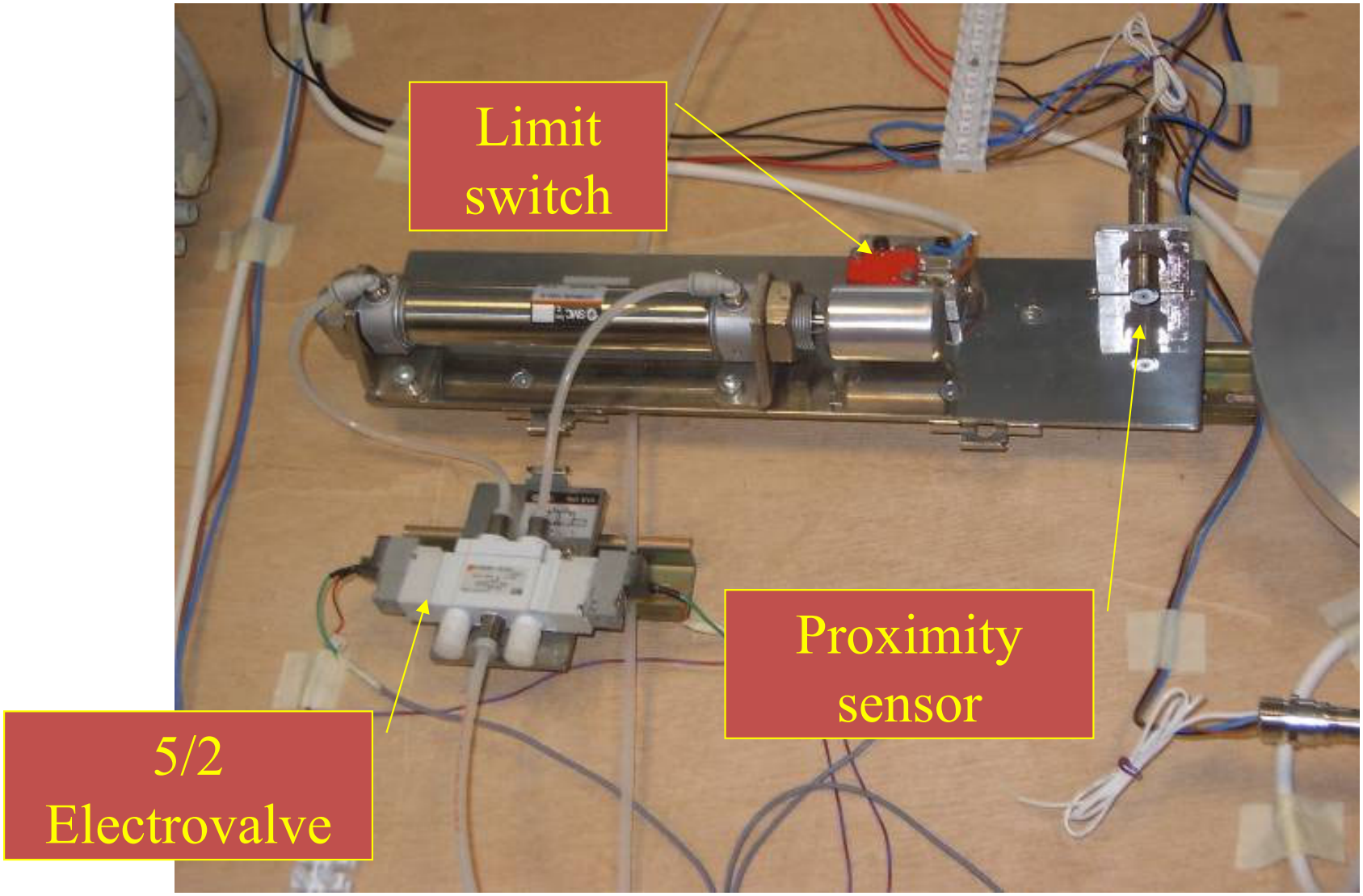

Control of electric drives and pneumatic actuators in an automated plant

5/2
Electrovalve

Control of electric drives and pneumatic actuators in an automated plant

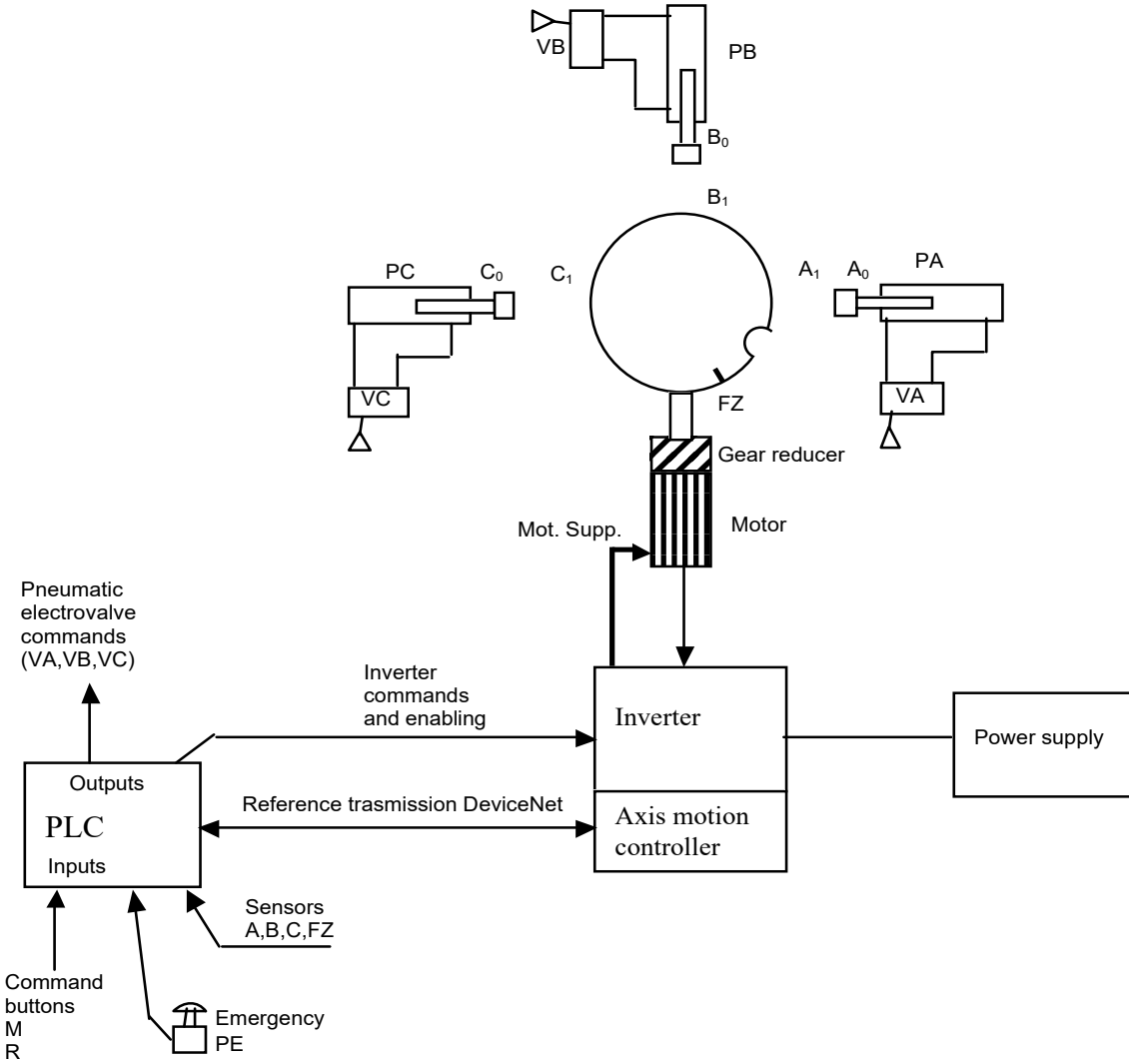

Control of electric drives and pneumatic actuators in an automated plant

The system is made up with industrial components:

- Electrical drive: industrial inverter + direct drive brushless motor;
- Software environment for the interface with the inverter, equipped with a data acquisition system;
- Programmable axis motion controller with developing environment;
- PLC (programmable logic controller) with interfacing and programming software;
- 3 pneumatic cylinders (2 double effect and 1 single effect), electrovalves and proximity sensors.

Modelling and control approaches

- The system and the control evolve through discrete events.
- Possible modelling option:
  - finite state automaton (finite state machine)
  - Petri net
  - Flow diagram
  - SFC (Sequential Functional Chart aka GRAFCET)
  - other forms

Control of electric drives and pneumatic actuators in an automated plant – suggested developments

PLC side

- Definition and preliminary description of the basic control logic:

  0->A->B->C with actuator operations
- Accurate description of the sequence and modelling.
- Characterisation of the command outputs and of the sensor and command signals
- Implementation of the logics on the PLC (ladder diagram/ structure text /any of IEC 61131)
- Addition of all the safety features (obstacle detector and emergency stop)
- Definition and implementation of advanced control logic, with the possibility to define different working loops

Control of electric drives and pneumatic actuators in an automated plant – suggested develompents

Electric drive side

- Calibration of the speed control loop, through comparison with a Matlab/simulink model and/or experimental optimisation

Available experiences:

1. Automation of an elevator plant
2. Control of electric drives and pneumatic actuators in an automated plant
3. **Automation of a storage warehouse**
4. Control of a PMDC – PMDC system
5. Control of a PMSM – PMDC system
6. Control of linear vibrations
7. Industrial plant
8. Control of a linear pendulum
9. Control of a rotational pendulum I
10. Control of a rotational pendulum II
11. Control of a reaction pendulum
12. 2D ball balancing
13. Maglev
14. Magnetic bearing (Maglev 2)
15. Quanser Aero
16. Quadcopter

Automation of a storage warehouse

- Small scale model of a storage warehouse with 3x3 storage places
- Typical example of discrete event system to be controlled
- The control system is based on a PLC (ABB)
- The motion actuations are electromechanical (on/off)
- The control typology can be developed through increasing complexity levels.

Automation of a storage warehouse

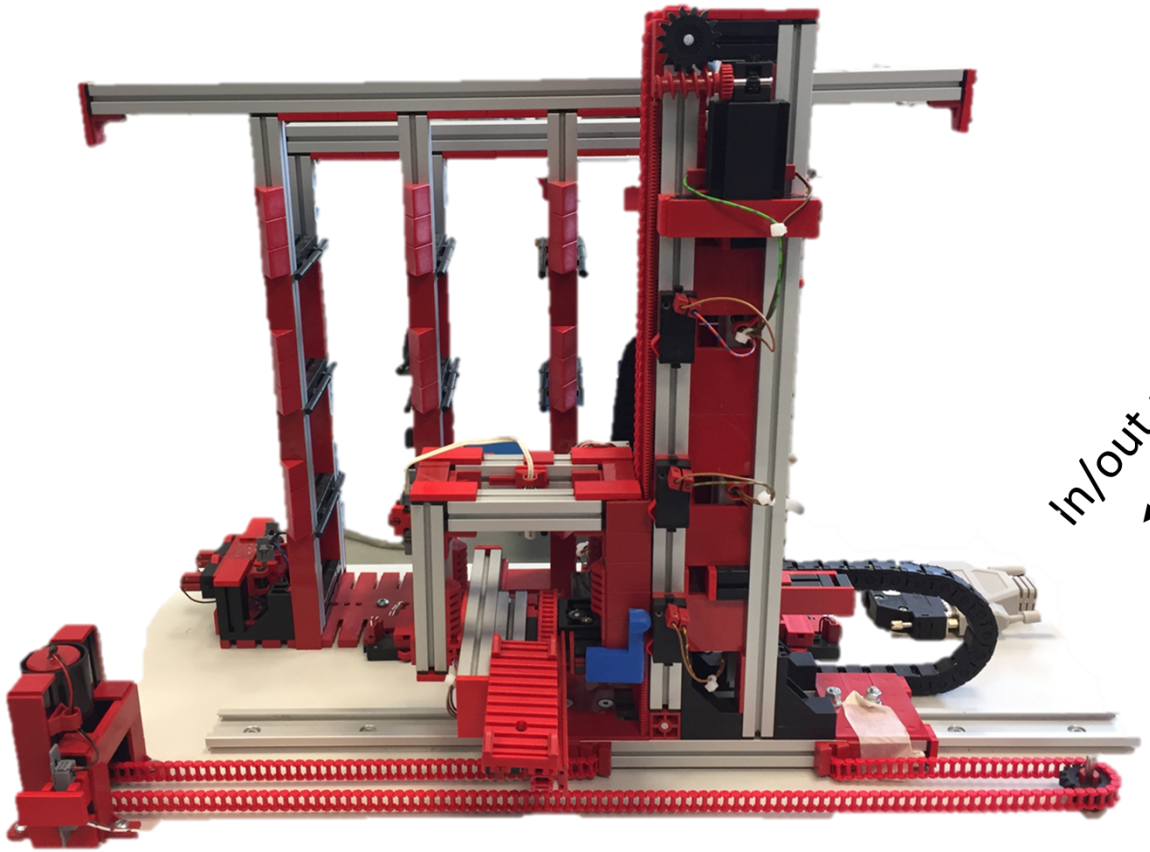

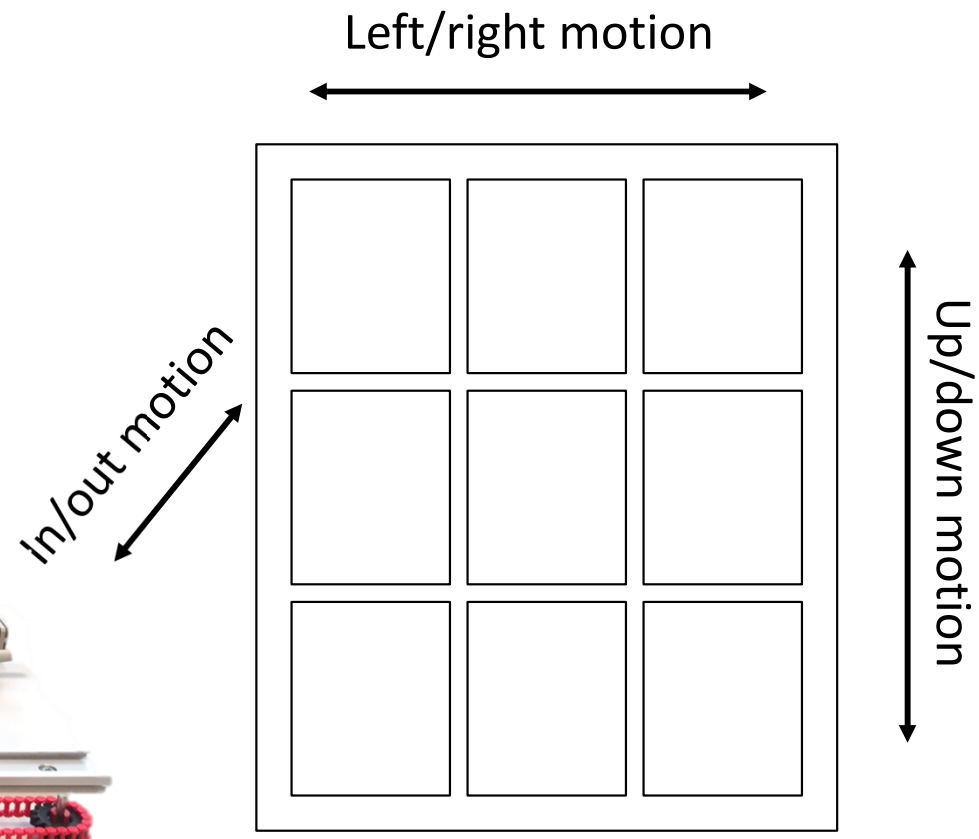

Switches defining position and pallet presence (in storage places/ on the carrier)

Modelling and control approaches

- The system and the control evolve through discrete events.
- Possible modelling option:
  - finite state automaton (finite state machine)
  - Petri net
  - Flow diagram
  - SFC (Sequential Functional Chart aka GRAFCET)
  - other forms

Automation of a storage warehouse

- Definition and preliminary description of two basic control logics:
  a) Simple storage/withdraw
  b) Complex management of pallets with user defined sequences (and sequence optimisation)

- Accurate description of the sequences and modelling.
- Characterisation of the command outputs and of the sensor and command signals (level and car calls)
- Implementation of the two logics a) and b) on the PLC (ladder diagram/ structure text /any of IEC 61131)
- Addition of all the safety features

Available experiences:

1. Automation of an elevator plant
2. Control of electric drives and pneumatic actuators in an automated plant
3. Automation of a storage warehouse
4. **Control of a PMDC – PMDC system**
5. Control of a PMSM – PMDC system
6. Control of linear vibrations
7. Industrial plant
8. Control of a linear pendulum
9. Control of a rotational pendulum I
10. Control of a rotational pendulum II
11. Control of a reaction pendulum
12. 2D ball balancing
13. Maglev
14. Magnetic bearing (Maglev 2)
15. Quanser Aero
16. Quadcopter

Control of a PMDC-PMDC back-to-back setup

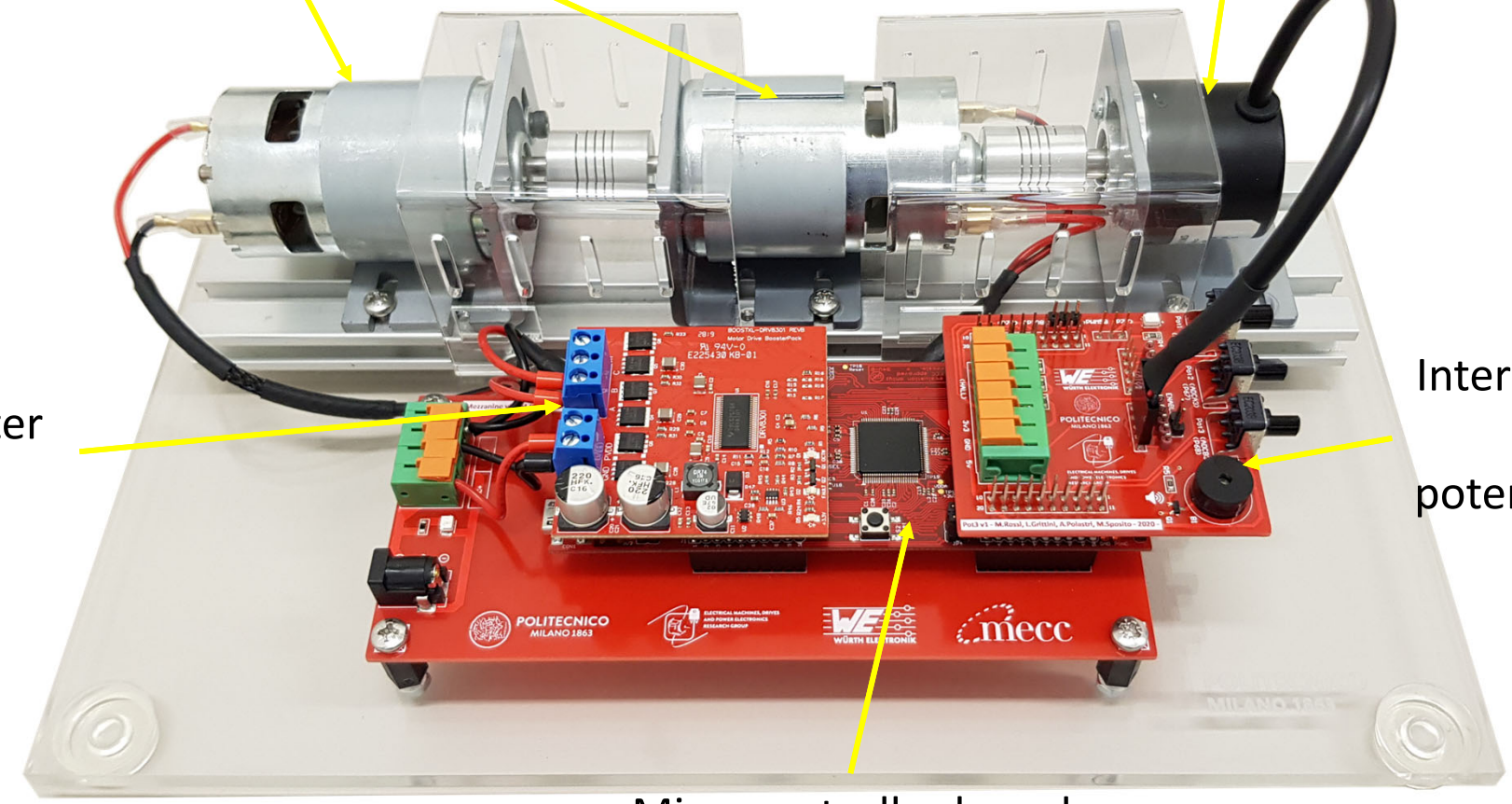

Control of a PMDC-PMDC back-to-back setup – suggested steps

- Identification of the system parameters.
- Implementation of Matlab/Simulink simulation model, comprehensive of the board+inverter model
- Implementation and tuning of the current and speed loops (classical solution with PI-PI nested loops) with or without feed-forward on the current loop for the traction motor.
- Implementation and tuning of the current loop for the brake motor
- Control of the whole back-to-back setup (i.e., speed control with different loading conditions)
- Sensorless control of the back-to-back setup

Available experiences:

1. Automation of an elevator plant
2. Control of electric drives and pneumatic actuators in an automated plant
3. Automation of a storage warehouse
4. Control of a PMDC – PMDC system
5. **Control of a PMSM – PMDC system**
6. Control of linear vibrations
7. Industrial plant
8. Control of a linear pendulum
9. Control of a rotational pendulum
10. Control of a reaction pendulum
11. 2D ball balancing
12. Maglev
13. Magnetic bearing (Maglev 2)
14. Quanser Aero
15. Quadcopter

Control of a PMSM-PMDC back-to-back setup

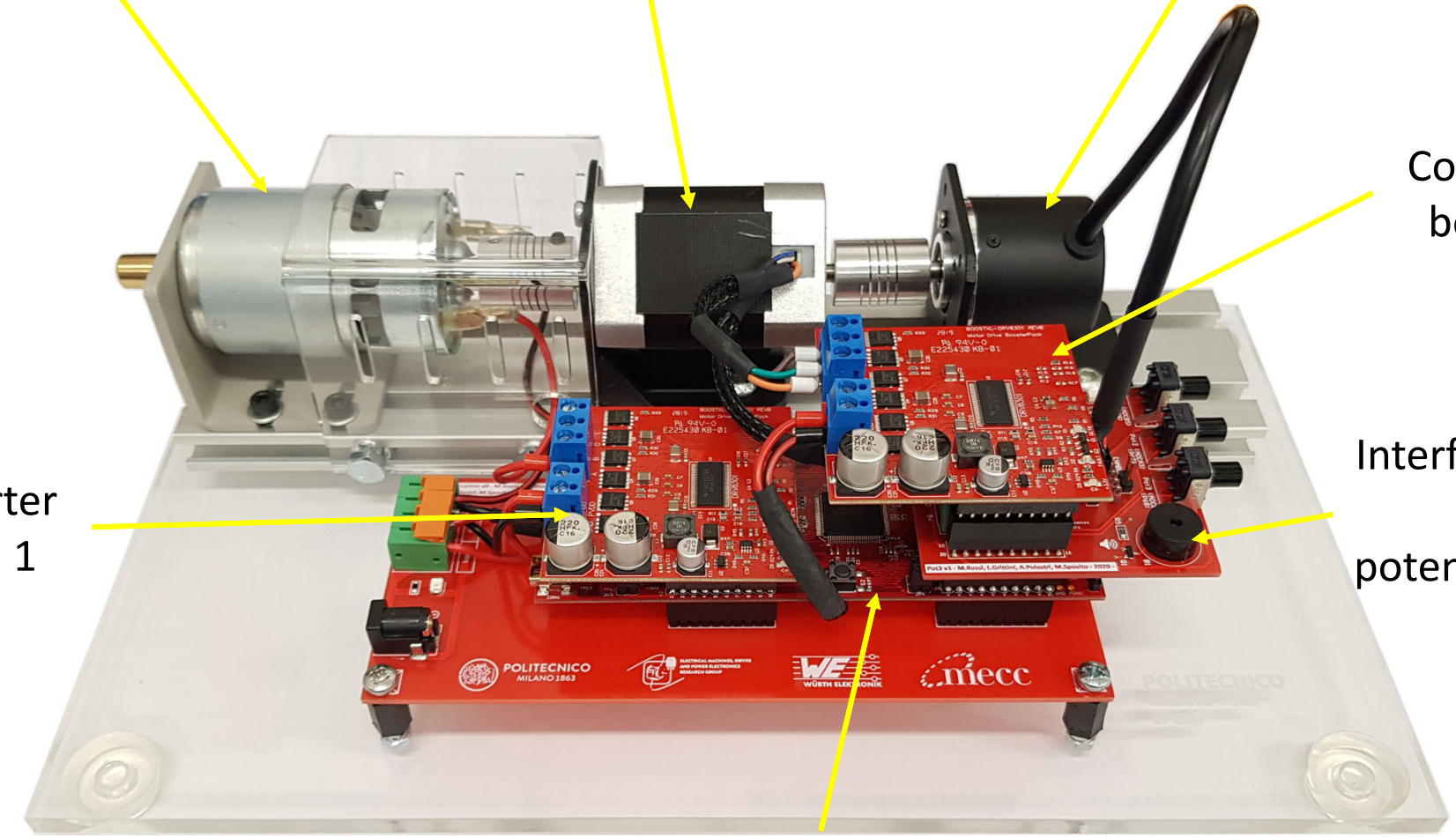

Control of a PMSM-PMDC back-to-back setup

Suggested steps

- Identification of the system parameters.
- Implementation of Matlab/Simulink simulation model, comprehensive of the board+inverter model
- Implementation and tuning of the speed control algorithm for the PMSM (traction motor). Consider both ac or dc brushless control strategies.
- Implementation and tuning of the current loop for the brake PMDC motor
- Control of the whole back-to-back setup (i.e., speed control with different loading conditions)

Model of the PMSM

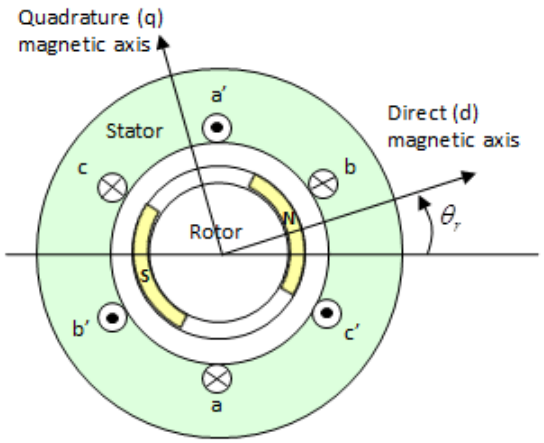

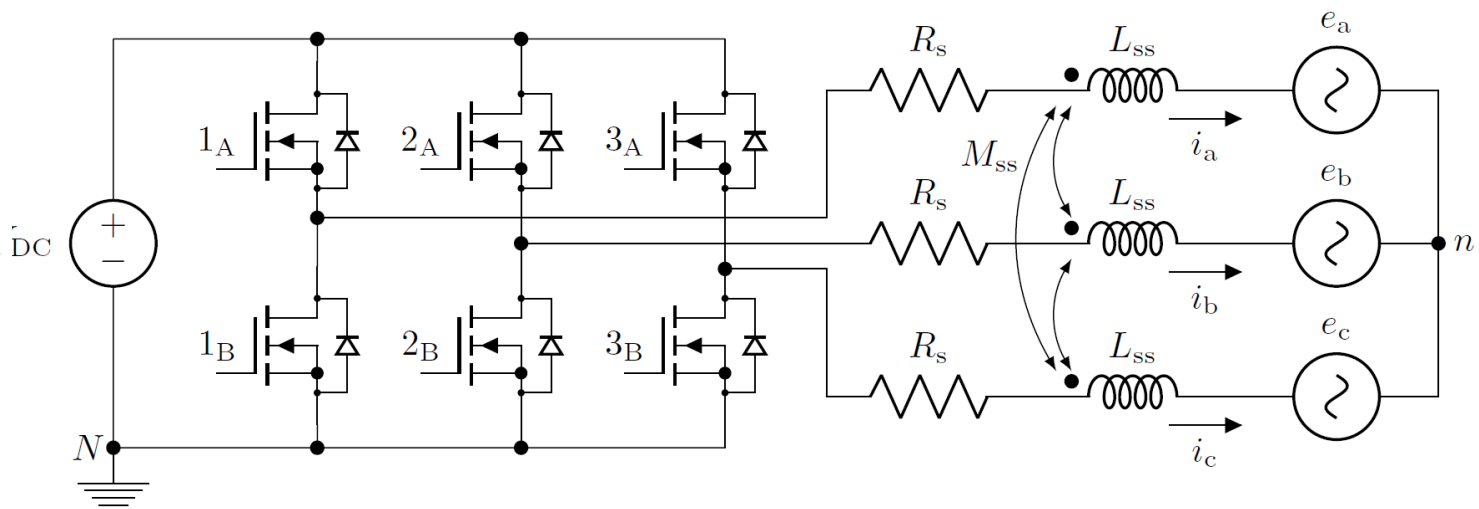

Electrical equations

$$
\begin{aligned}
v_a &= R_s i_a + p\phi_a \\
v_b &= R_s i_b + p\phi_b \\
v_c &= R_s i_c + p\phi_c \\
\phi_a &= L_{ss}(\theta_m) i_a + M_{ss}(\theta_m) i_b + M_{ss}(\theta_m - \tfrac{2}{3}\pi) i_c + \phi_{PM}(\theta_m) \\
\phi_b &= M_{ss}(\theta_m) i_a + L_{ss}(\theta_m - \tfrac{2}{3}\pi) i_b + M_{ss}(\theta_m + \tfrac{2}{3}\pi) i_c + \phi_{PM}(\theta_m - \tfrac{2}{3}\pi) \\
\phi_c &= M_{ss}(\theta_m - \tfrac{2}{3}\pi) i_a + M_{ss}(\theta_m + \tfrac{2}{3}\pi) i_b + L_{ss}(\theta_m + \tfrac{2}{3}\pi) i_c + \phi_{PM}(\theta_m + \tfrac{2}{3}\pi)
\end{aligned}
\xrightarrow{i_a + i_b + i_c = 0}
\begin{aligned}
v_a &= R_s i_a + p\phi_a \\
v_b &= R_s i_b + p\phi_b \\
v_c &= R_s i_c + p\phi_c \\
\phi_a &= L_s i_a + \phi_{PM}(\theta_m) \\
\phi_b &= L_s i_b + \phi_{PM}(\theta_m - \tfrac{2}{3}\pi) \\
\phi_c &= L_s i_c + \phi_{PM}(\theta_m + \tfrac{2}{3}\pi)
\end{aligned}
$$

with

$$
p = \frac{d}{dt}
$$

$$
L_s = L_{ss} - M_{ss}
$$

Model of the PMSM: AC brushless strategy

Park transformation is applied to the electrical variables

$$\mathbf{T}(\theta_m) = \sqrt{\frac{2}{3}} \begin{bmatrix} \cos(\theta_m) & \cos\left(\theta_m - \frac{2}{3}\pi\right) & \cos\left(\theta_m + \frac{2}{3}\pi\right) \\ -\sin(\theta_m) & -\sin\left(\theta_m - \frac{2}{3}\pi\right) & -\sin\left(\theta_m + \frac{2}{3}\pi\right) \\ 1/\sqrt{2} & 1/\sqrt{2} & 1/\sqrt{2} \end{bmatrix}$$

$$\begin{bmatrix} v_\mathrm{d} \\ v_\mathrm{q} \\ v_0 \end{bmatrix} = \mathbf{T}(\theta_m) \begin{bmatrix} v_\mathrm{a} \\ v_\mathrm{b} \\ v_\mathrm{c} \end{bmatrix}$$

$$\begin{bmatrix} i_\mathrm{d} \\ i_\mathrm{q} \\ i_0 \end{bmatrix} = \mathbf{T}(\theta_m) \begin{bmatrix} i_\mathrm{a} \\ i_\mathrm{b} \\ i_\mathrm{c} \end{bmatrix}$$

$$\begin{bmatrix} \phi_\mathrm{d} \\ \phi_\mathrm{q} \\ \phi_0 \end{bmatrix} = \mathbf{T}(\theta_m) \begin{bmatrix} \phi_\mathrm{a} \\ \phi_\mathrm{b} \\ \phi_\mathrm{c} \end{bmatrix}$$

Therefore

$$\begin{aligned} v_\mathrm{d} &= R_\mathrm{s} i_\mathrm{d} + p\phi_\mathrm{d} - n_p \Omega \phi_\mathrm{q} \\ v_\mathrm{q} &= R_\mathrm{s} i_\mathrm{q} + p\phi_\mathrm{q} + n_p \Omega \phi_\mathrm{d} \\ \phi_\mathrm{d} &= L_\mathrm{s} i_\mathrm{d} + \phi_\mathrm{PM} \\ \phi_\mathrm{q} &= L_\mathrm{s} i_\mathrm{q} \end{aligned}$$

Mechanical equations

$$\begin{aligned} J_\mathrm{eq} p\Omega + \beta\Omega &= m_e - m_l \\ m_e &= n_p \phi_\mathrm{PM} i_\mathrm{q} \end{aligned}$$

Control of the PMSM: AC brushless strategy

$$v_\mathrm{d} = R_\mathrm{s} i_\mathrm{d} + p\phi_\mathrm{d} - n_p \Omega \phi_\mathrm{q}$$
$$v_\mathrm{q} = R_\mathrm{s} i_\mathrm{q} + p\phi_\mathrm{q} + n_p \Omega \phi_\mathrm{d}$$
$$\phi_\mathrm{d} = L_\mathrm{s} i_\mathrm{d} + \phi_\mathrm{PM}$$
$$\phi_\mathrm{q} = L_\mathrm{s} i_\mathrm{q}$$
$$J_\mathrm{eq} p\Omega + \beta\Omega = m_e - m_l$$
$$m_e = n_p \phi_\mathrm{PM} i_\mathrm{q}$$

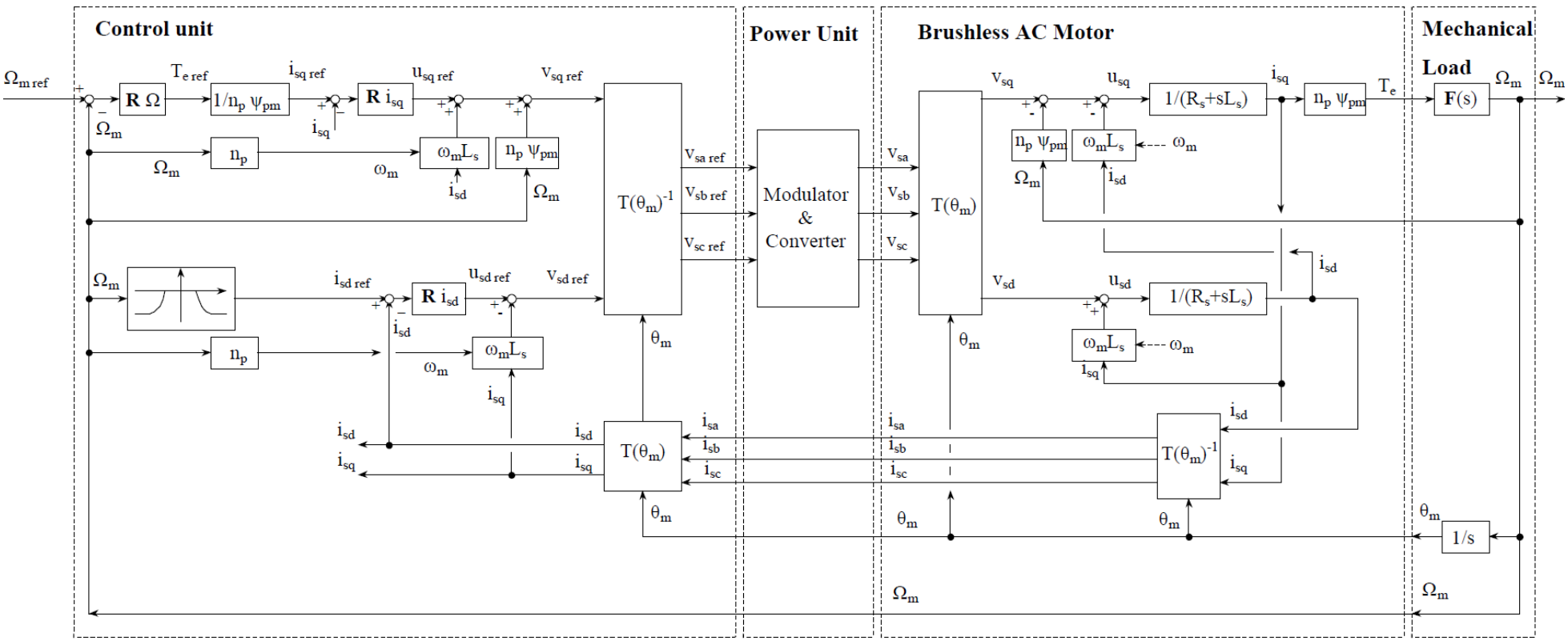

Control of the PMSM: DC brushless strategy

$$v_a = R_s i_a + p\phi_a$$
$$v_b = R_s i_b + p\phi_b$$
$$v_c = R_s i_c + p\phi_c$$
$$\phi_a = L_s i_a + \phi_{PM}(\theta_m)$$
$$\phi_b = L_s i_b + \phi_{PM}(\theta_m - \tfrac{2}{3}\pi)$$
$$\phi_c = L_s i_c + \phi_{PM}(\theta_m + \tfrac{2}{3}\pi)$$
$$J_{eq} p\Omega + \beta\Omega = m_e - m_l$$
$$m_e = 2k_e I_{dc}$$

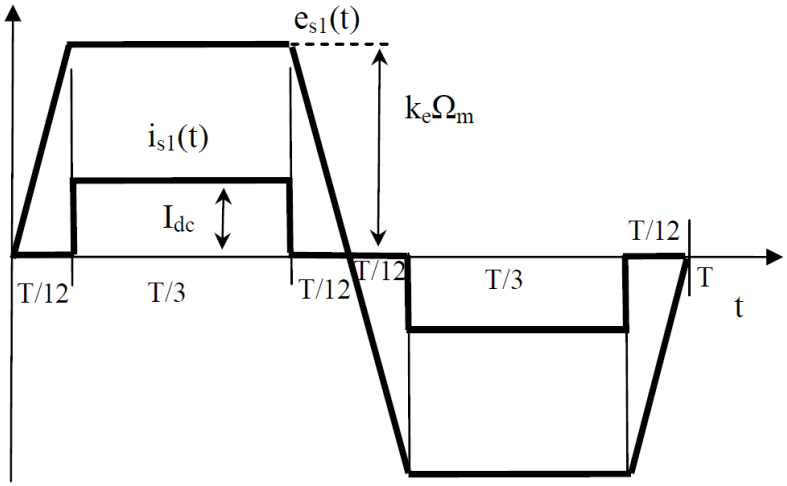

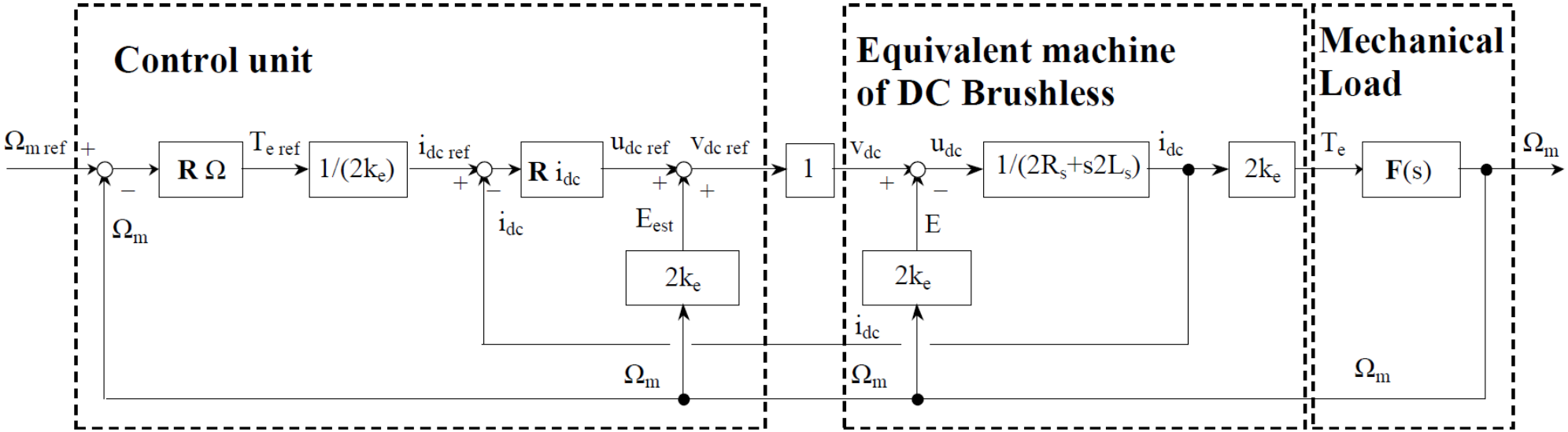

Available experiences:

1. Automation of an elevator plant
2. Control of electric drives and pneumatic actuators in an automated plant
3. Automation of a storage warehouse
4. Control of a PMDC – PMDC system
5. Control of a PMSM – PMDC system
6. **Control of linear vibrations**
7. Industrial plant
8. Control of a linear pendulum
9. Control of a rotational pendulum I
10. Control of a rotational pendulum II
11. Control of a reaction pendulum
12. 2D ball balancing
13. Maglev
14. Magnetic bearing (Maglev 2)
15. Quanser Aero
16. Quadcopter

Control of linear vibrations

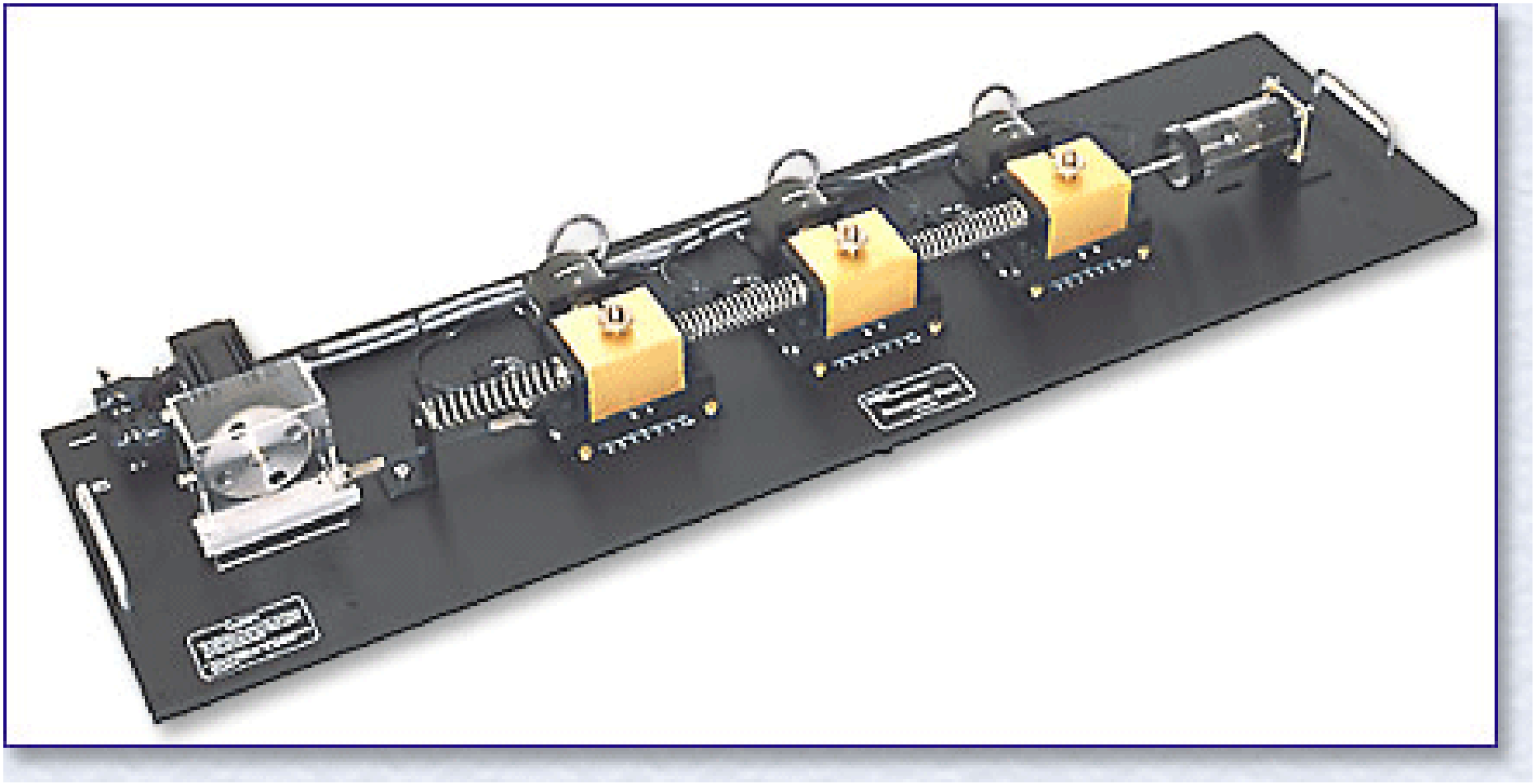

Control of linear vibrations

The system is composed by 3 masses and different springs for the connection to the ground or between the masses

By applying different connections 1, 2 and 3 DoF systems can be realised.

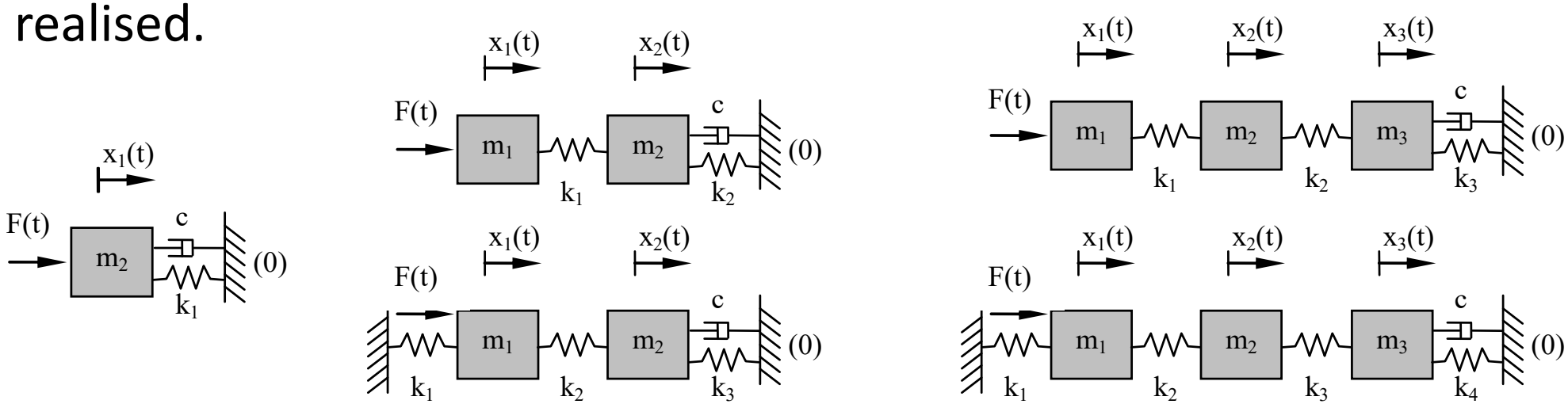

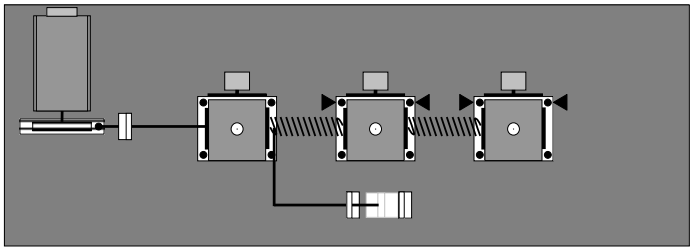

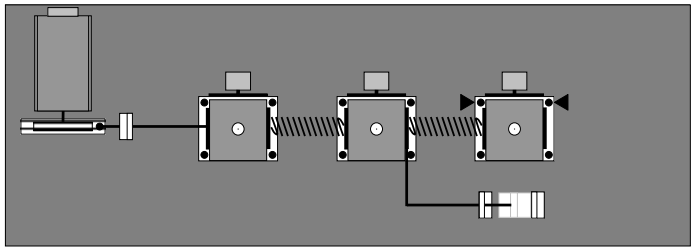

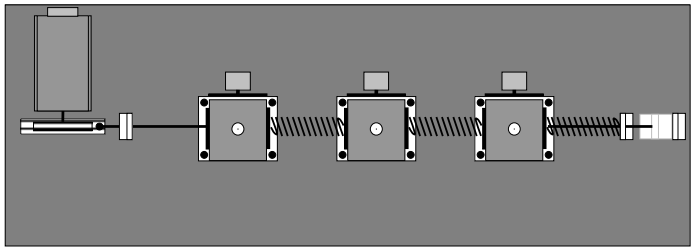

Control of linear vibrations

The inertia of the moving masses can be varied by changing the number of brass weights (500 ± 5g weight each).

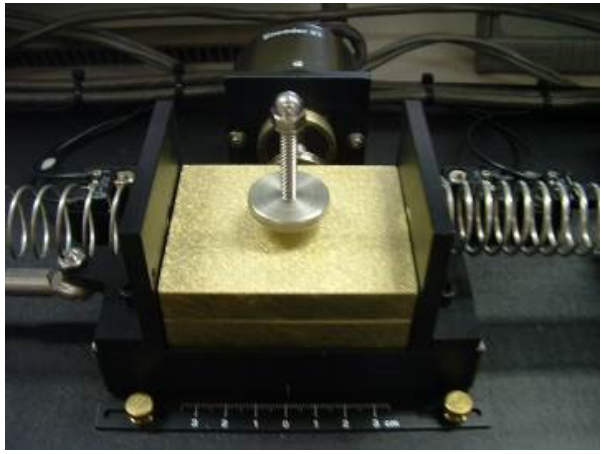

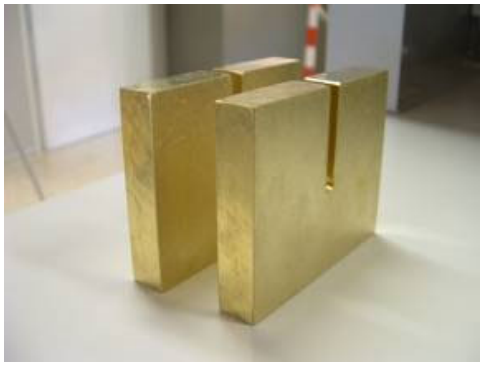

The bi-directional springs can be dismounted and changed. Springs with different stiffness are available.

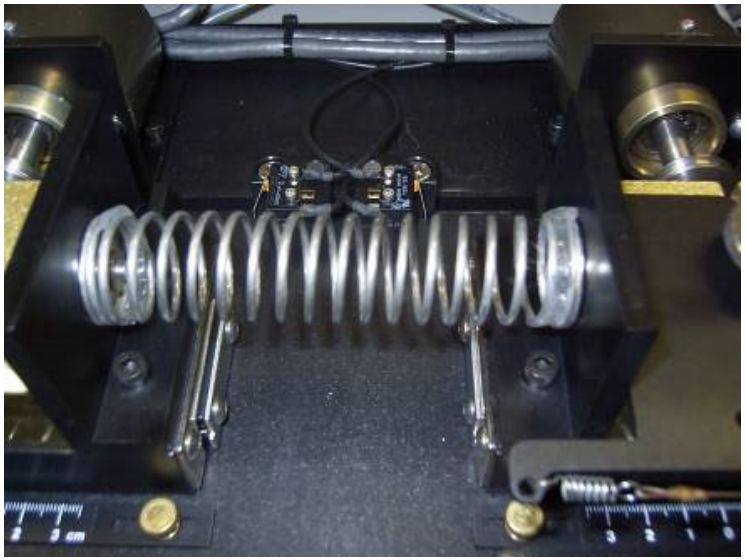

Control of linear vibrations

The linear drive is comprised of a gear rack suspended on an anti-friction carriage and a pinion (pitch diameter 7.62 cm (3.00 in)) coupled to the (DC) motor shaft. The carriage is rigidly connected to the first mass.

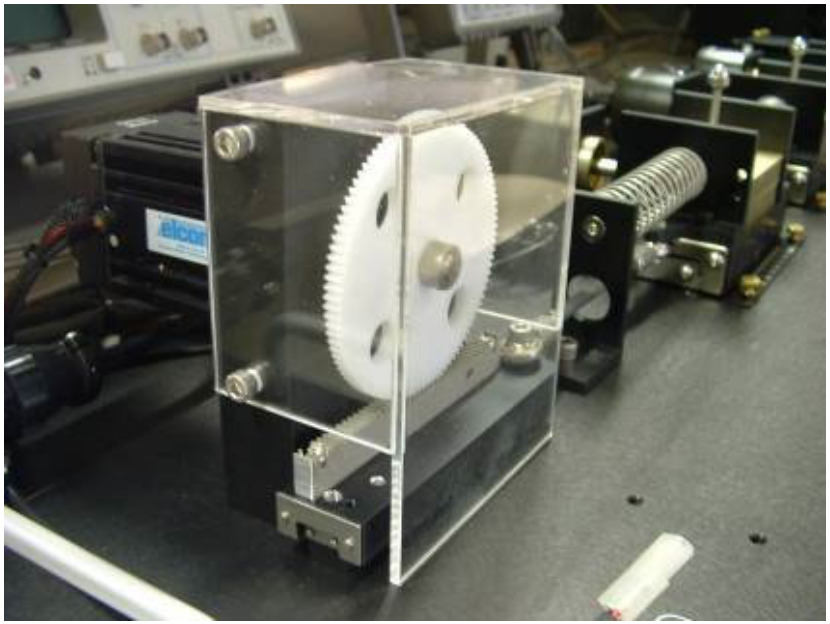

Optical encoders measure the mass carriage positions – through a capstan system, pinion pitch diameter 3.18 cm (1.25 in)

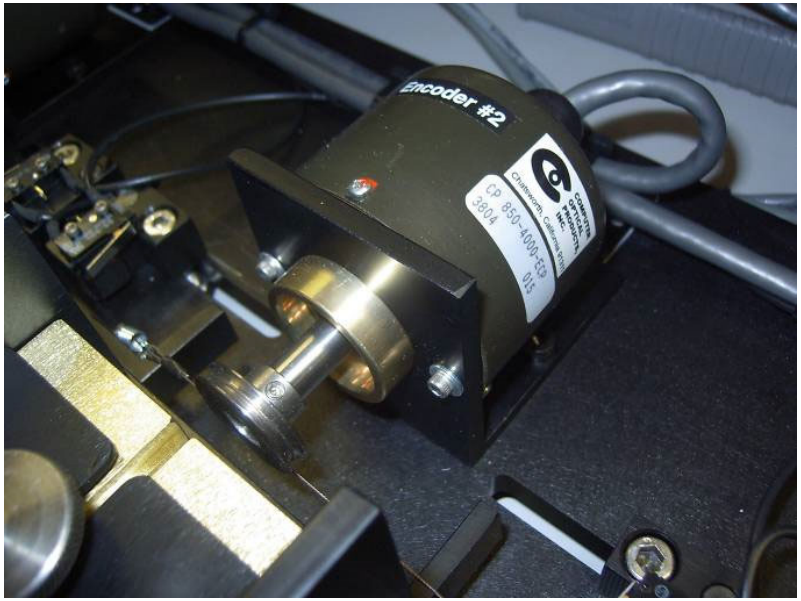

Control of linear vibrations

PoliArd Board allows to perform real-time control logics thanks to an Arduino Due board (32-bit ARM Cortex-M3).

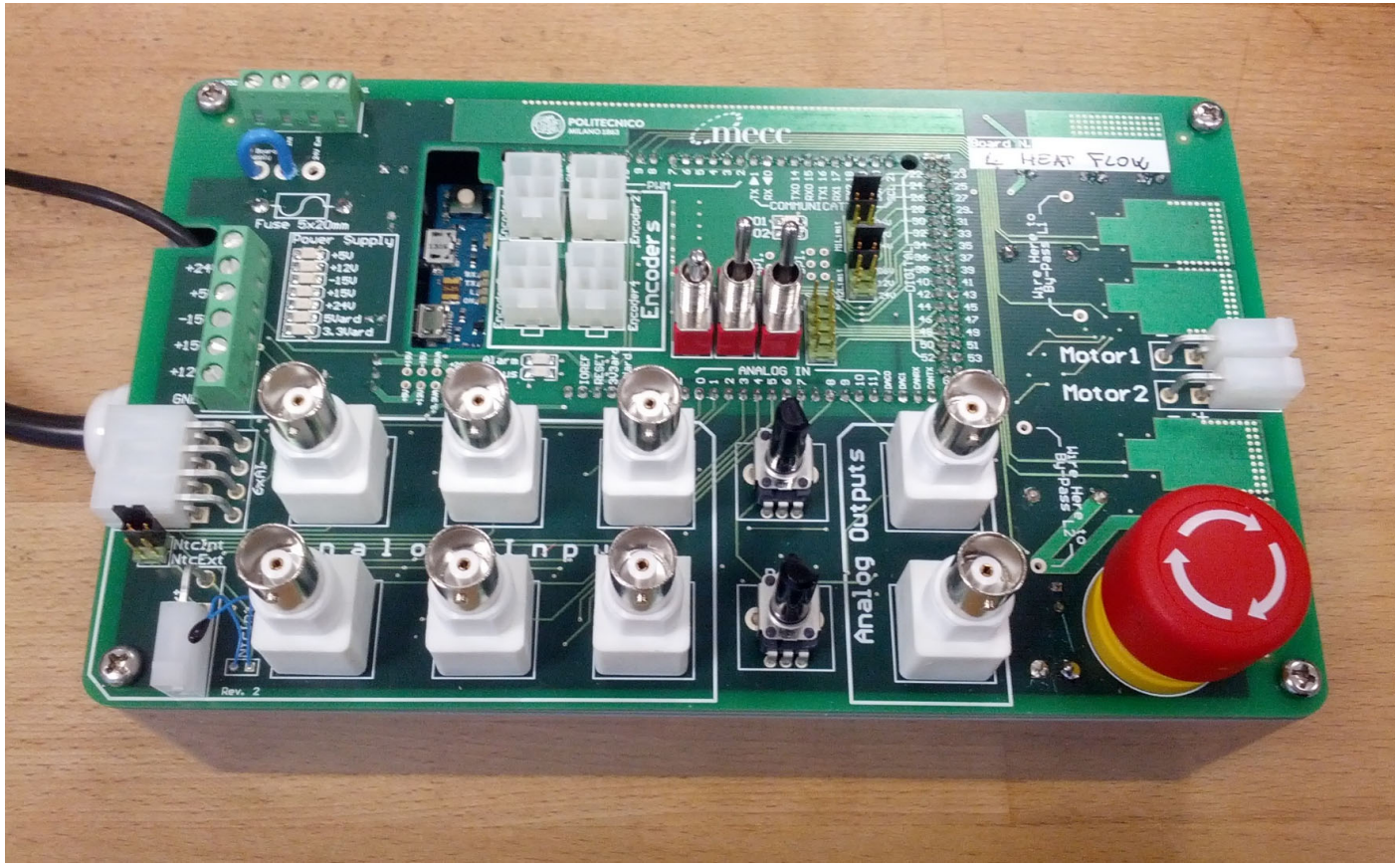

PoliArd Library (Matlab 2015a 64 bit)

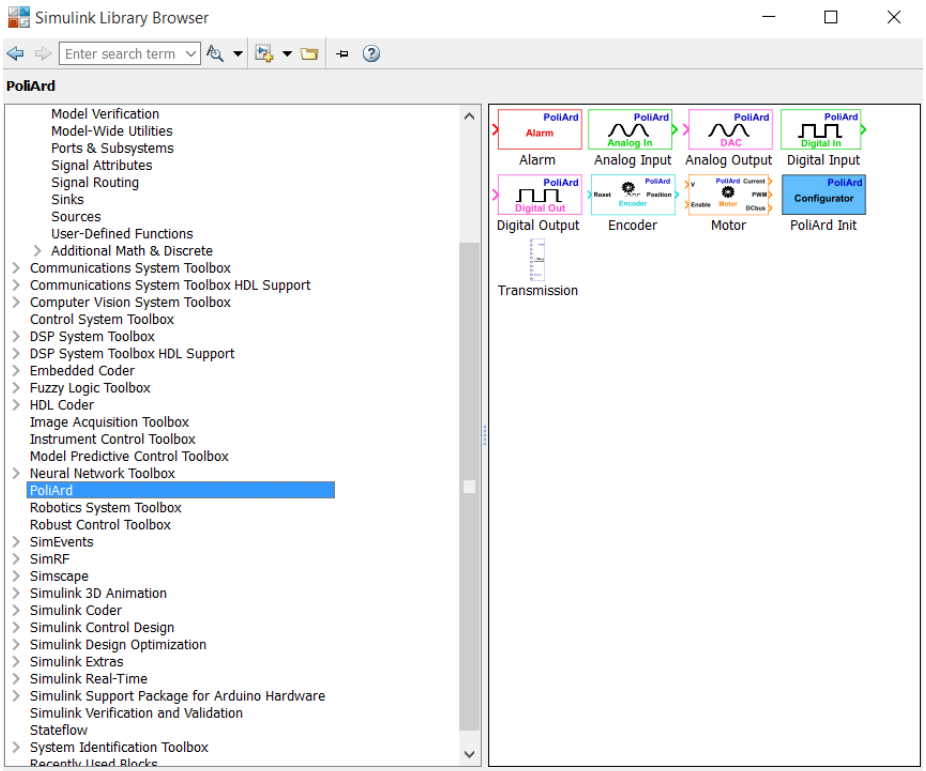

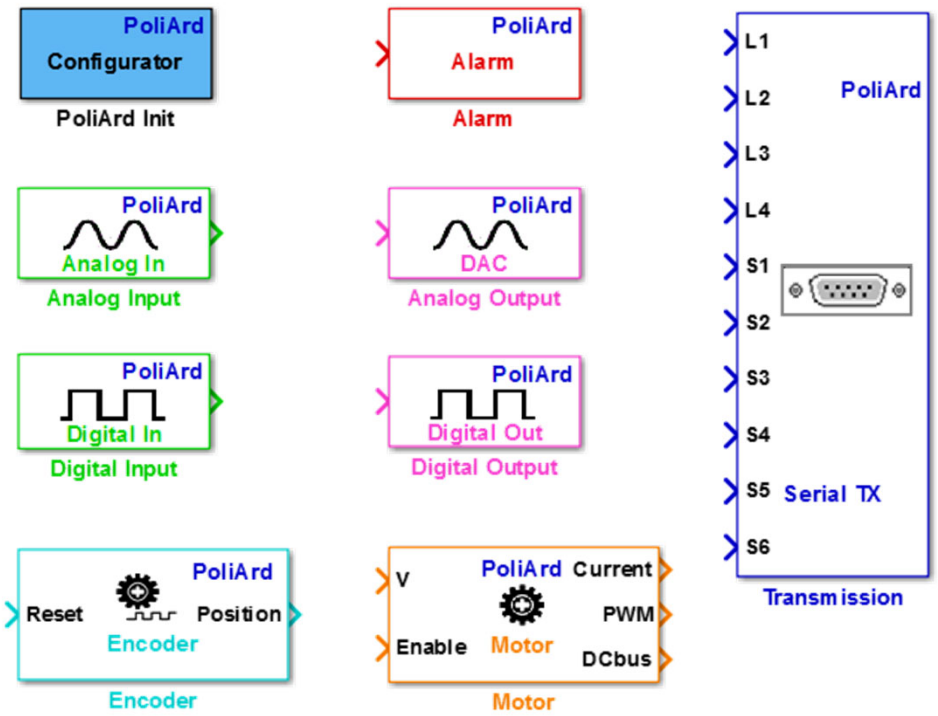

Control of linear vibrations

PoliArd Scope

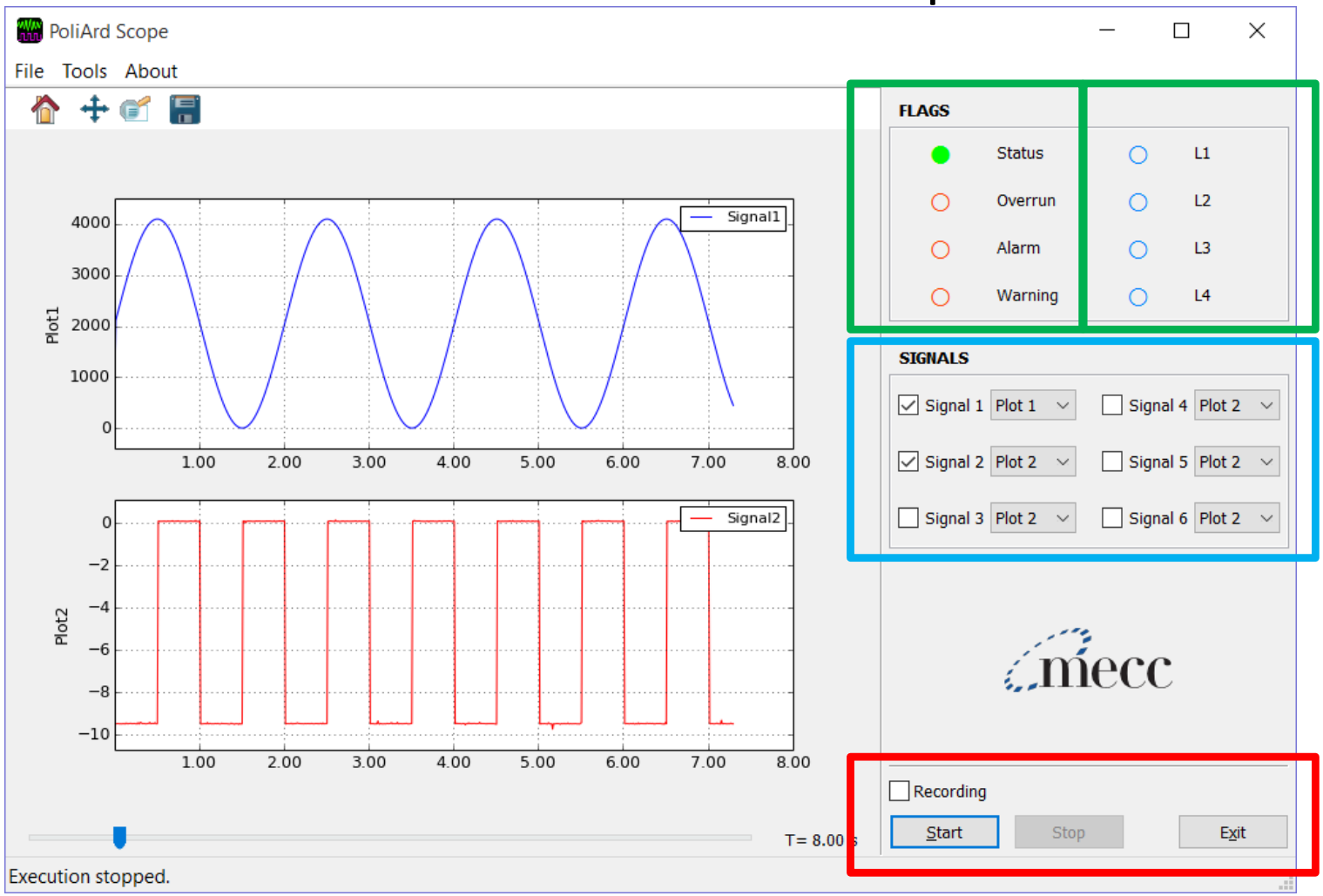

Boolean flags visualization

Float signals configuration

Acquisition controls

Control of linear vibrations – suggested steps

Consider different system configurations (with increasing difficulty levels). Steps for each subsystem:

1. Development of models for simulation (time domain) and for control synthesis and tuning (Laplace domain)
2. Identification of unknown parameters of the model/s
3. Numerical implementation and verification of different control logics (for position control of one of the masses) (classical control and modern control, if appl.)
4. Implementation of the control on the real system and comparison between numerical and experimental results (with possible optimisation of the control parameters for the real system)
5. Comparison of the performances of the different control logics/calibrations (robustness)

Available experiences:

1. Automation of an elevator plant
2. Control of electric drives and pneumatic actuators in an automated plant
3. Automation of a storage warehouse
4. Control of a PMDC – PMDC system
5. Control of a PMSM – PMDC system
6. Control of linear vibrations
7. **Industrial plant**
8. Control of a linear pendulum
9. Control of a rotational pendulum I
10. Control of a rotational pendulum II
11. Control of a reaction pendulum
12. 2D ball balancing
13. Maglev
14. Magnetic bearing (Maglev 2)
15. Quanser Aero
16. Quadcopter

Industrial plant

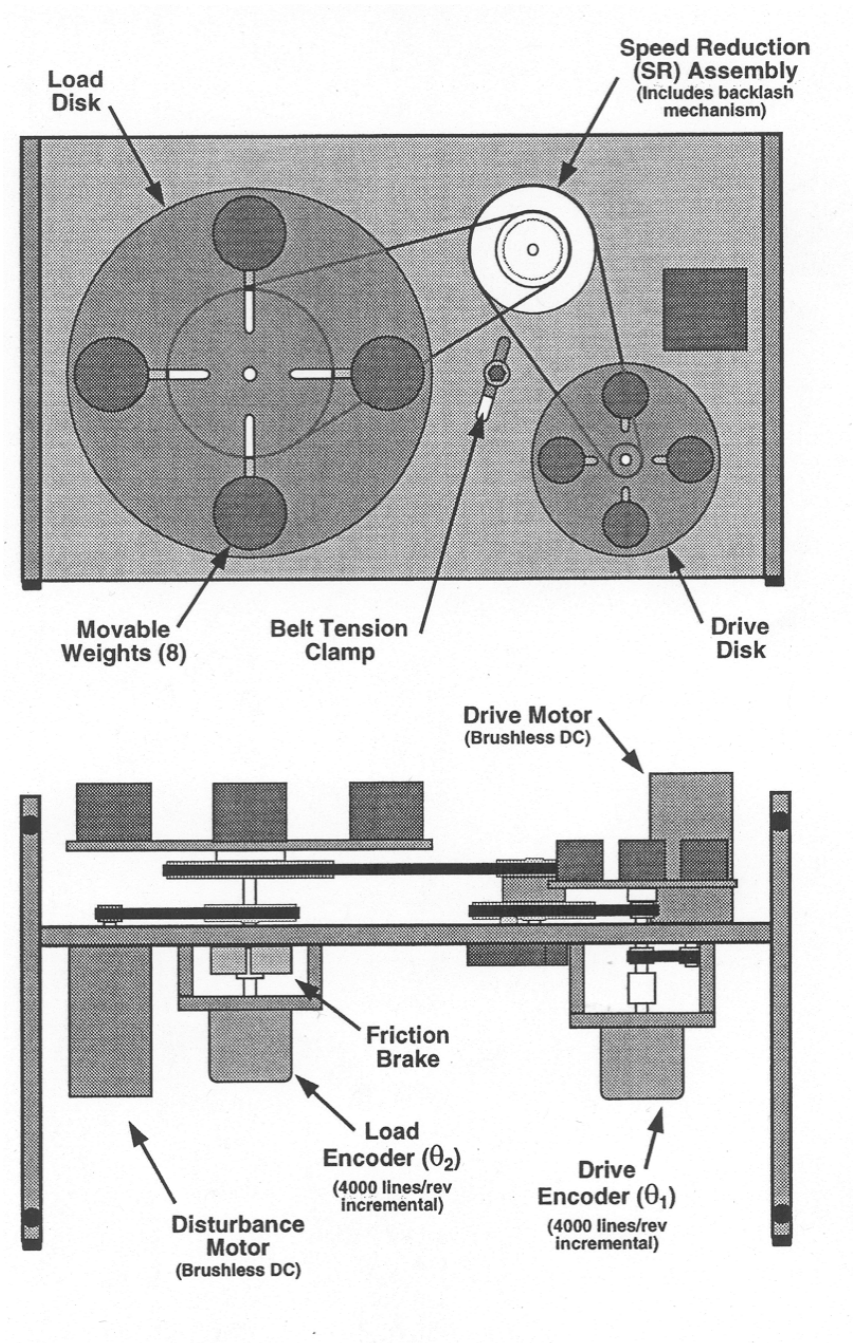

The system consists of a *drive motor* which is coupled via a timing belt to a *drive disk* with variable inertia. Another timing belt connects the drive disk to the *speed reduction (SR)* assembly while a third belt completes the drive train to the *load disk.* The load and drive disks have variable inertia which may be adjusted by moving (or removing) brass weights.

Speed reduction is adjusted by interchangeable belt pulleys in the SR assembly.

A disturbance motor is connected to the load to give any kind of resisting torque.

Industrial plant: overview

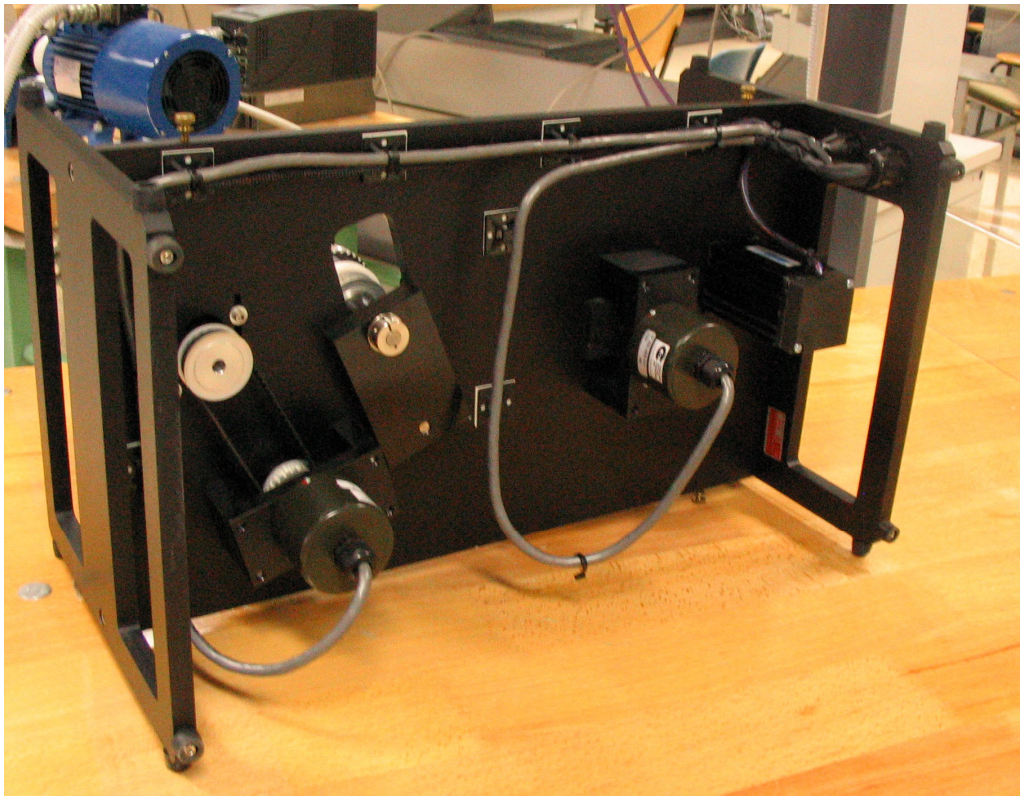

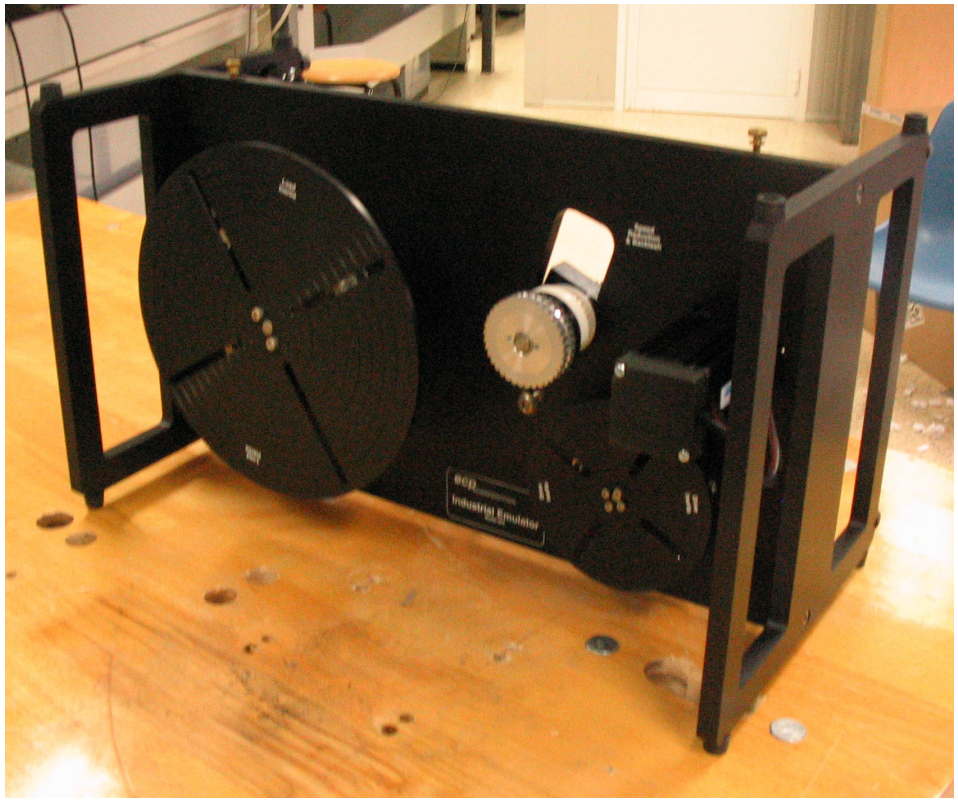

Industrial plant: overview

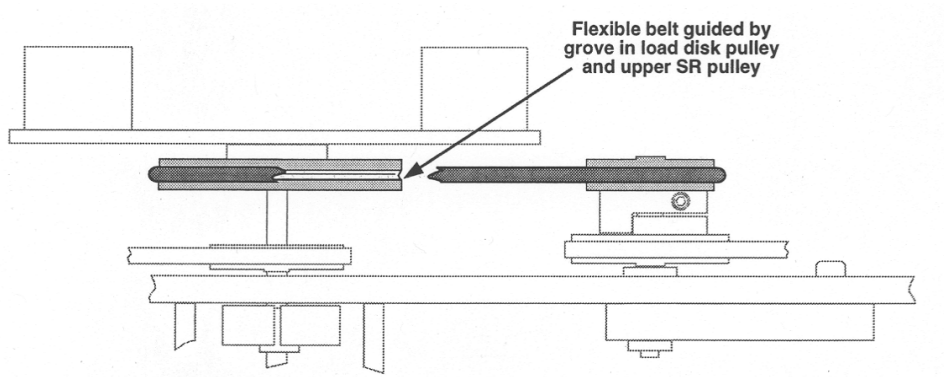

The belt connecting the speed reduction assembly and the drive disk can be rigid or flexible. Backlash may be introduced through a mechanism incorporated in the SR assembly.

1 dof system
The rotations are related through constant trasmission ratios.

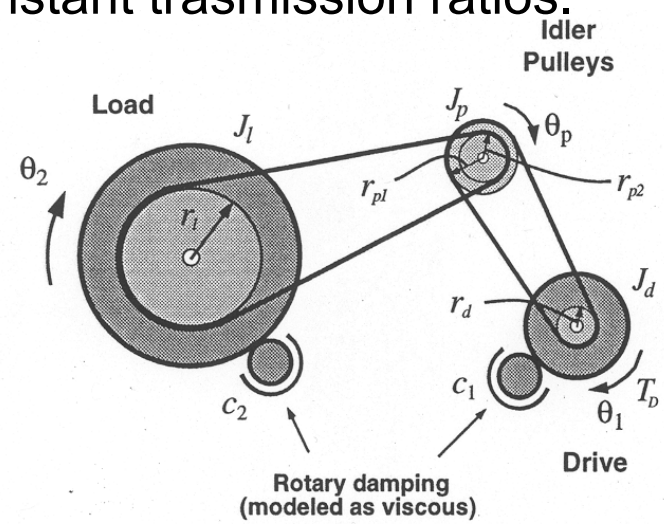

2 dof system
The rotations of the drive and of the load are independent.

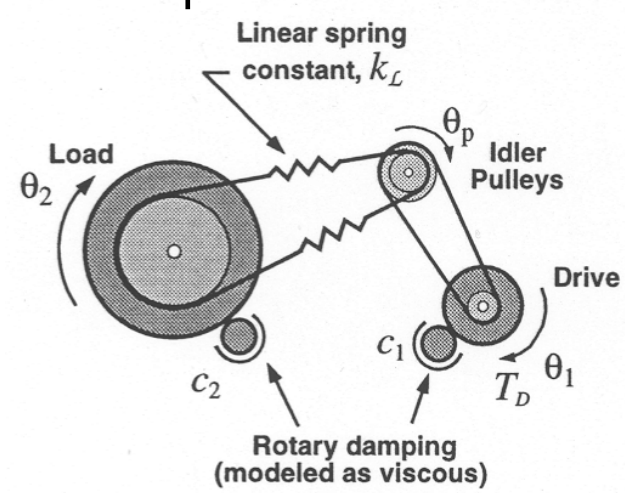

PoliArd board

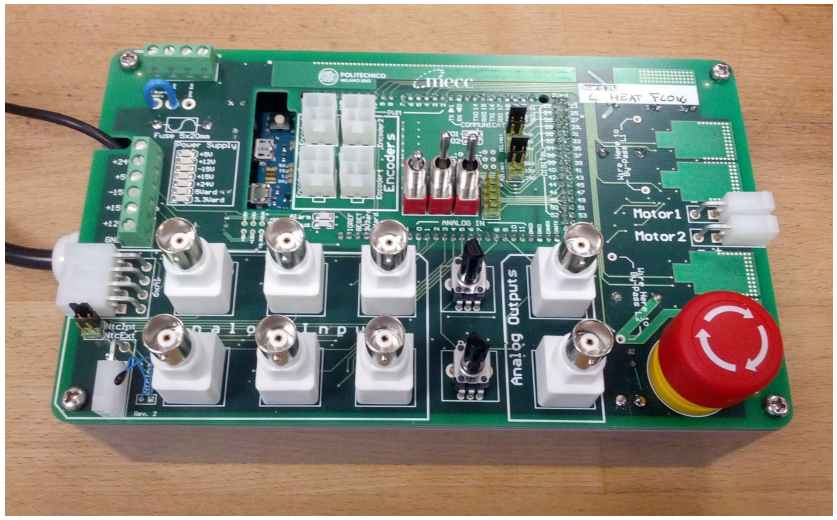

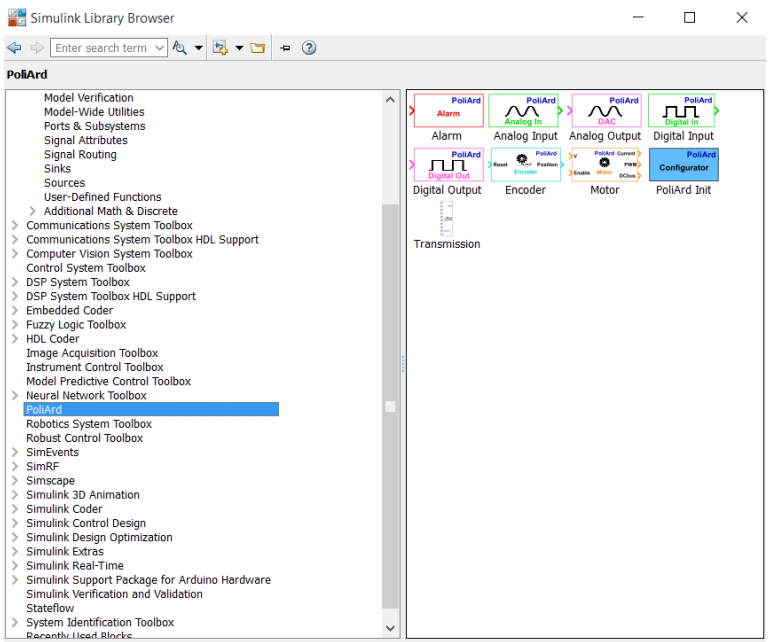

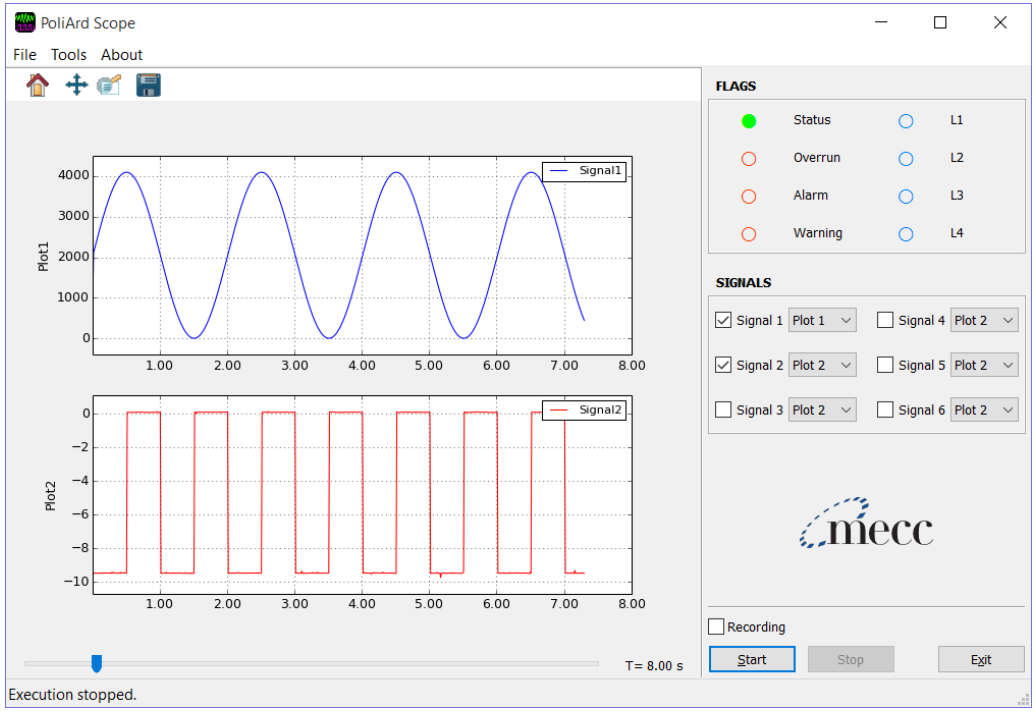

Execution steps

Consider different system configurations (with increasing difficulty levels). Steps for each subsystem:

1. Development of models for simulation (time domain) and for control synthesis and tuning (Laplace domain)
2. Identification of unknown parameters of the model/s
3. Numerical implementation and verification of different control logics (for position control of one of the masses) (classical control and modern control, if appl.)
4. Implementation of the control on the real system and comparison between numerical and experimental results (with possible optimisation of the control parameters for the real system)
5. Comparison of the performances of the different control logics/calibrations (robustness)
6. Development of a speed observer for the load disk

Available experiences:

1. Automation of an elevator plant
2. Control of electric drives and pneumatic actuators in an automated plant
3. Automation of a storage warehouse
4. Control of a PMDC – PMDC system
5. Control of a PMSM – PMDC system
6. Control of linear vibrations
7. Industrial plant
8. **Control of a linear pendulum**
9. Control of a rotational pendulum I
10. Control of a rotational pendulum II
11. Control of a reaction pendulum
12. 2D ball balancing
13. Maglev
14. Magnetic bearing (Maglev 2)
15. Quanser Aero
16. Quadcopter

Linear pendulum

Virtual also available?

The **linear pendulum** is composed of

- a **cart (1) connected with a belt to a motor** that moves along a linear guide
- a **pendulum (2)** hinged to the cart
- **two encoders** to measure the position of the cart and the angle of the pendulum

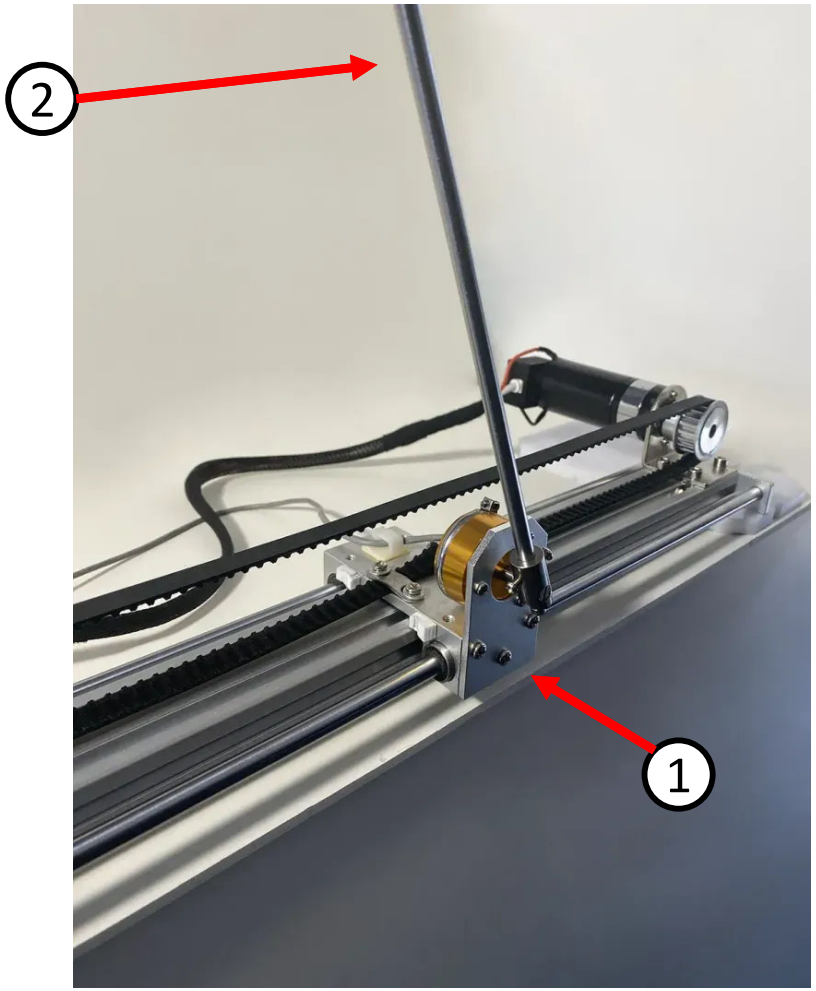

Linear pendulum

CONTROL GOAL

- Actuate the cart to control the pendulum in its two equilibrium points

Stable

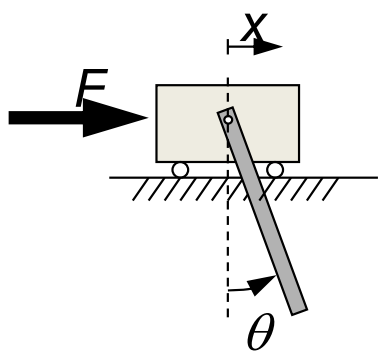

Unstable

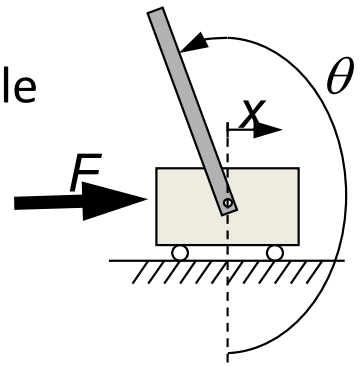

- Swing the pendulum up

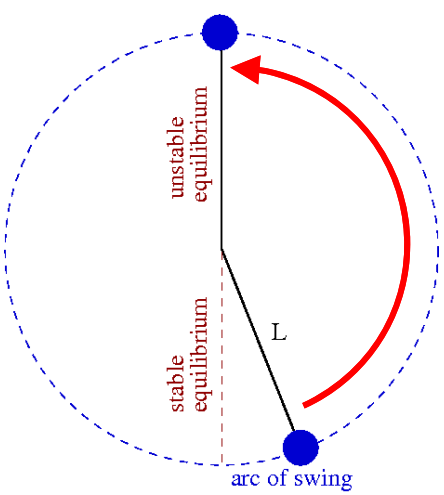

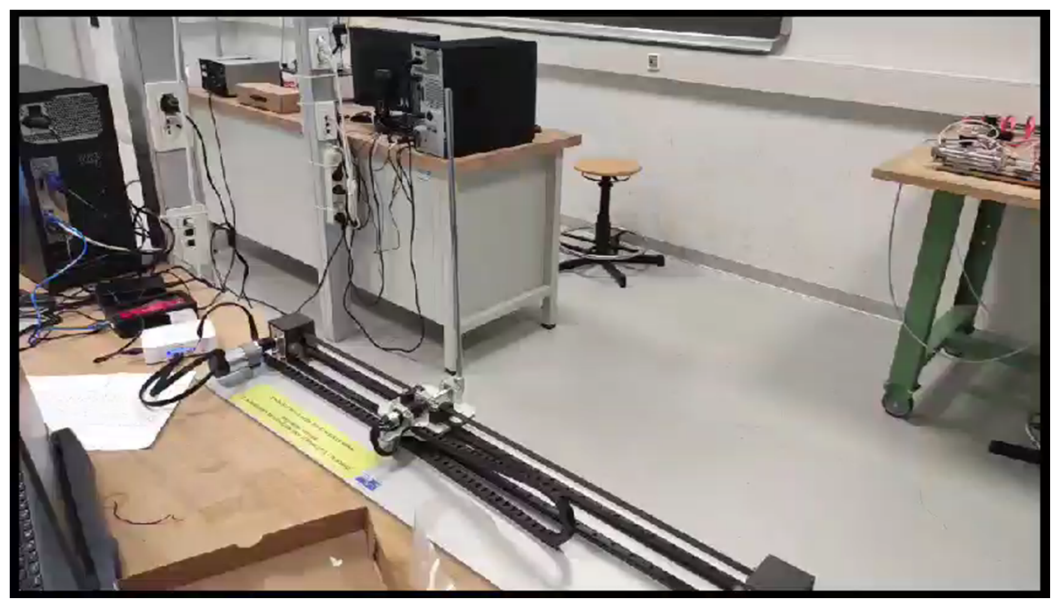

Roadmap of the activity

- ✓ Modeling of the system:
  - ✓ Full nonlinear and linearized model
  - ✓ Mechanical and electrical parameters identification
- ✓ Pendulum stabilization
  - ✓ Downward and upward stabilization
  - ✓ Control logics: PID, root-locus, pole placement, LQR, LQG,…
- ✓ Swing-up
  - ✓ Energy control, positive feedback, heuristic,…
- ✓ Critical analysis of the robustness of the control logics
- ✓ Double pendulum
- ✓ …

Available experiences:

1. Automation of an elevator plant
2. Control of electric drives and pneumatic actuators in an automated plant
3. Automation of a storage warehouse
4. Control of a PMDC – PMDC system
5. Control of a PMSM – PMDC system
6. Control of linear vibrations
7. Industrial plant
8. Control of a linear pendulum
9. **Control of a rotational pendulum I**
10. Control of a rotational pendulum II
11. Control of a reaction pendulum
12. 2D ball balancing
13. Maglev
14. Magnetic bearing (Maglev 2)
15. Quanser Aero
16. Quadcopter

Control of a rotational pendulum/flexible link

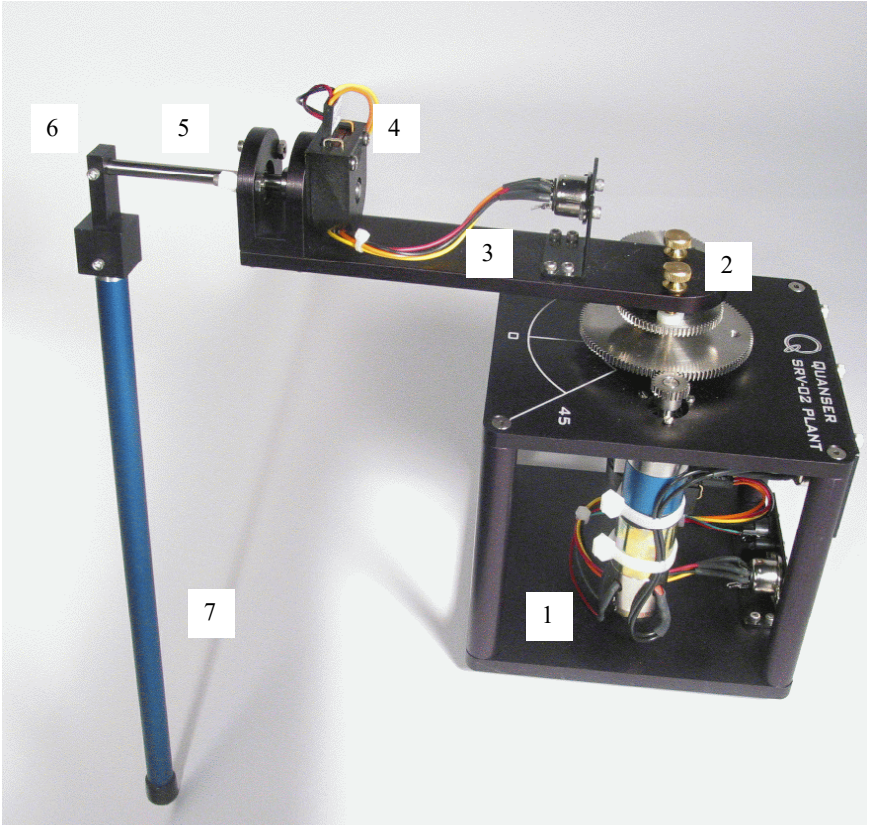

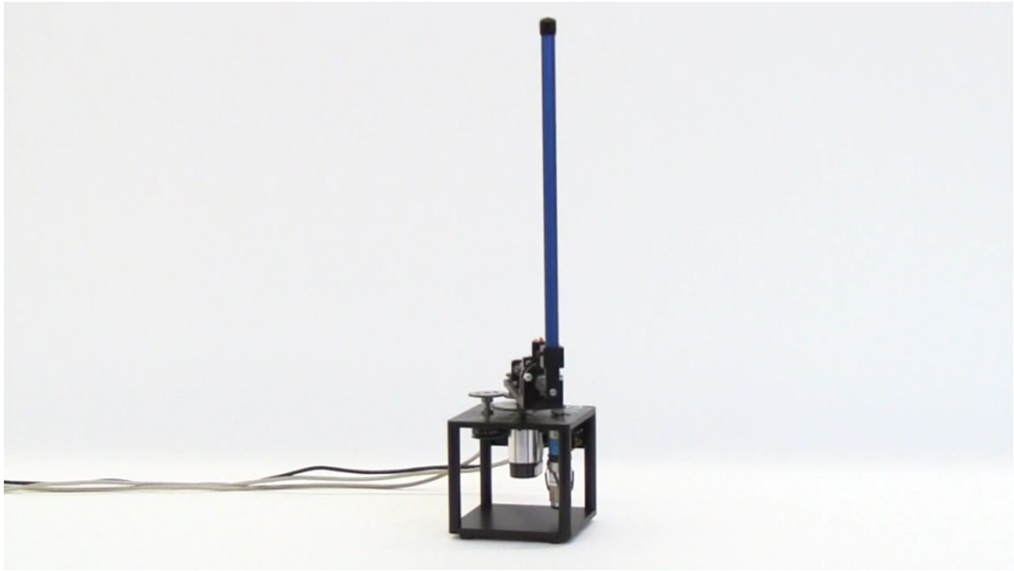

Control of a rotational pendulum/flexible link

The system consists of a basic unit that can be equipped with different modula, simulating joint flexibility (ROTFLEX), link flexibility (FLEXGAGE) and a rotary pendulum (ROTPEN).

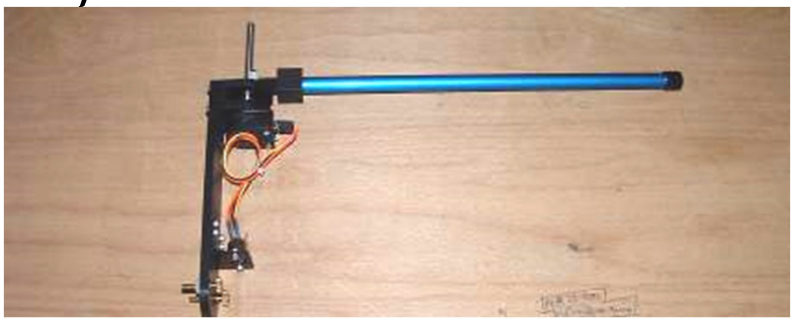

Control of a rotational pendulum/flexible link

The system consists of a DC motor in a solid aluminum frame. The motor is equipped with a gearbox. The gearbox output drives external gears. The basic unit is equipped with an encoder to measure the output/load angular position.

Control of a rotational pendulum/flexible link

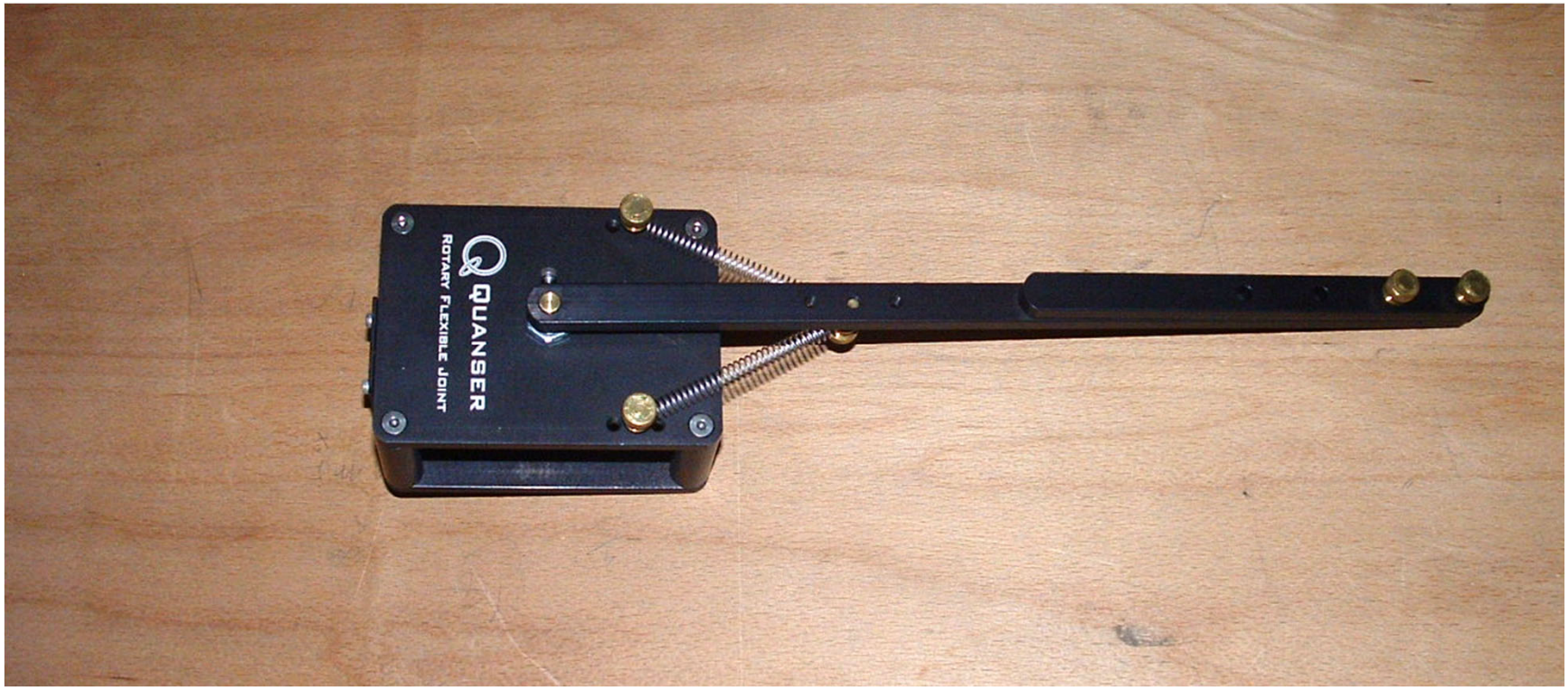

Control of a rotational pendulum/flexible link

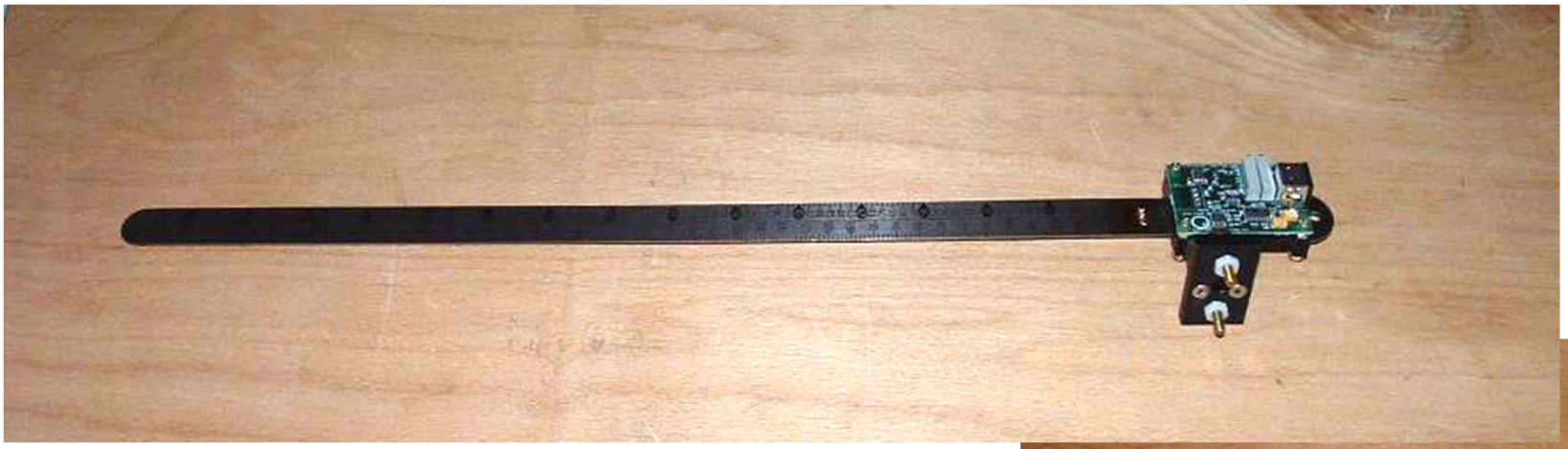

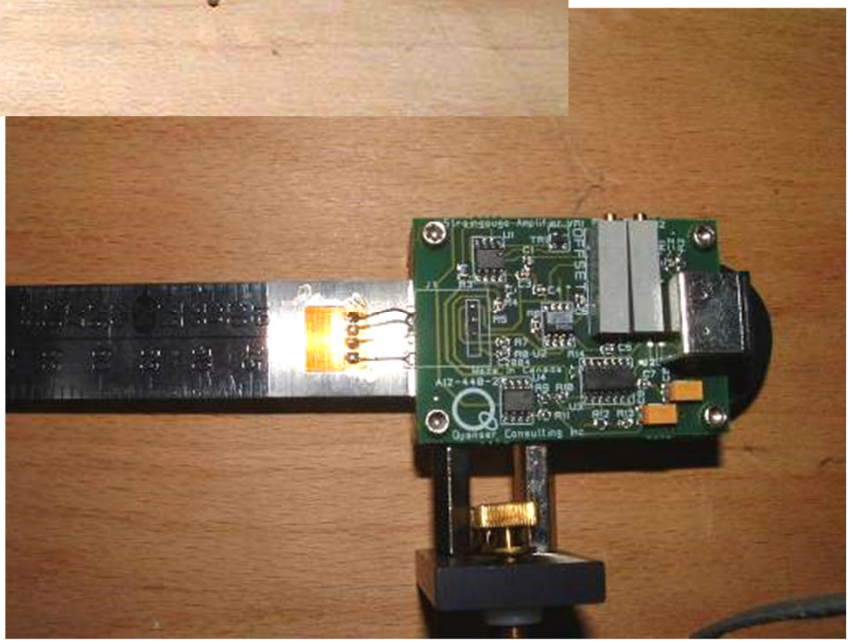

Control of a rotational pendulum/flexible link

PoliArd board

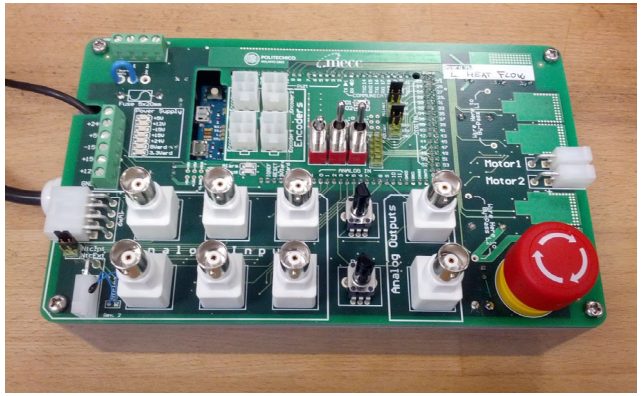

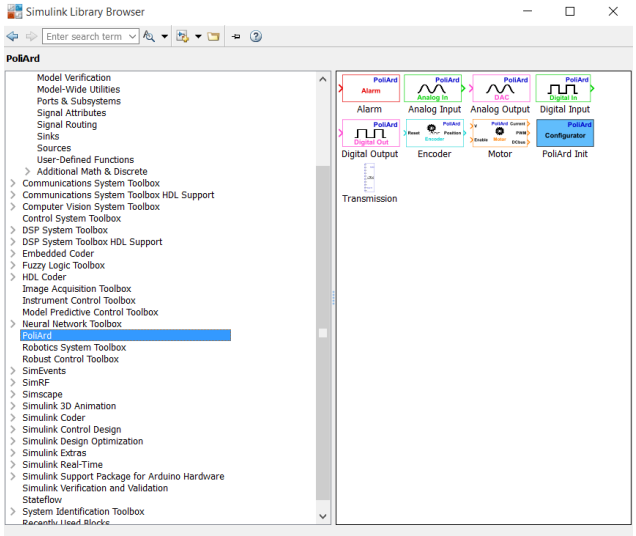

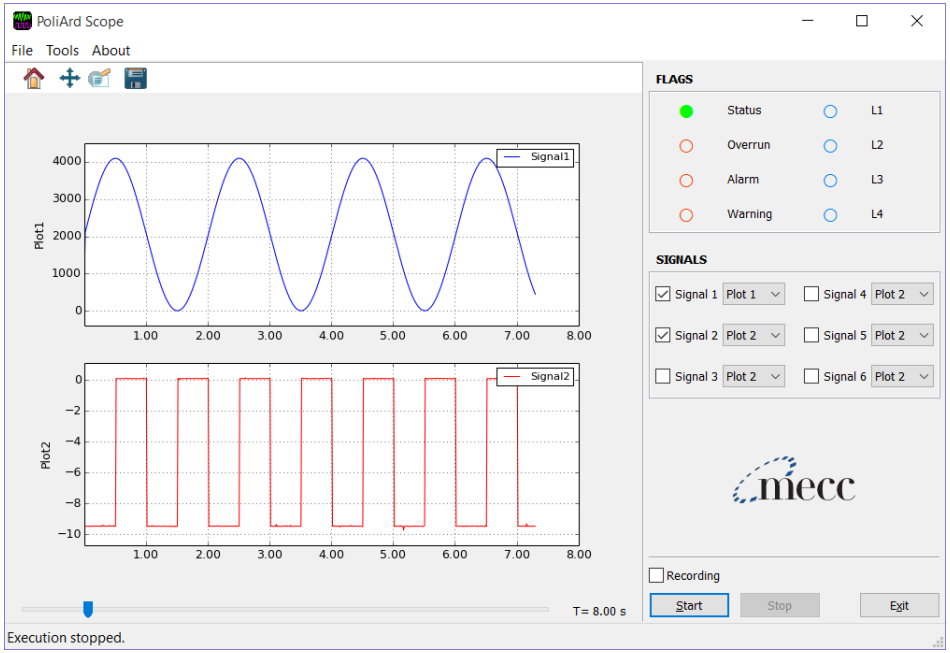

Control of a rotational pendulum/flexible link

Consider different system configurations (with increasing difficulty levels). Steps for each subsystem:

1. Development of models for simulation (time domain) and for control synthesis and tuning (Laplace domain)
2. Identification of unknown parameters of the model/s
3. Numerical implementation and verification of different control logics (classical control and modern control, if applicable)
4. Implementation of the control on the real system and comparison between numerical and experimental results (with possible optimisation of the control parameters for the real system)
5. Comparison of the performances of the different control logics/calibrations (robustness)

Available experiences:

1. Automation of an elevator plant
2. Control of electric drives and pneumatic actuators in an automated plant
3. Automation of a storage warehouse
4. Control of a PMDC – PMDC system
5. Control of a PMSM – PMDC system
6. Control of linear vibrations
7. Industrial plant
8. Control of a linear pendulum
9. Control of a rotational pendulum I
10. **Control of a rotational pendulum II**
11. Control of a reaction pendulum
12. 2D ball balancing
13. Maglev
14. Magnetic bearing (Maglev 2)
15. Quanser Aero
16. Quadcopter

Rotational pendulum

The **rotational pendulum** is composed of

Motorized rotational guide (1)

- *Encoder to measure its rotation*

Rotational pendulum (2)

- *Encoder to measure its rotation*

Rotational pendulum

CONTROL GOAL: actuate the motor to

- control the pendulum in its two equilibrium points
- swing up the pendulum

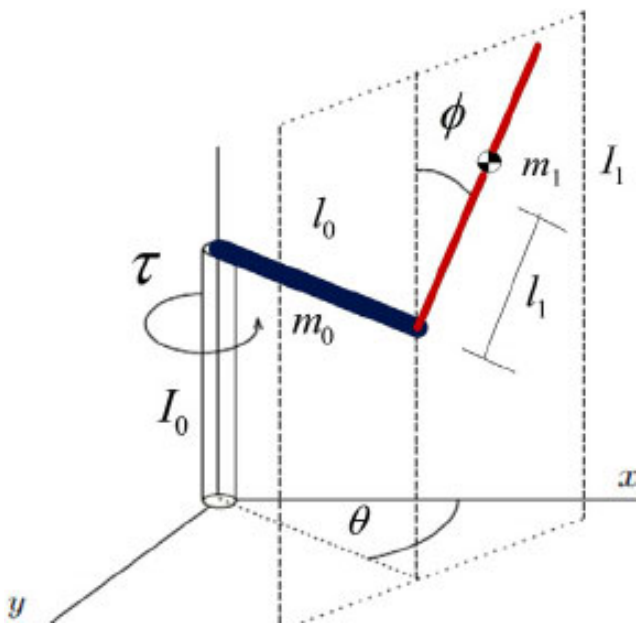

Roadmap of the activity

- ✓ Modeling of the system:
  - ✓ Full nonlinear and linearized model
  - ✓ Mechanical and electrical parameters identification
- ✓ Pendulum stabilization
  - ✓ Downward and upward stabilization
  - ✓ Control logics: PID, root-locus, pole placement, LQR, LQG,…
- ✓ Swing-up
  - ✓ Energy control, positive feedback, heuristic,…
- ✓ Critical analysis of the robustness of the control logics
- ✓ …

Available experiences:

1. Automation of an elevator plant
2. Control of electric drives and pneumatic actuators in an automated plant
3. Automation of a storage warehouse
4. Control of a PMDC – PMDC system
5. Control of a PMSM – PMDC system
6. Control of linear vibrations
7. Industrial plant
8. Control of a linear pendulum
9. Control of a rotational pendulum I
10. Control of a rotational pendulum II
11. **Control of a reaction pendulum**
12. 2D ball balancing
13. Maglev
14. Magnetic bearing (Maglev 2)
15. Quanser Aero
16. Quadcopter

Reaction pendulum

The **reaction pendulum** is composed of

Reaction wheel (1)

- *Encoder to measure its rotation*
- *DC motor to control it*

Rotational pendulum (2)

- *Encoder to measure its rotation*

- The device is equipped with PWM controlled DC motor which drives a flywheel.
- Any change in rotational speed of reaction wheel influences rotational speed of the pendulum rod accordingly to conservation of angular momentum.
- The coupling torque generated by the angular acceleration of the disk can be used to actively control the system.

Reaction pendulum

CONTROL GOAL: actuate the motor to

- control the pendulum in its two equilibrium points
- swing up the pendulum

- The center of mass of the rod can be adjusted with counterweight thus affecting dynamics of the RWP.

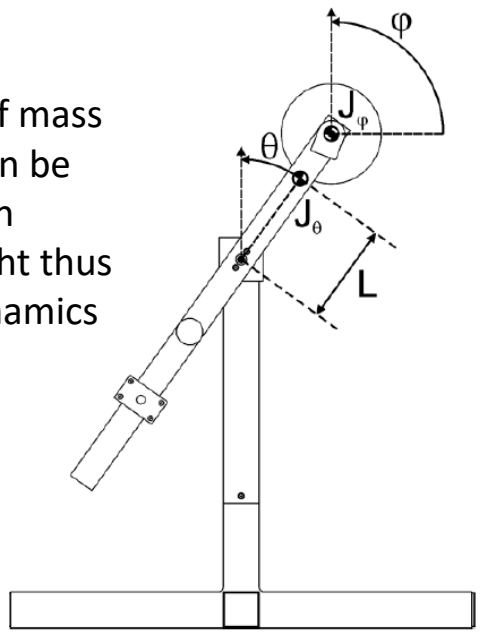

Roadmap of the activity

- ✓ Modeling of the system:
  - ✓ Full nonlinear and linearized model
  - ✓ Mechanical and electrical parameters identification
- ✓ Pendulum stabilization
  - ✓ Downward and upward stabilization
  - ✓ Control logics: PID, root-locus, pole placement, LQR, LQG,…
- ✓ Swing-up
  - ✓ Energy control, positive feedback, heuristic,…
- ✓ …

Available experiences:

1. Automation of an elevator plant
2. Control of electric drives and pneumatic actuators in an automated plant
3. Automation of a storage warehouse
4. Control of a PMDC – PMDC system
5. Control of a PMSM – PMDC system
6. Control of linear vibrations
7. Industrial plant
8. Control of a linear pendulum
9. Control of a rotational pendulum I
10. Control of a rotational pendulum II
11. Control of a reaction pendulum
12. **2D ball balancing**
13. Maglev
14. Magnetic bearing (Maglev 2)
15. Quanser Aero
16. Quadcopter

2D ball balancing

The system is composed by an unstable ball on a table

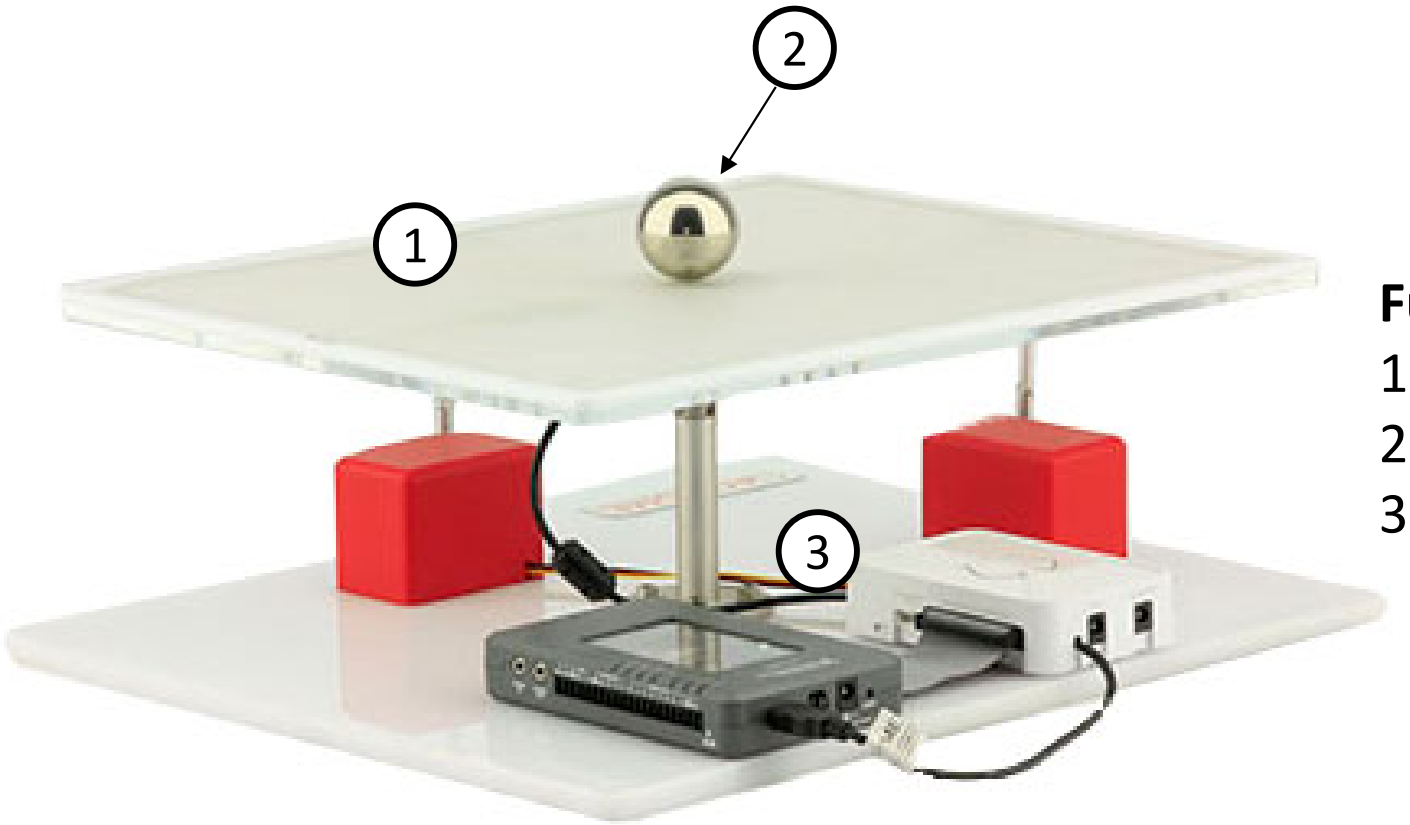

Fundamental parts:

1. Touch-sensitive table
2. Ball
3. Joint + 2 servos

PoliArd board

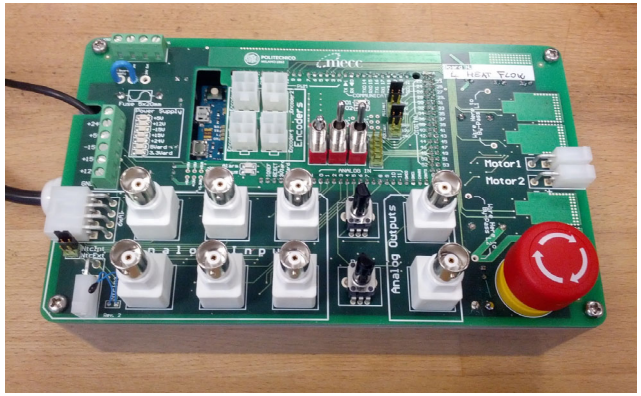

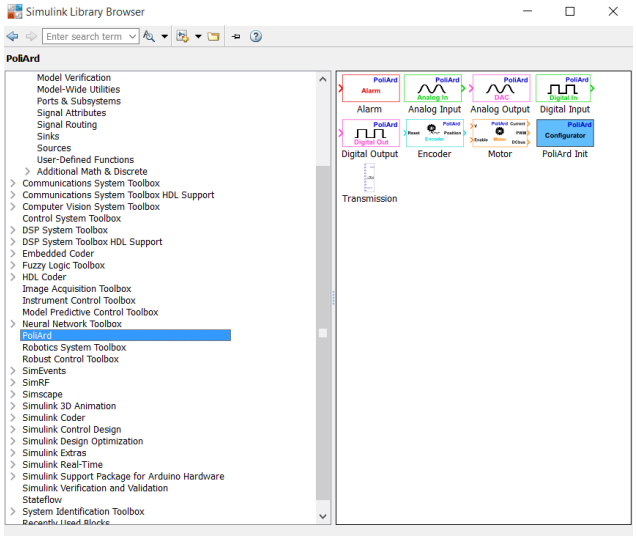

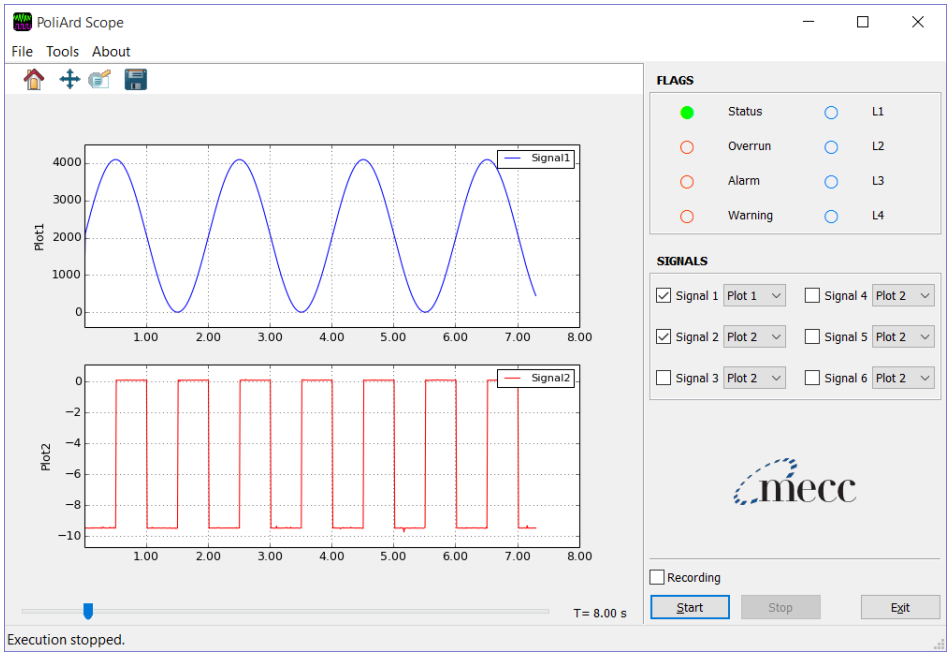

2D ball balancing – suggested steps

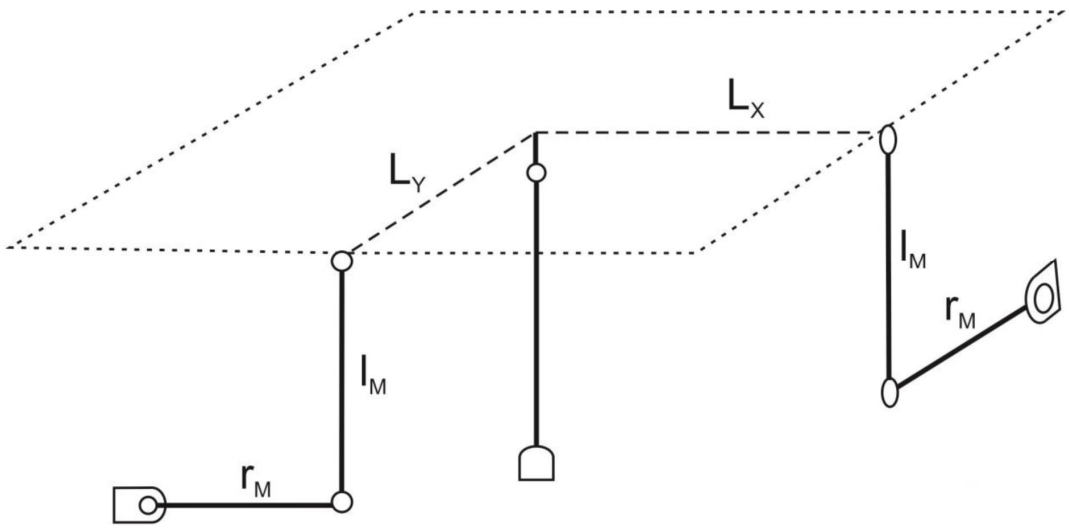

1. Modelling, identification and simulation of the system
2. Stabilisation of the ball
3. Placement of the ball
4. 1D trajectory tracking
5. 2D trajectory tracking

Available experiences:

1. Automation of an elevator plant
2. Control of electric drives and pneumatic actuators in an automated plant
3. Automation of a storage warehouse
4. Control of a PMDC – PMDC system
5. Control of a PMSM – PMDC system
6. Control of linear vibrations
7. Industrial plant
8. Control of a linear pendulum
9. Control of a rotational pendulum I
10. Control of a rotational pendulum II
11. Control of a reaction pendulum
12. 2D ball balancing
13. **Maglev**
14. Magnetic bearing (Maglev 2)
15. Quanser Aero
16. Quadcopter

Maglev

The **Maglev** is an electromagnetic levitation system.

The solenoid2 **(1)**, thanks to the current flow, generates a magnetic field inside the internal chamber

The ferromagnetic ball **(2)** is attracted by the solenoid: (as function of ball vertical position and current intensity)

Equilibrium is obtained when attractive force equals gravity force

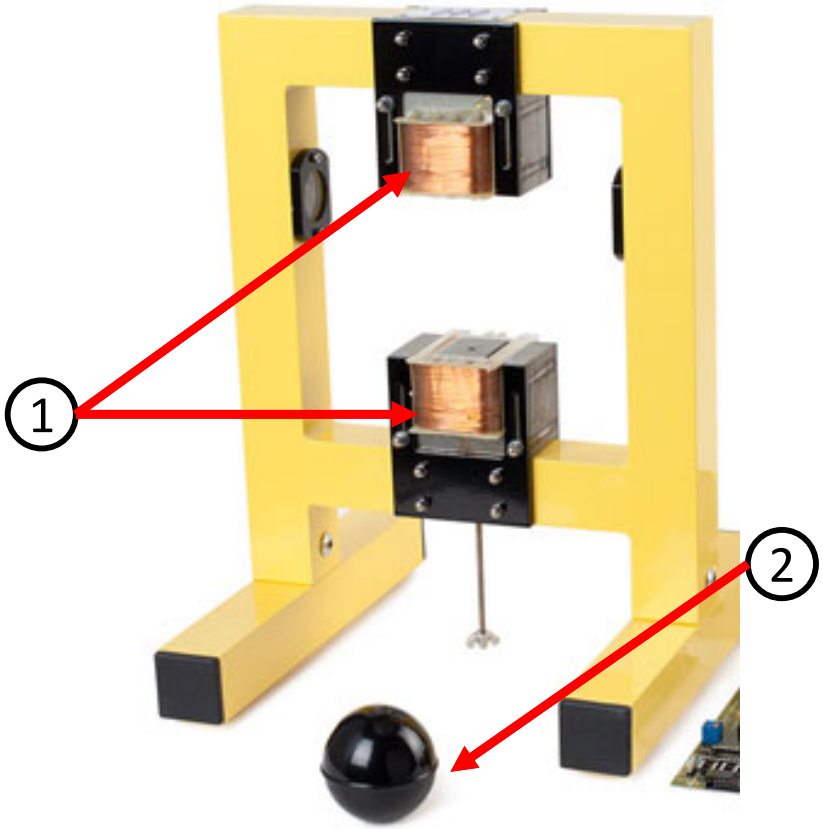

Maglev

Maglev plant is composed by:

Current sensor

Voltage input

Position sensor

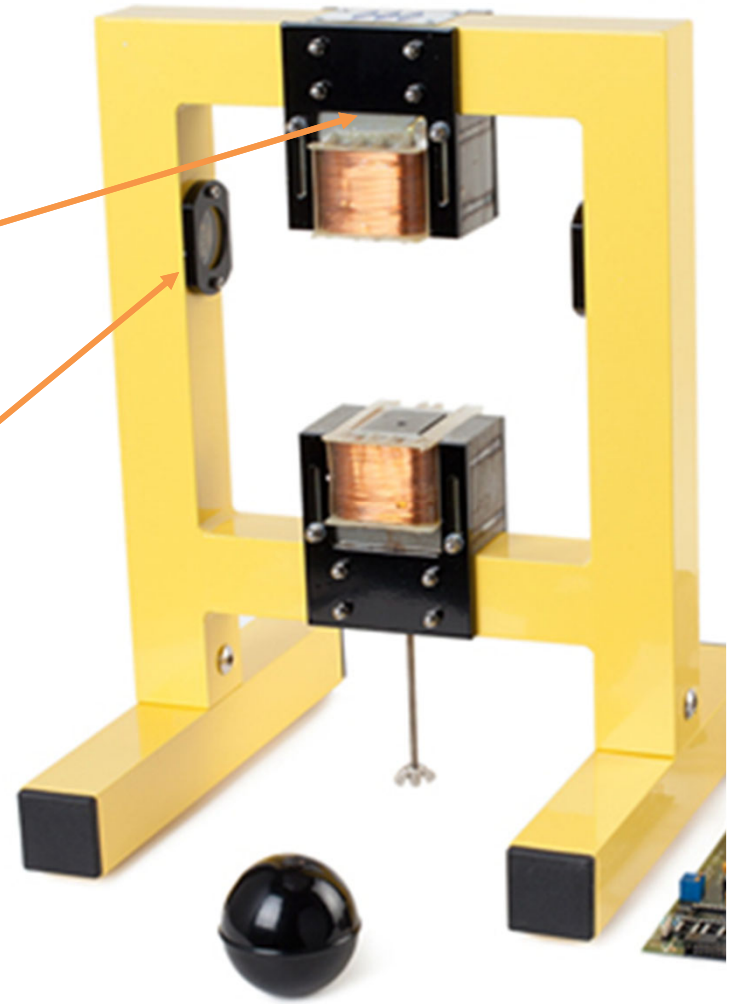

Maglev

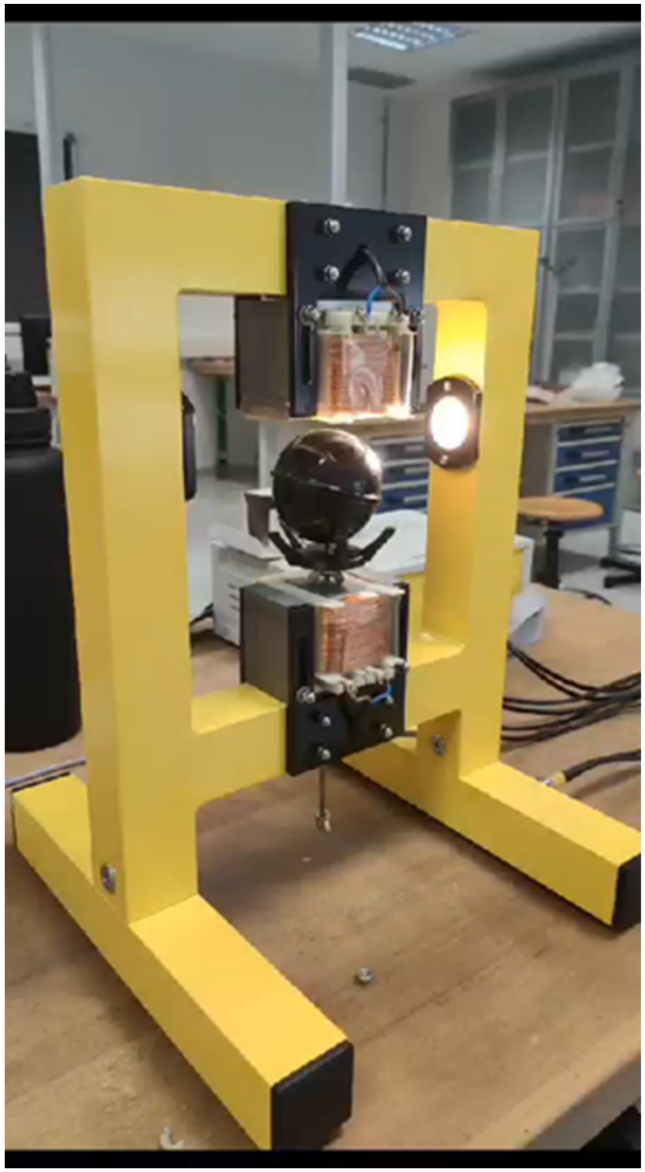

electromagnetic system

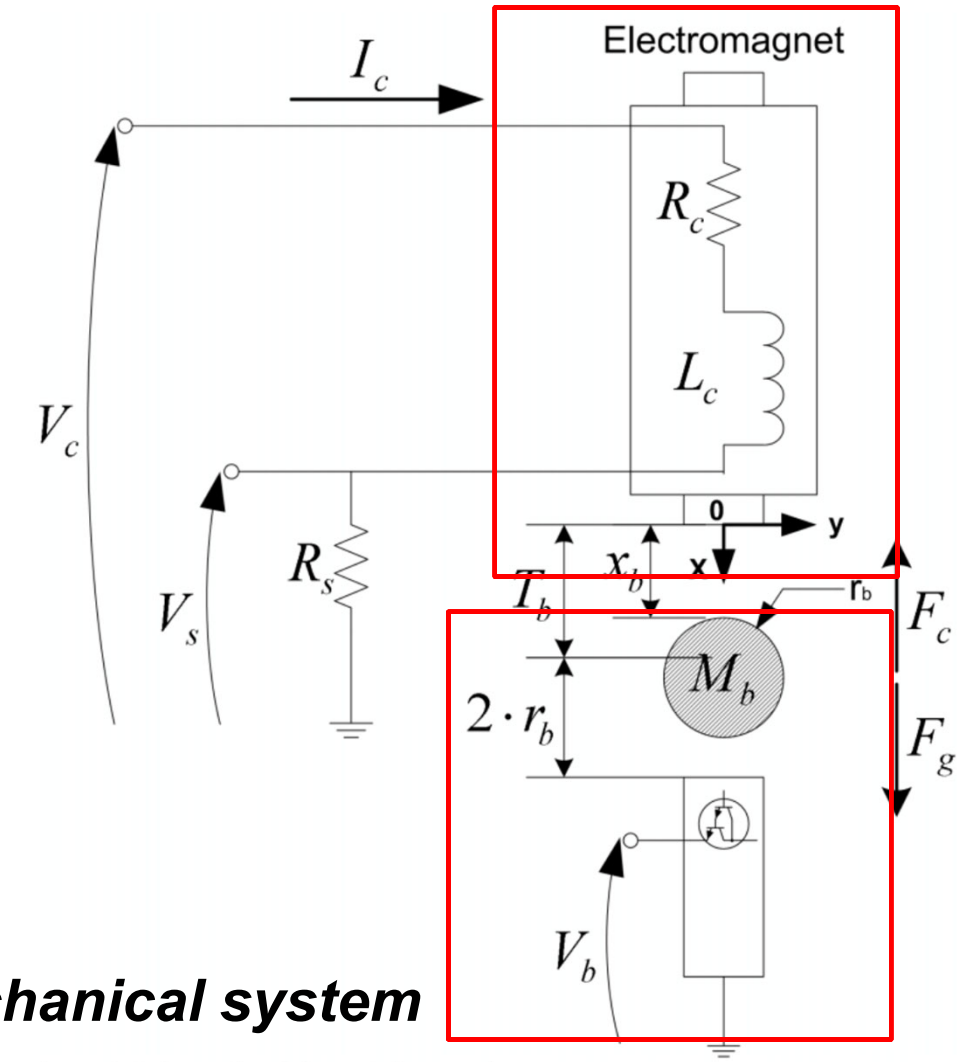

Mechanical system

Maglev – system model

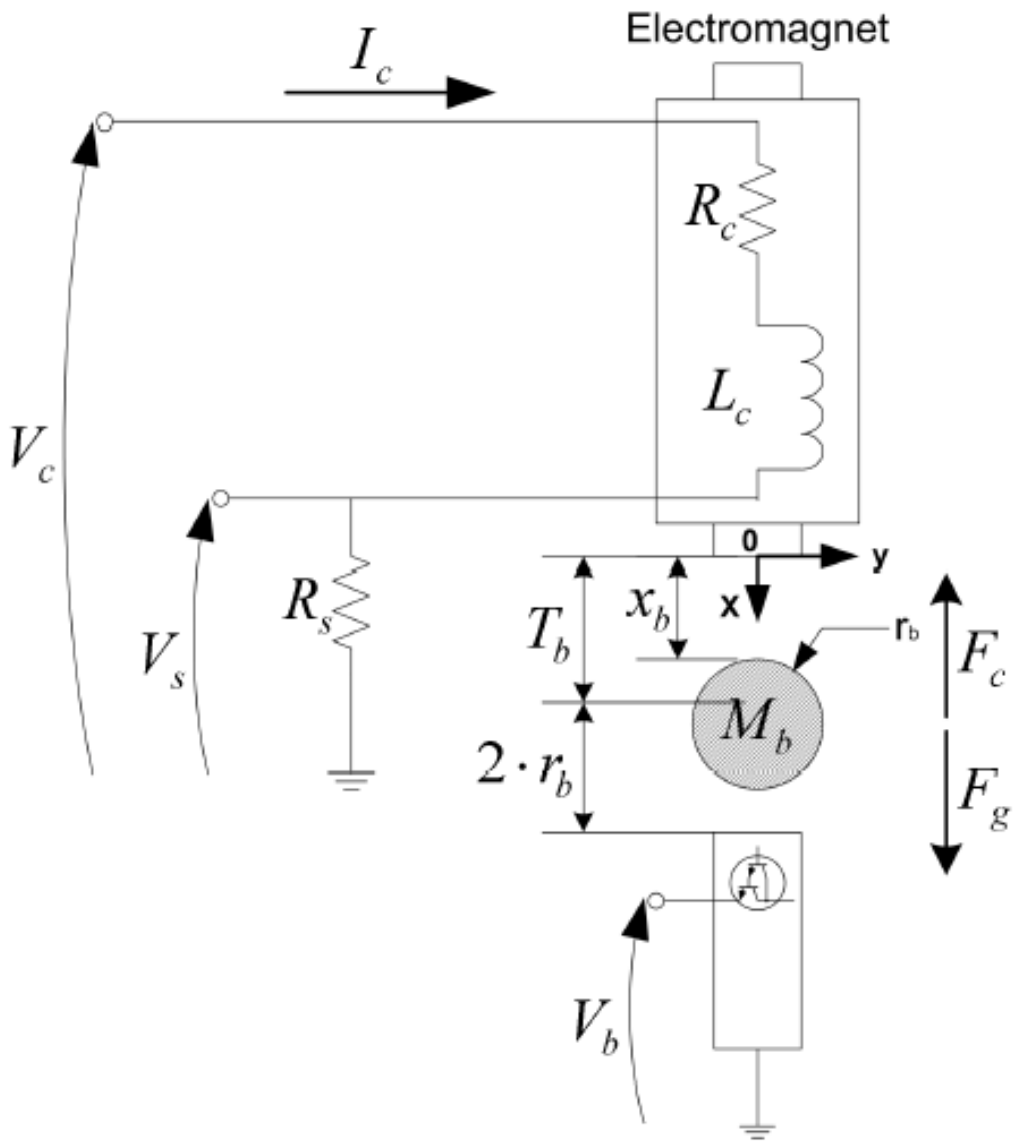

- Fc magnetic attraction force
- Fg gravitational force
- Vc output voltage
- Ic coil current
- Rc coil resistance
- Lc coil inductance
- xb ball distance from the core

Maglev – system model

$$G_c(s) = \frac{I_c(s)}{V_c(s)}$$

The first step consists in the identification of the transfer function Between the applied voltage and the output current

This tranfer function can be obtained from the KLV applied to the electrical system

$$V_c(t) = (R_c + R_s)\, I_c(t) + L_c \left(\frac{d}{dt} I_c(t) \right)$$

Considering the mechanical part, the forces acting on the ball has to be considered

Gravitational force $F_g = M_b\, g$

Magnetic force $F_c = -\frac{1}{2} \frac{K_m I_c^2}{x_b^2}$

Maglev – system model

$$F_c + F_g = -\frac{1}{2}\frac{K_m I_c^2}{x_b^2} + M_b g$$

Static equilibrium

Considering the dynamic equilibrium, by adding the $M_b \ddot{x}_b$ term corresponding to the inertial action, and simplifing the ball mass M_b , the following non-linear equation can be obtained:

$$\frac{\partial^2}{\partial t^2} x_b = -\frac{1}{2}\frac{K_m I_c^2}{M_b x_b^2} + g$$

This equation should be linearised for evaluating the transfer function between the current Ic(s) and the ball position Xb(s).

Maglev

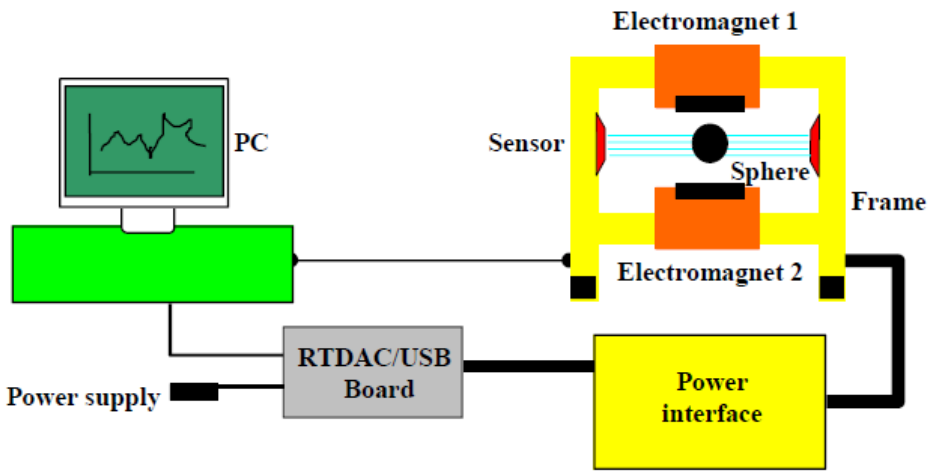

Simulink based

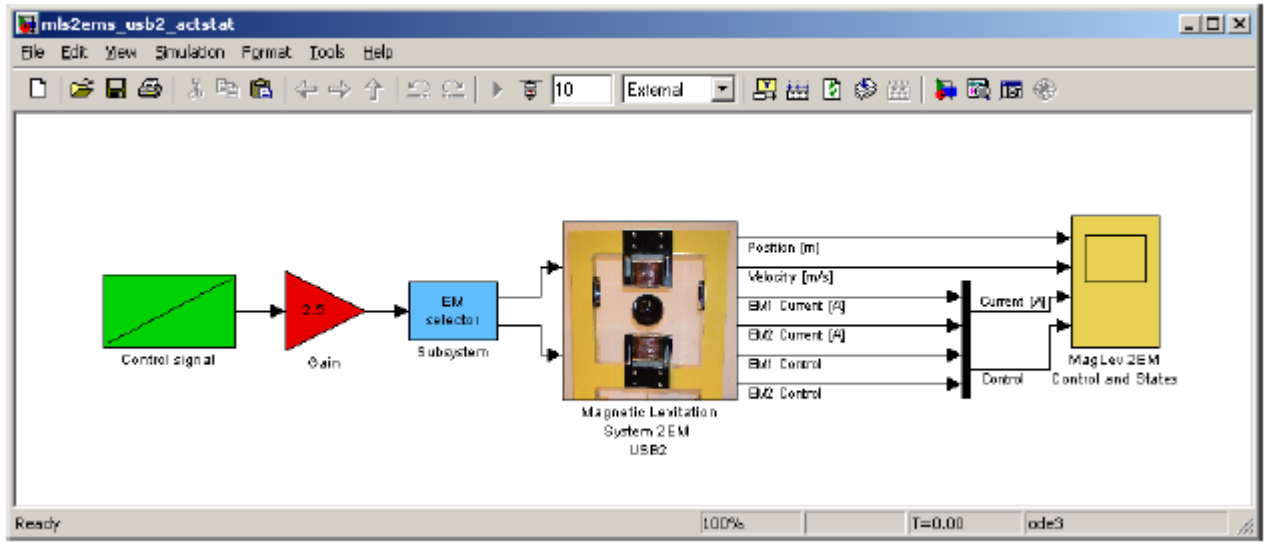

Roadmap of the activity

- ✓ modeling of the system:
  - ✓ mechanical and electromagnetic parameters estimation
  - ✓ sensor noise analysis
- ✓ Stabilization of the system:
  - ✓ Linear control logics (PID, pole placement, …)
  - ✓ Non-linear control logics (gain scheduling, optimal control, …)
  - ✓ Robust control logics
- ✓ Trajectory following
- ✓ Noise reduction
- ✓ …

Available experiences:

1. Automation of an elevator plant
2. Control of electric drives and pneumatic actuators in an automated plant
3. Automation of a storage warehouse
4. Control of a PMDC – PMDC system
5. Control of a PMSM – PMDC system
6. Control of linear vibrations
7. Industrial plant
8. Control of a linear pendulum
9. Control of a rotational pendulum I
10. Control of a rotational pendulum II
11. Control of a reaction pendulum
12. 2D ball balancing
13. Maglev
14. **Magnetic bearing (Maglev 2)**
15. Quanser Aero
16. Quadcopter

Magnetic bearing (Maglev 2)

Ferromagnetic core with coils

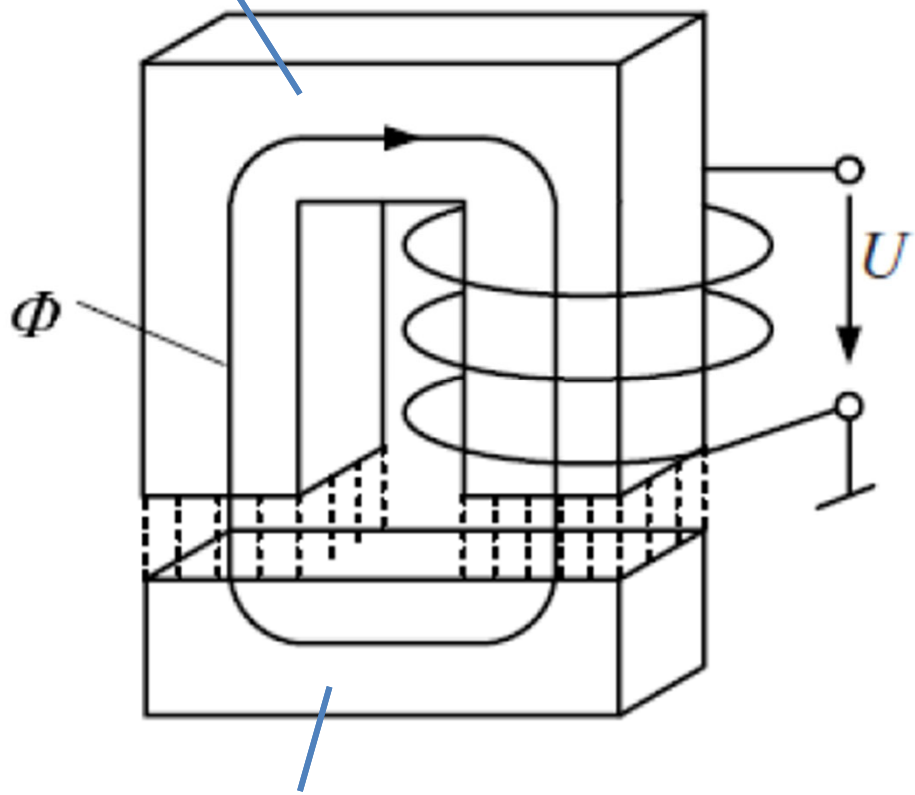

Ferromagnetic specimen

Input:

- Voltage

Output

- Current
- Position

Model

- Electromechanical model
- (attractive force, gravity, losses, inductance resistance…)

Magnetic bearing

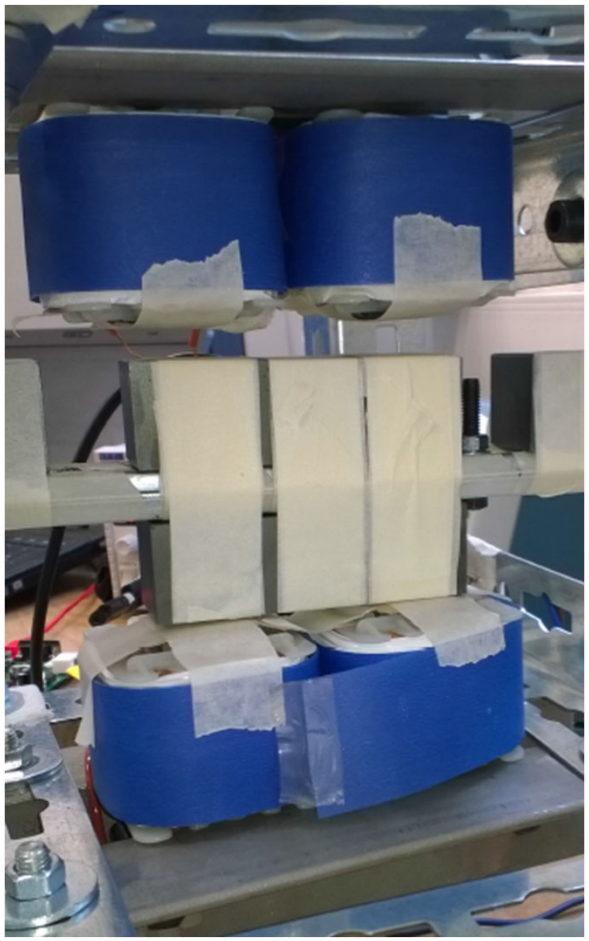

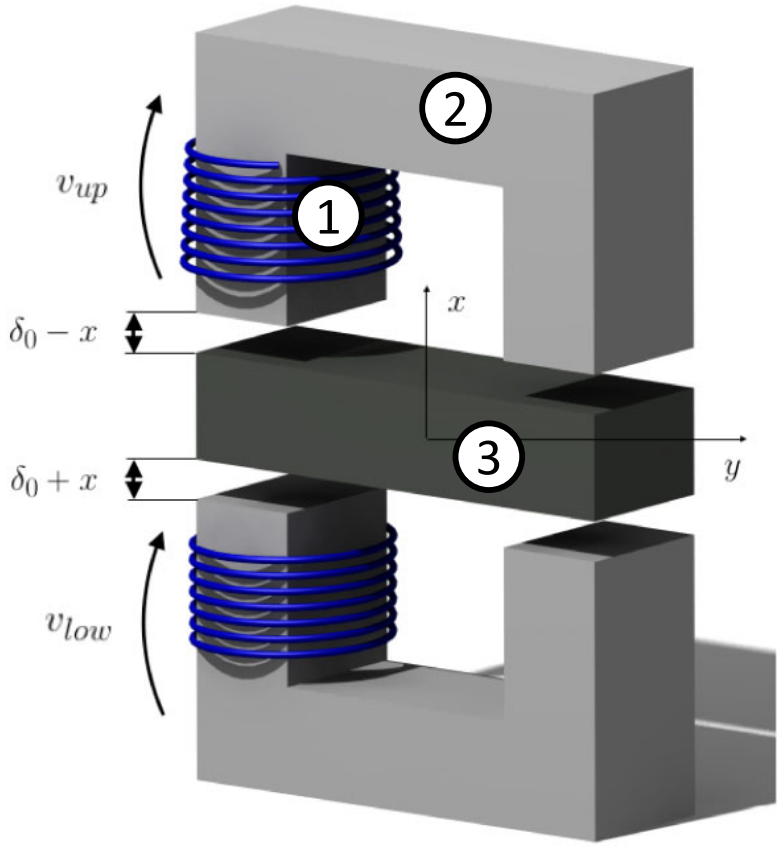

Magnetic Bearing is the 1 d.o.f. element of a radial Active magnetic bearing (AMB)

Fundamental parts:

1. Electric coils
2. Magnetic cores
3. Magnetic specimen

Magnetic bearing

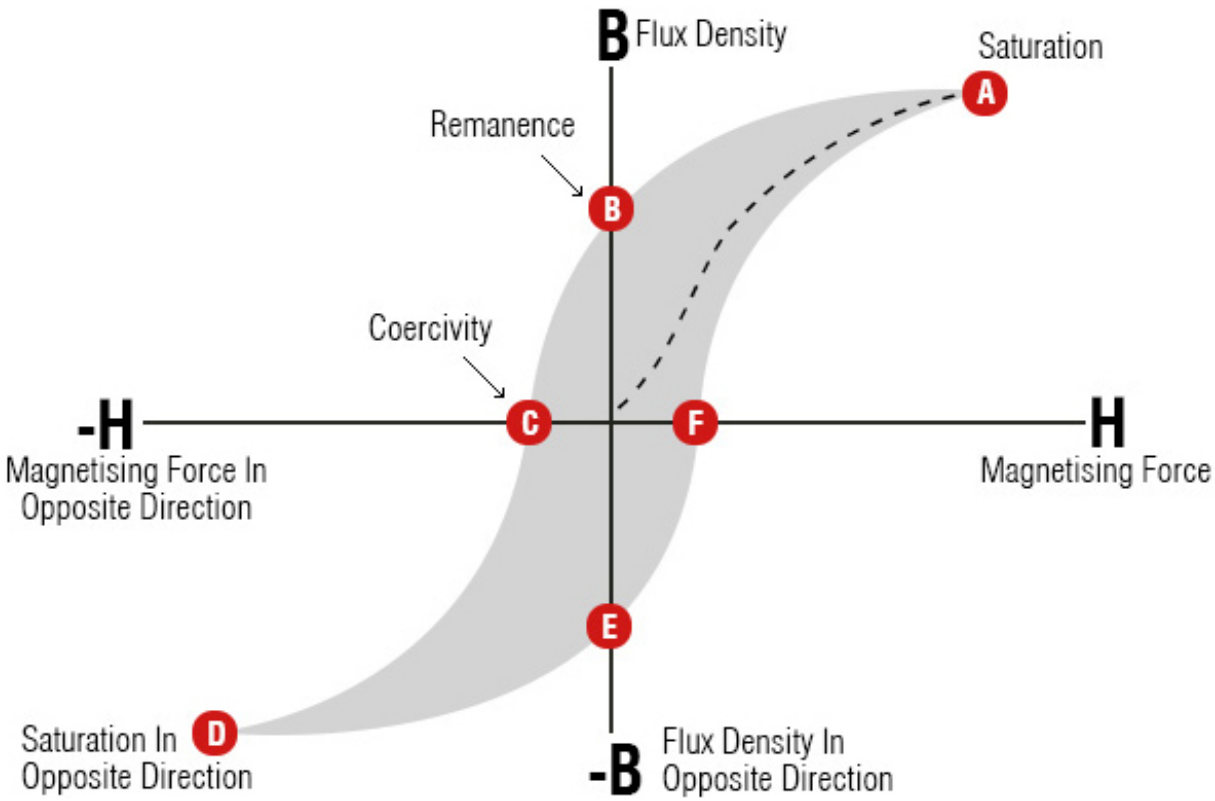

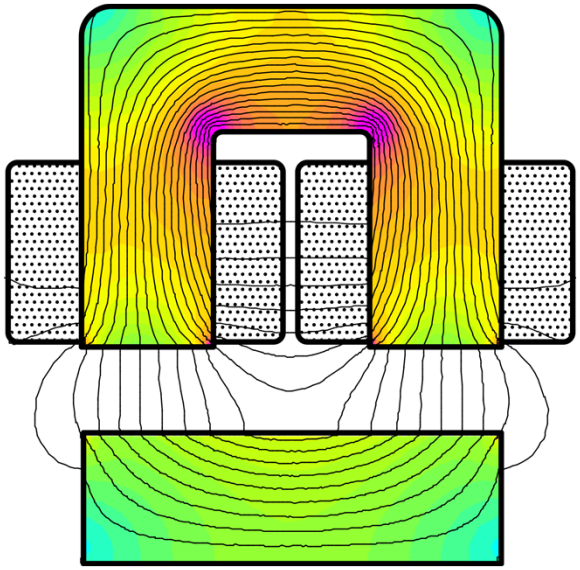

System has some criticalities:

1. Hysteresis of magnetic core
2. Consequent nonlinear induction
3. Heating of the magnet

Magnetic bearing (Maglev 2)

PoliArd board

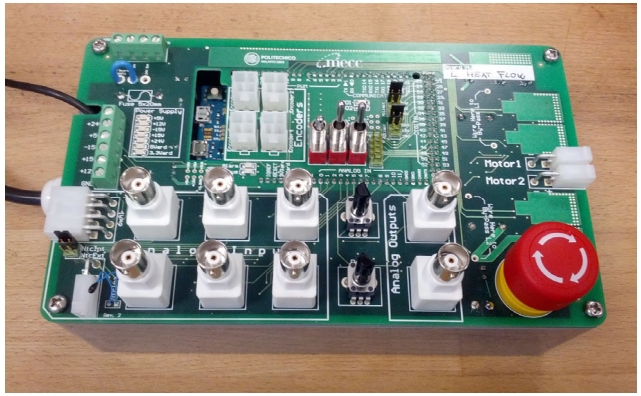

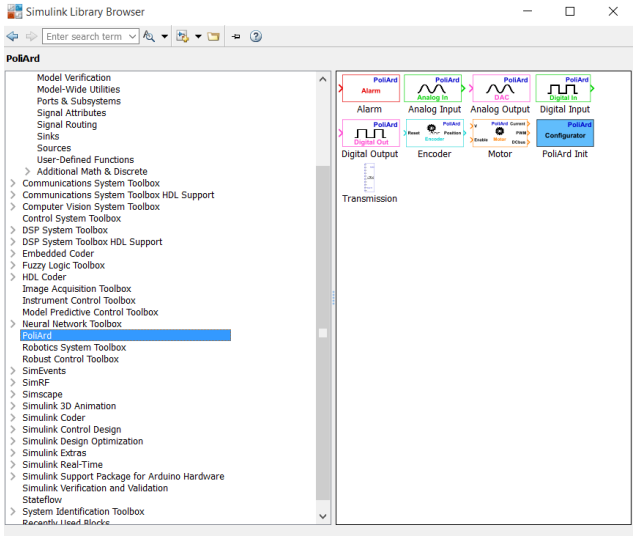

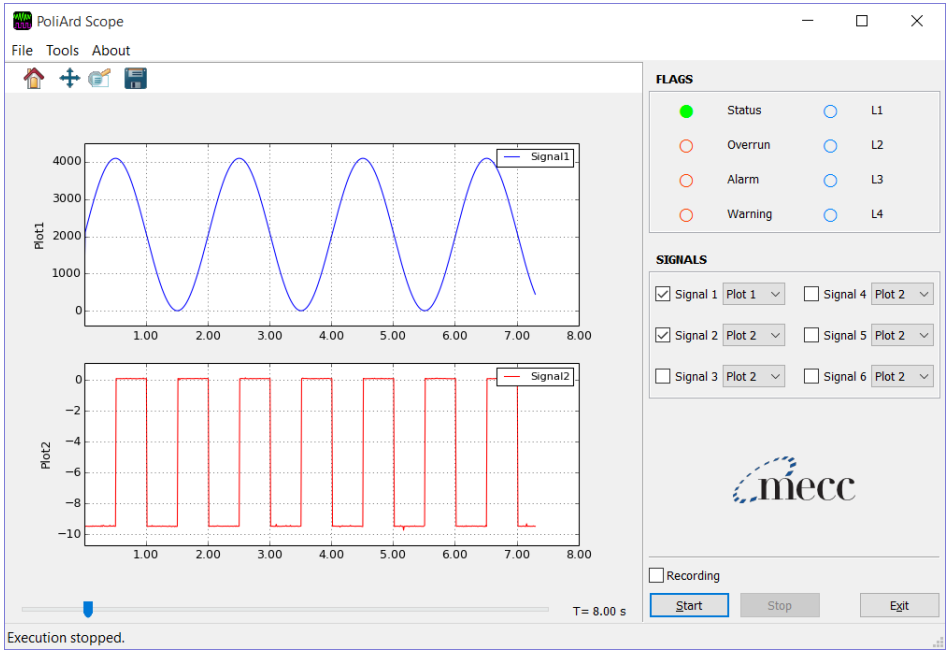

Roadmap of the activity

- ✓ modeling of the system:
  - ✓ Electromechanical model of the system
  - ✓ Nonlinear inductance estimation
  - ✓ Mechanical parameters estimation
- ✓ Control of the system:
  - ✓ Linear control logics (PID, pole placement, …)
  - ✓ Non-linear control logics (optimal control, …)
  - ✓ Observers implementation
- ✓ Control logics goals:
  - ✓ Stabilize in different equilibrium position
  - ✓ Trajectories imposition
- ✓ …

Available experiences:

1. Automation of an elevator plant
2. Control of electric drives and pneumatic actuators in an automated plant
3. Automation of a storage warehouse
4. Control of a PMDC – PMDC system
5. Control of a PMSM – PMDC system
6. Control of linear vibrations
7. Industrial plant
8. Control of a linear pendulum
9. Control of a rotational pendulum I
10. Control of a rotational pendulum II
11. Control of a reaction pendulum
12. 2D ball balancing
13. Maglev
14. Magnetic bearing (Maglev 2)
15. **Quanser Aero**
16. Quadcopter

Quanser Aero

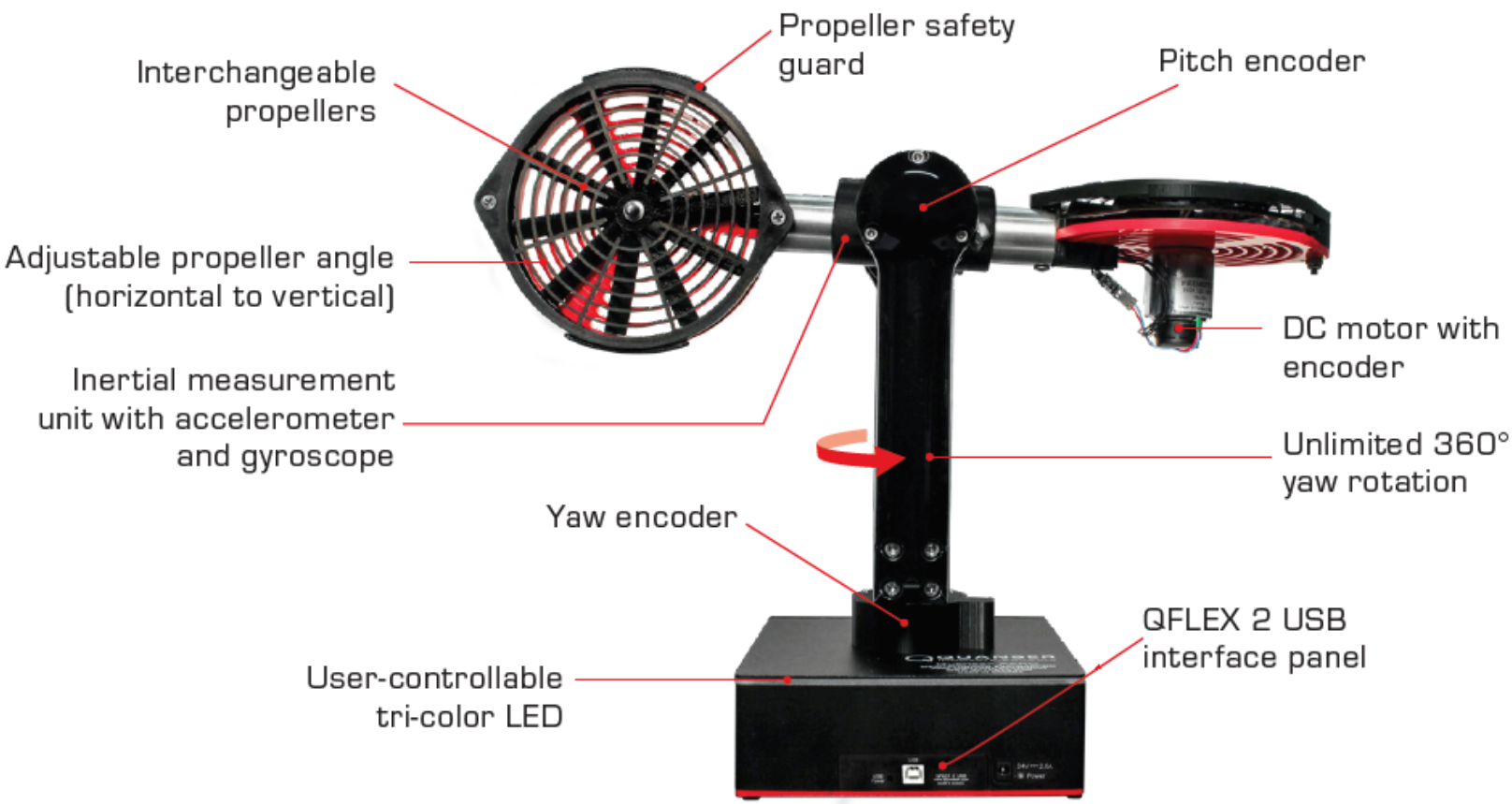

Different propellers with different efficiency

Quanser Aero

Dual-rotor helicopter configuration

- One horizontal rotor and one vertical rotor
- Both pitch and yaw are free

The front rotor that is horizontal to the ground predominantly affects the motion about the pitch axis while the back or tail rotor mainly affects the motion about the yaw axis (about the shaft).
Coupling exist and is experienced when using low efficiency rotors.

Quanser Aero

Half quadrotor system configuration

- Both rotors are horizontal
- Yaw is free and pitch is locked

By changing the direction and speed of the rotors, users can change the yaw angle.

QUARC Toolbox

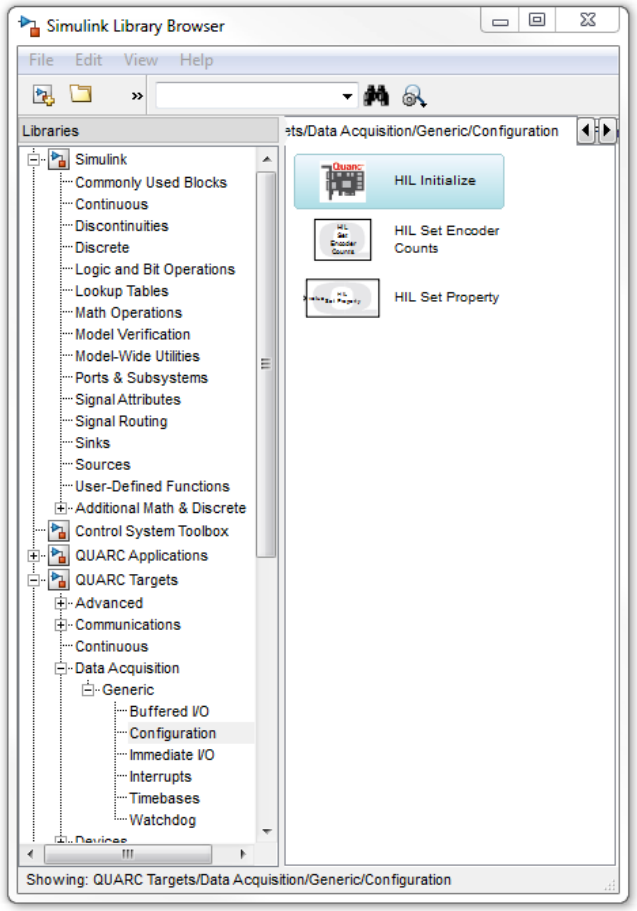

Quanser Aero – suggested steps

Consider different system configurations. Steps for each subsystem:

1. Development of models for simulation (time domain) and for control synthesis and tuning (Laplace domain)
2. Identification of unknown parameters of the model/s
3. Numerical implementation and verification of different control logics (classical control and modern control, if applicable)
4. Implementation of the control on the real system and comparison between numerical and experimental results (with possible optimisation of the control parameters for the real system)
5. Comparison of the performances of the different control logics/calibrations (robustness)

Available experiences:

1. Automation of an elevator plant
2. Control of electric drives and pneumatic actuators in an automated plant
3. Automation of a storage warehouse
4. Control of a PMDC – PMDC system
5. Control of a PMSM – PMDC system
6. Control of linear vibrations
7. Industrial plant
8. Control of a linear pendulum
9. Control of a rotational pendulum I
10. Control of a rotational pendulum II
11. Control of a reaction pendulum
12. 2D ball balancing
13. Maglev
14. Magnetic bearing (Maglev 2)
15. Quanser Aero
16. **Quadcopter**

Quadcopter

The **Quadcopter** is mounted on a **hub**

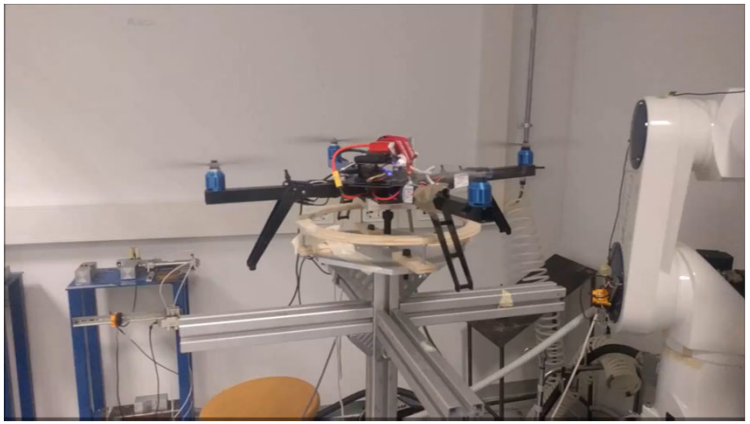

Rotational dof to limit

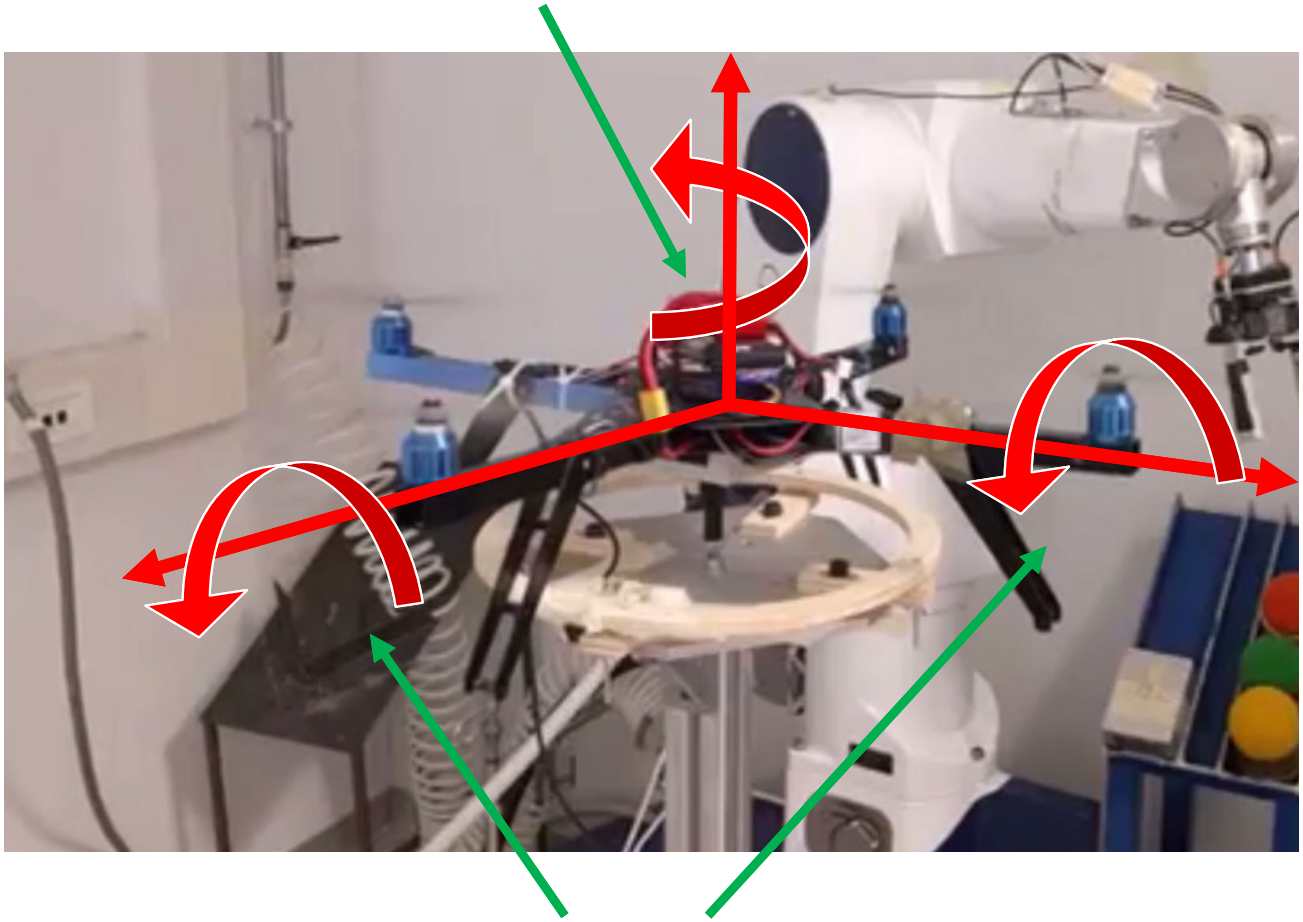

Rotational dofs to control

Quadcopter

Cube Orange MCU

PC

carbon fiber frame

Quadcopter

Simulink block-sets pre-installed and documentation provided for:

IMU (Inertial Measurement Unit); on board tools (RC, GPS…) and how to control the propellers.

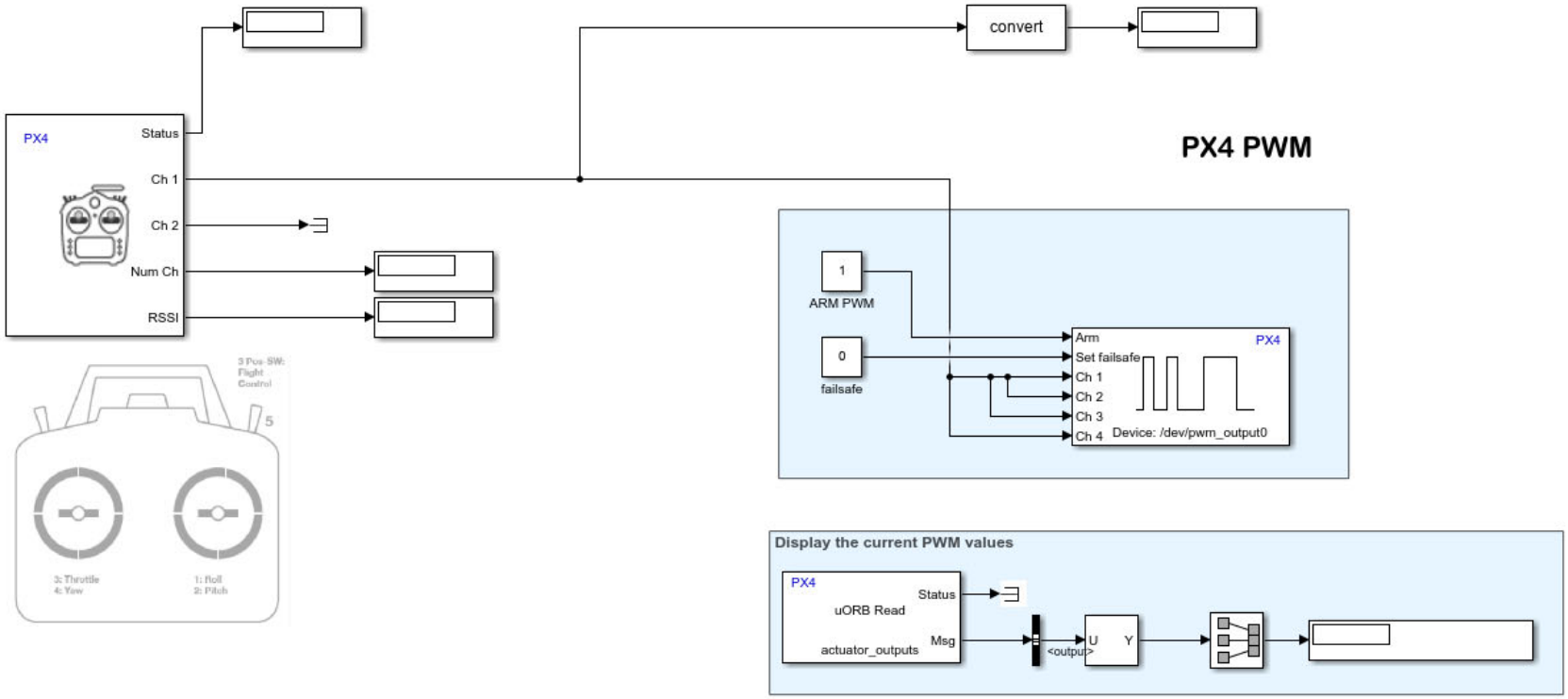

Roadmap of the activity

- ✓ modeling of the system:
  - ✓ mechanical and propellers parameters estimation
  - ✓ sensor noise analysis
- ✓ Stabilization of the system (1 dof):
  - ✓ Linear control logics (PID, pole placement, …)
  - ✓ Non-linear control logics (optimal control, …)
- ✓ Stabilization of the system (2dof):
  - ✓ Linear control logics (PID, pole placement, …)
  - ✓ Non-linear control logics (optimal control, …)
- ✓ …

Available experiences:

1. Automation of an elevator plant
2. Control of electric drives and pneumatic actuators in an automated plant
3. Automation of a storage warehouse
4. Control of a PMDC – PMDC system
5. Control of a PMSM – PMDC system
6. Control of linear vibrations
7. Industrial plant
8. Control of a linear pendulum
9. Control of a rotational pendulum
10. Control of a reaction pendulum
11. 2D ball balancing
12. Maglev
13. Magnetic bearing (Maglev 2)
14. Quanser Aero
15. Quadcopter

Assignment form (file on webeep)

POLITECNICO MILANO 1863

Automation and Control Laboratory A.Y. 2023/24

Prof. HR Karimi

Dr. A Fontanella
Dr H Zambrano

Team _____

Person code	First name	Last name

Order of preference	Experience
	Automation of an elevator plant
	Control of electric drives and pneumatic actuators in an automated plant
	Automation of a storage warehouse
	Control of a PMDC – PMDC system
	Control of a PMSM – PMDC system
	Control of linear vibrations
	Control of a linear pendulum
	Control of a rotational pendulum I
	Control of a rotational pendulum II
	Control of a Reaction Pendulum
	Industrial plant
	2D ball balancing
	Maglev
	Magnetic bearing (Maglev 2)
	Quanser Aero
	Quadcopter

Form to be filled and returned or sent by e-mail (hamidreza.karimi@polimi.it) by Friday, 23rd , 2024, before 2 pm.