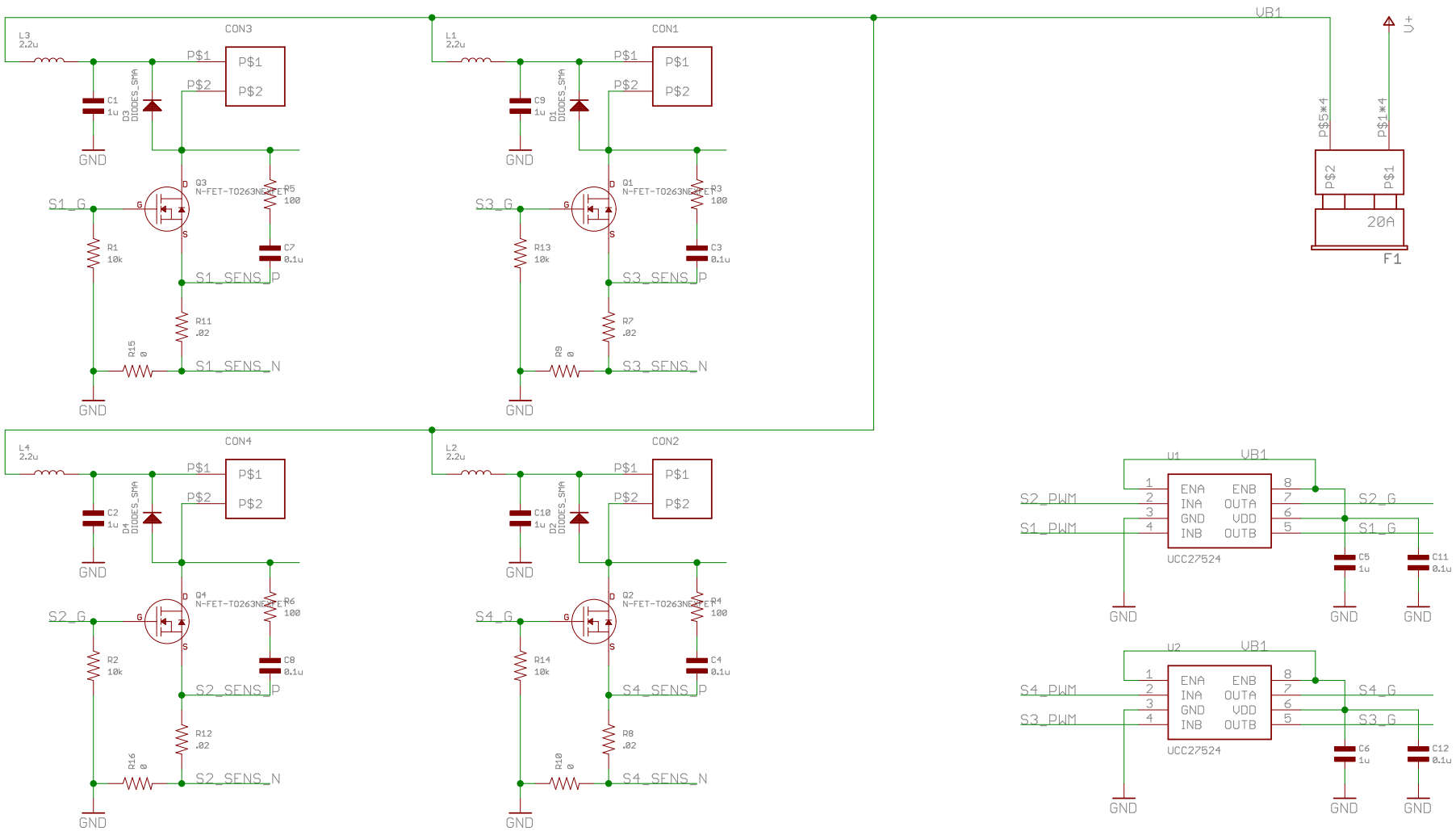

POLYSYNC

TITLE: polysync_braking2

Document Number:

REV: 0

Date: 12/6/16 4:06 PM

Sheet: 1/5

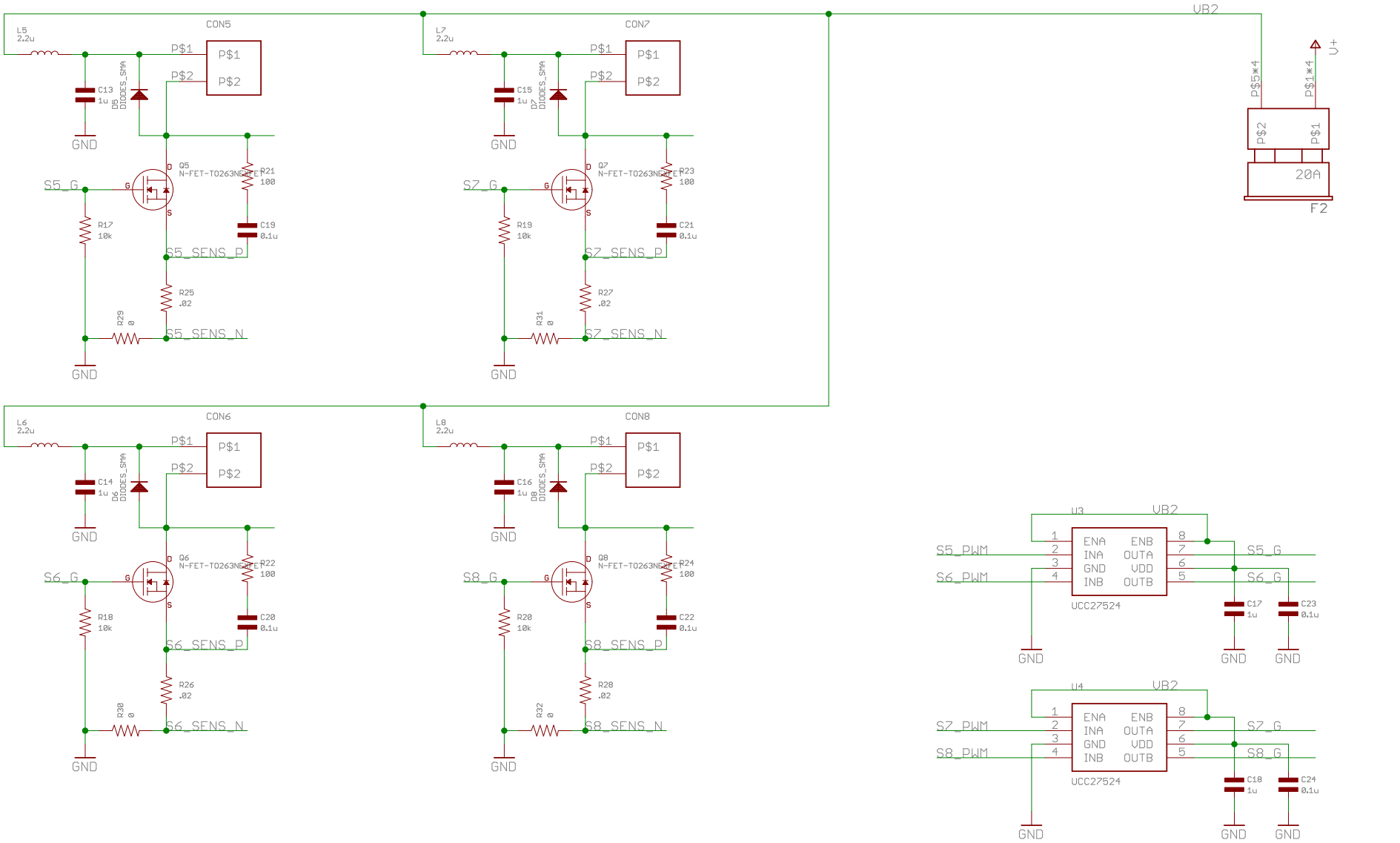

POLYSYNC

TITLE: polysync_braking2

Document Number:

REV:

Date: 12/6/16 4:06 PM

Sheet: 2/5

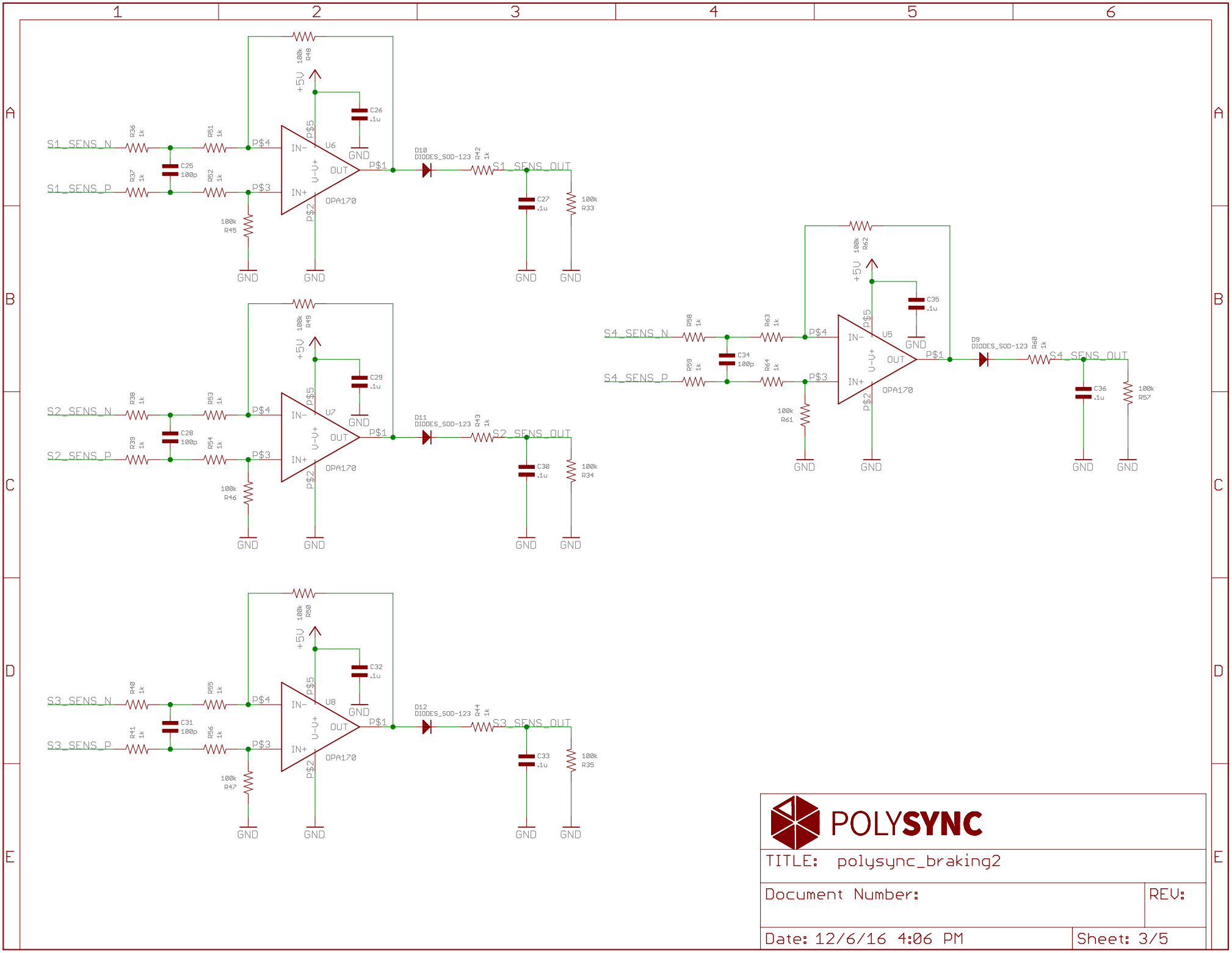
S1_SENS_N
S1_SENS_P
R36 1k
R37 1k
C25 100p
R51 1k
R52 1k
100k R45
100k R48
+5V
C26 .1u
U6
OPA170
IN-
IN+
OUT
V-
V+
P$1
P$2
P$3
P$4
P$5
GND
D10 DIODES_SOD-123
R42 1k
S1_SENS_OUT
C27 .1u
100k R33
S2_SENS_N
S2_SENS_P
R38 1k
R39 1k
C28 100p
R53 1k
R54 1k
100k R46
100k R49
C29 .1u
U7
D11 DIODES_SOD-123
R43 1k
S2_SENS_OUT
C30 .1u
100k R34
S3_SENS_N
S3_SENS_P
R40 1k
R41 1k
C31 100p
R55 1k
R56 1k
100k R47
100k R50
C32 .1u
U8
D12 DIODES_SOD-123
R44 1k
S3_SENS_OUT
C33 .1u
100k R35
S4_SENS_N
S4_SENS_P
R58 1k
R59 1k
C34 100p
R63 1k
R64 1k
100k R61
100k R62
C35 .1u
U5
D9 DIODES_SOD-123
R60 1k
S4_SENS_OUT
C36 .1u
100k R57
POLYSYNC
TITLE: polysync_braking2
Document Number:
REV:
Date: 12/6/16 4:06 PM
Sheet: 3/5

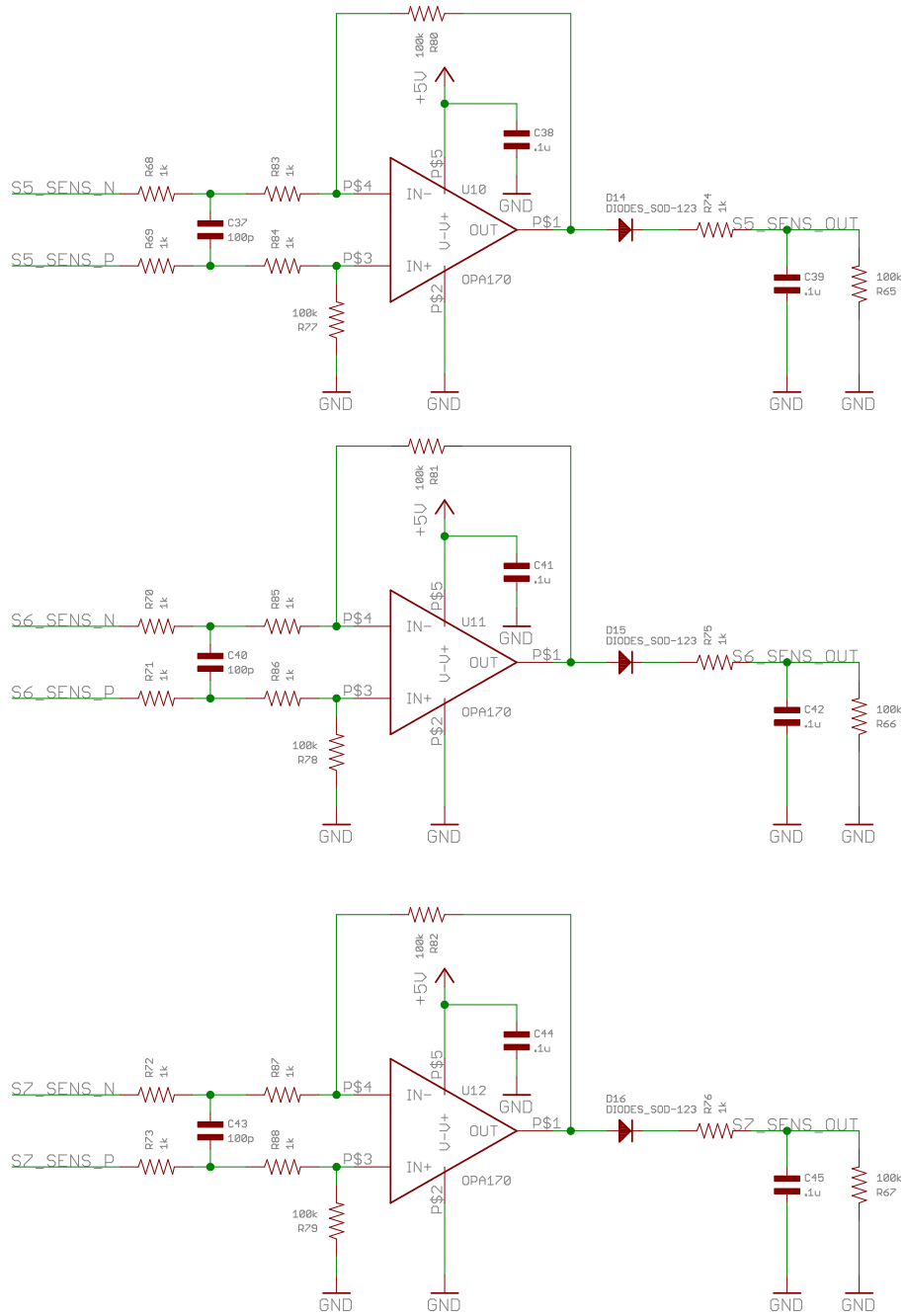

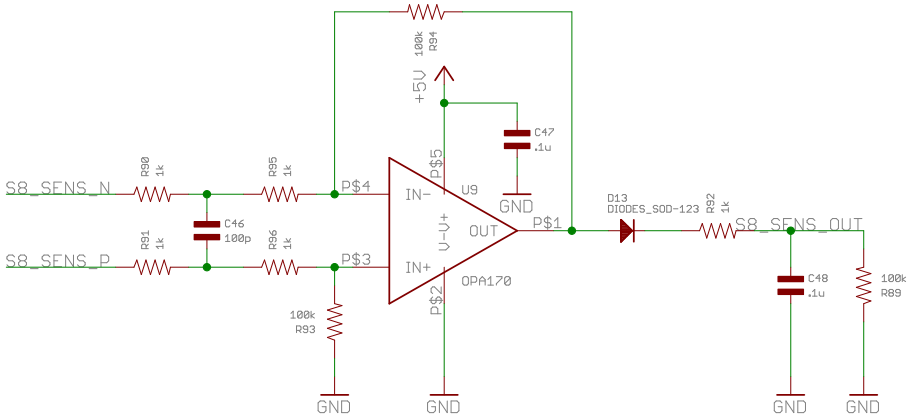

POLYSYNC

TITLE: polysync_braking2

Document Number:

REV:

Date: 12/6/16 4:06 PM

Sheet: 4/5

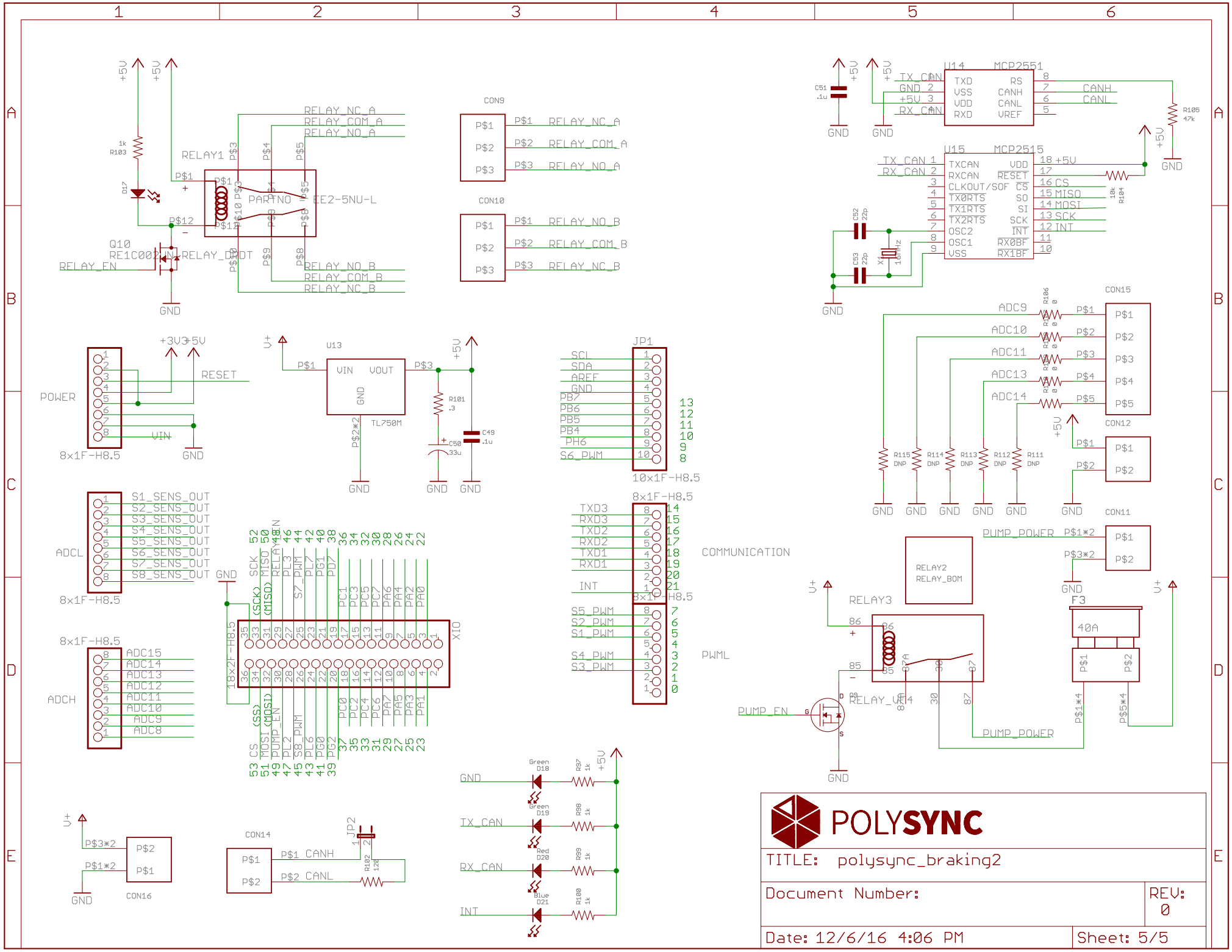
RELAY1
PARTNO
EE2-5NU-L
RELAY_NC_A
RELAY_COM_A
RELAY_NO_A
RELAY_NO_B
RELAY_COM_B
RELAY_NC_B
Q10
RE1C002UN
RELAY_DPDT
RELAY_EN
CON9
CON10
U14
MCP2551
U15
MCP2515
TXCAN
RXCAN
CLKOUT/SOF
TX0RTS
TX1RTS
TX2RTS
OSC2
OSC1
VSS
VDD
RESET
CS
SO
SI
SCK
INT
RX0BF
RX1BF
TXD
RXD
RS
CANH
CANL
VREF
TX_CAN
RX_CAN
CANH
CANL
POWER
8x1F-H8.5
RESET
VIN
U13
TL750M
VIN
VOUT
GND
JP1
10x1F-H8.5
SCL
SDA
AREF
PB7
PB6
PB5
PB4
PH6
S6_PWM
CON15
CON12
CON11
ADC9
ADC10
ADC11
ADC13
ADC14
ADCL
S1_SENS_OUT
S2_SENS_OUT
S3_SENS_OUT
S4_SENS_OUT
S5_SENS_OUT
S6_SENS_OUT
S7_SENS_OUT
S8_SENS_OUT
ADCH
ADC15
ADC14
ADC13
ADC12
ADC11
ADC10
ADC9
ADC8
18x2F-H8.5
XIO
TXD3
RXD3
TXD2
RXD2
TXD1
RXD1
INT
COMMUNICATION
S5_PWM
S2_PWM
S1_PWM
S4_PWM
S3_PWM
PWML
PUMP_POWER
RELAY2
RELAY_BOM
RELAY3
RELAY_DPDT
PUMP_EN
F3
40A
CON16
CON14
CANH
CANL
JP2
GND
TX_CAN
RX_CAN
INT
POLYSYNC
TITLE: polysync_braking2
Document Number:
REV: 0
Date: 12/6/16 4:06 PM
Sheet: 5/5