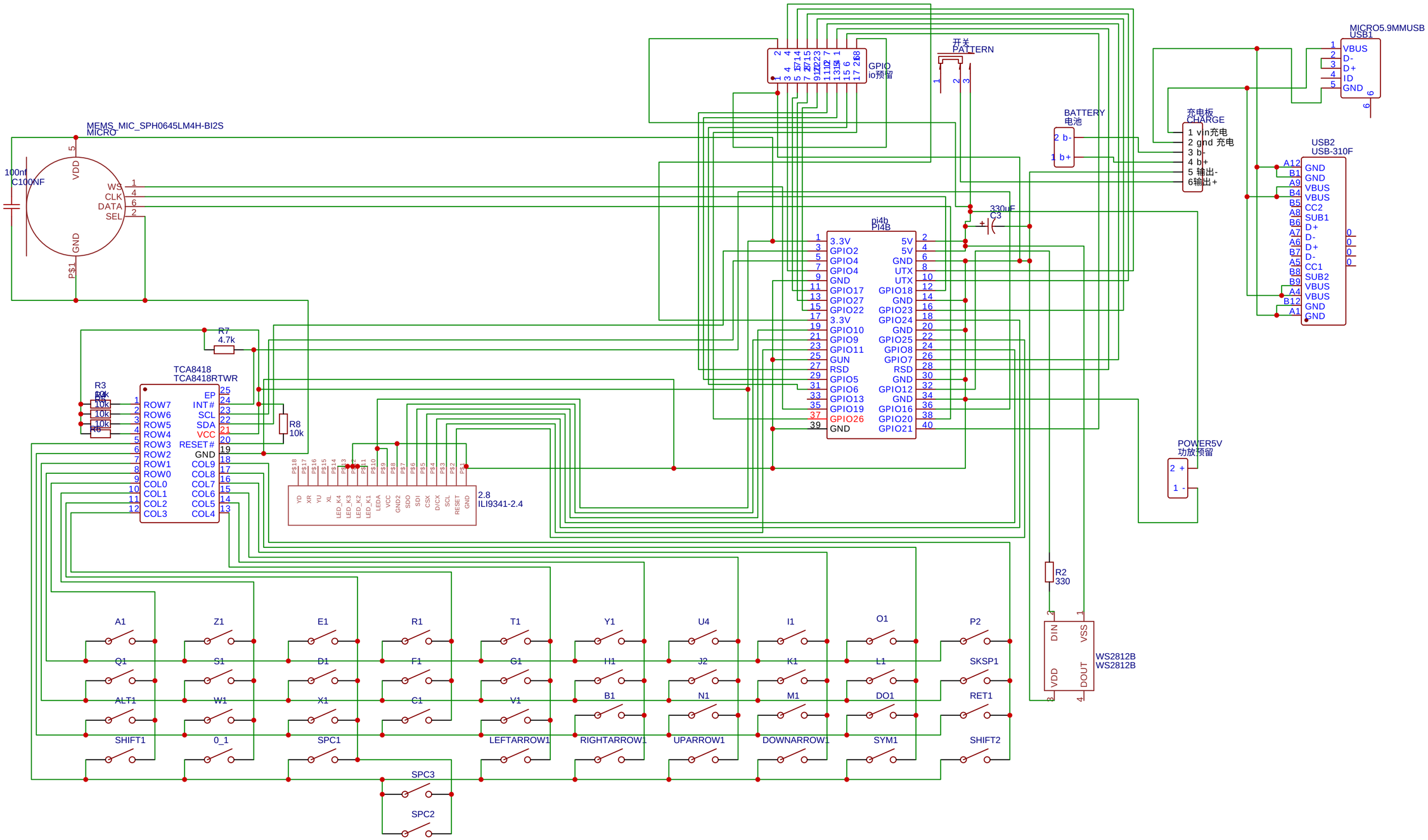

TITLE: 树莓派键盘	REV: 1.0
立创EDA	Company: FMK
	Sheet: 1/1
Date: 2019-12-23	Drawn By: hbk444