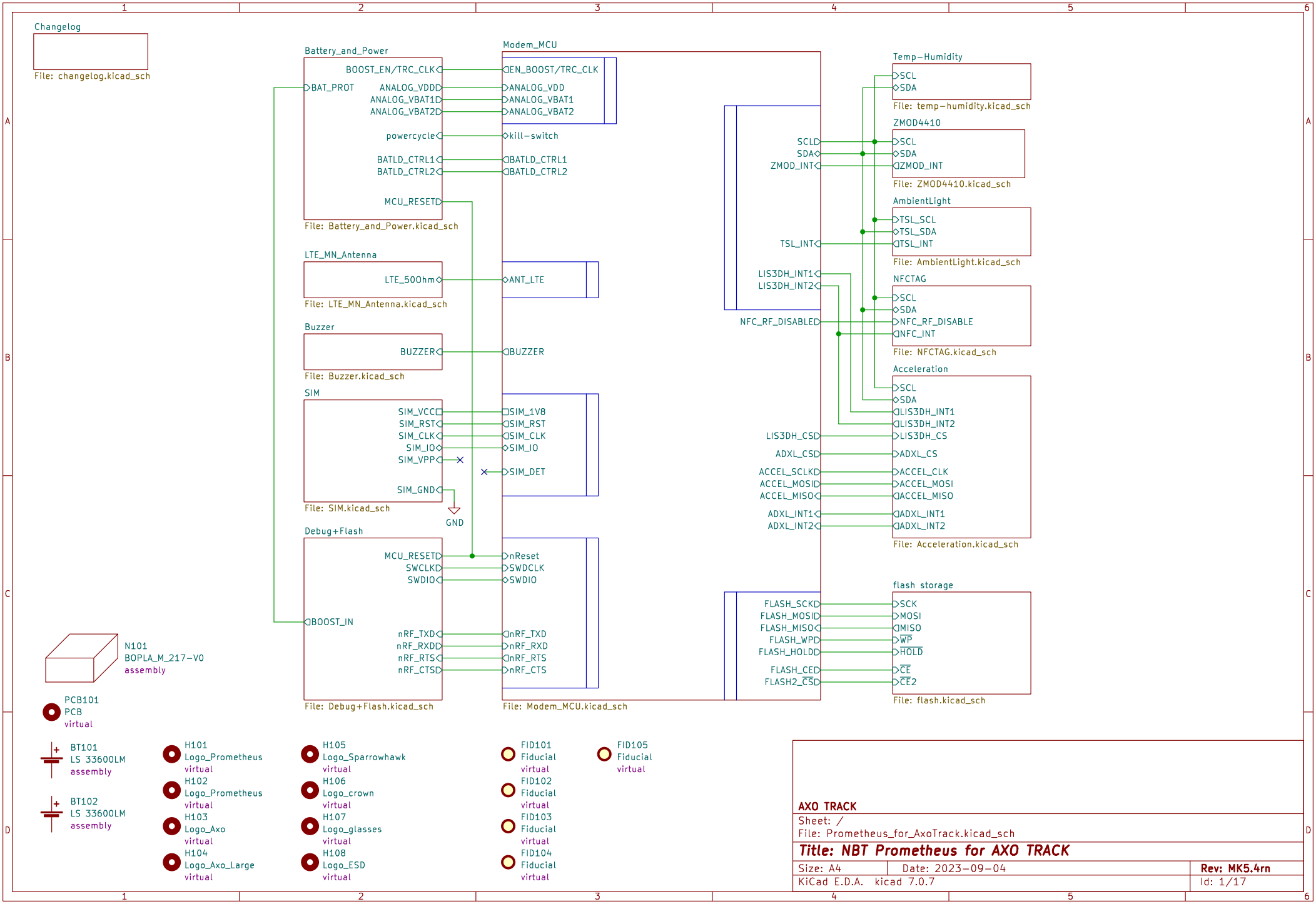
Changelog
File: changelog.kicad_sch
Battery_and_Power
BOOST_EN/TRC_CLK
BAT_PROT
ANALOG_VDD
ANALOG_VBAT1
ANALOG_VBAT2
powercycle
BATLD_CTRL1
BATLD_CTRL2
MCU_RESET
File: Battery_and_Power.kicad_sch
LTE_MN_Antenna
LTE_50Ohm
File: LTE_MN_Antenna.kicad_sch
Buzzer
BUZZER
File: Buzzer.kicad_sch
SIM
SIM_VCC
SIM_RST
SIM_CLK
SIM_IO
SIM_VPP
SIM_GND
File: SIM.kicad_sch
GND
Debug+Flash
MCU_RESET
SWCLK
SWDIO
BOOST_IN
nRF_TXD
nRF_RXD
nRF_RTS
nRF_CTS
File: Debug+Flash.kicad_sch
Modem_MCU
EN_BOOST/TRC_CLK
ANALOG_VDD
ANALOG_VBAT1
ANALOG_VBAT2
kill-switch
BATLD_CTRL1
BATLD_CTRL2
ANT_LTE
BUZZER
SIM_1V8
SIM_RST
SIM_CLK
SIM_IO
SIM_DET
nReset
SWDCLK
SWDIO
nRF_TXD
nRF_RXD
nRF_RTS
nRF_CTS
File: Modem_MCU.kicad_sch
SCL
SDA
ZMOD_INT
TSL_INT
LIS3DH_INT1
LIS3DH_INT2
NFC_RF_DISABLED
LIS3DH_CS
ADXL_CS
ACCEL_SCLK
ACCEL_MOSI
ACCEL_MISO
ADXL_INT1
ADXL_INT2
FLASH_SCK
FLASH_MOSI
FLASH_MISO
FLASH_WP
FLASH_HOLD
FLASH_CE
FLASH2_CS
Temp-Humidity
SCL
SDA
File: temp-humidity.kicad_sch
ZMOD4410
SCL
SDA
ZMOD_INT
File: ZMOD4410.kicad_sch
AmbientLight
TSL_SCL
TSL_SDA
TSL_INT
File: AmbientLight.kicad_sch
NFCTAG
SCL
SDA
NFC_RF_DISABLE
NFC_INT
File: NFCTAG.kicad_sch
Acceleration
SCL
SDA
LIS3DH_INT1
LIS3DH_INT2
LIS3DH_CS
ADXL_CS
ACCEL_CLK
ACCEL_MOSI
ACCEL_MISO
ADXL_INT1
ADXL_INT2
File: Acceleration.kicad_sch
flash storage
SCK
MOSI
MISO
WP
HOLD
CE
CE2
File: flash.kicad_sch
N101
BOPLA_M_217-V0
assembly
PCB101
PCB
virtual
BT101
LS 33600LM
assembly
BT102
LS 33600LM
assembly
H101
Logo_Prometheus
virtual
H102
Logo_Prometheus
virtual
H103
Logo_Axo
virtual
H104
Logo_Axo_Large
virtual
H105
Logo_Sparrowhawk
virtual
H106
Logo_crown
virtual
H107
Logo_glasses
virtual
H108
Logo_ESD
virtual
FID101
Fiducial
virtual
FID102
Fiducial
virtual
FID103
Fiducial
virtual
FID104
Fiducial
virtual
FID105
Fiducial
virtual
AXO TRACK
Sheet: /
File: Prometheus_for_AxoTrack.kicad_sch
Title: NBT Prometheus for AXO TRACK
Size: A4
Date: 2023-09-04
Rev: MK5.4rn
KiCad E.D.A. kicad 7.0.7
Id: 1/17

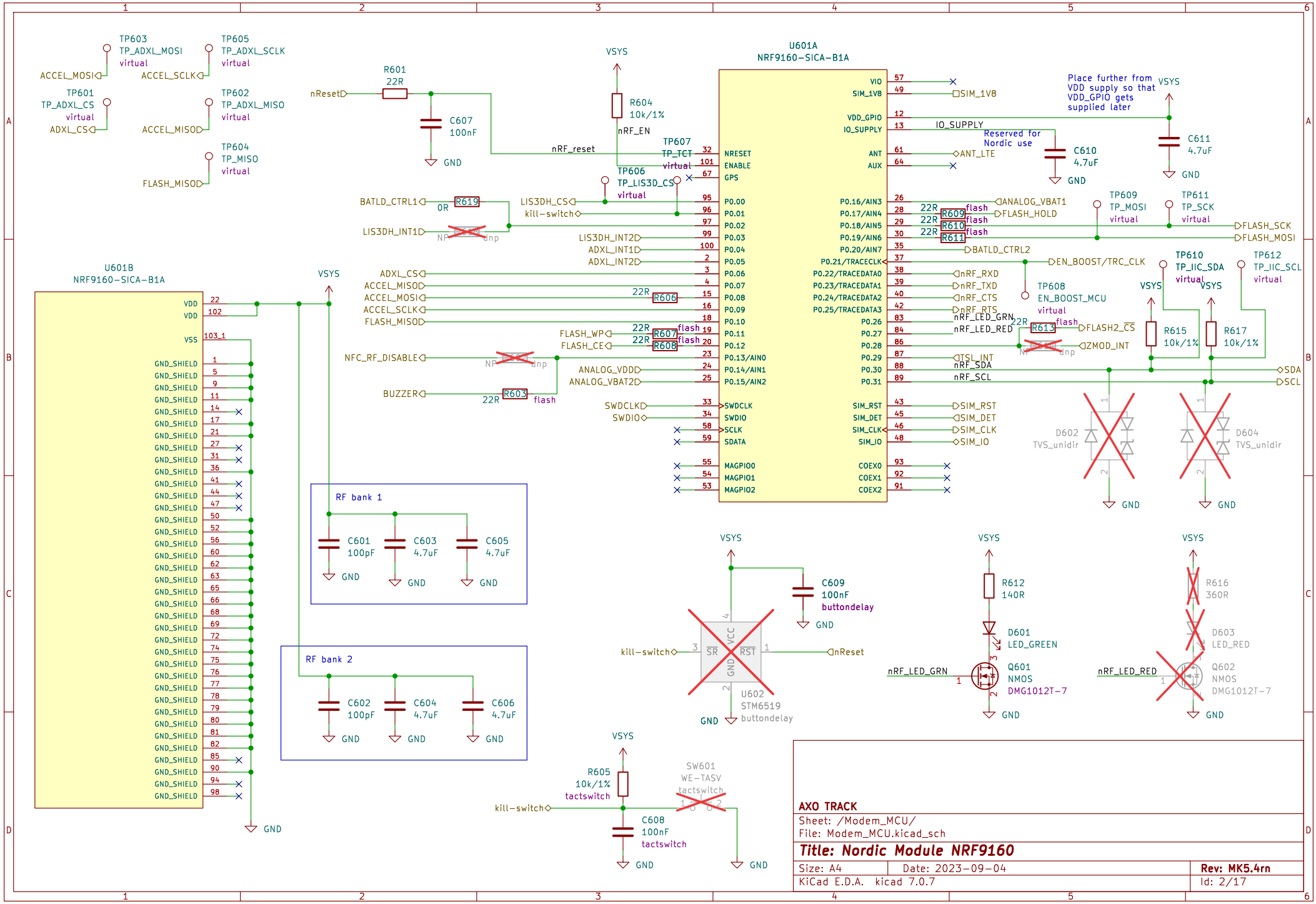
U601A
NRF9160-SICA-B1A
U601B
NRF9160-SICA-B1A
TP603 TP_ADXL_MOSI virtual
TP605 TP_ADXL_SCLK virtual
TP601 TP_ADXL_CS virtual
TP602 TP_ADXL_MISO virtual
TP604 TP_MISO virtual
TP607 TP_TCT virtual
TP606 TP_LIS3D_CS virtual
TP609 TP_MOSI virtual
TP611 TP_SCK virtual
TP610 TP_IIC_SDA virtual
TP612 TP_IIC_SCL virtual
TP608 EN_BOOST_MCU virtual
Place further from VDD supply so that VDD_GPIO gets supplied later
Reserved for Nordic use
RF bank 1
RF bank 2
U602 STM6519 buttondelay
SW601 WE-TASV tactswitch
D601 LED_GREEN
D603 LED_RED
Q601 NMOS DMG1012T-7
Q602 NMOS DMG1012T-7
D602 TVS_unidir
D604 TVS_unidir
AXO TRACK
Sheet: /Modem_MCU/
File: Modem_MCU.kicad_sch
Title: Nordic Module NRF9160
Size: A4
Date: 2023-09-04
Rev: MK5.4rn
KiCad E.D.A. kicad 7.0.7
Id: 2/17

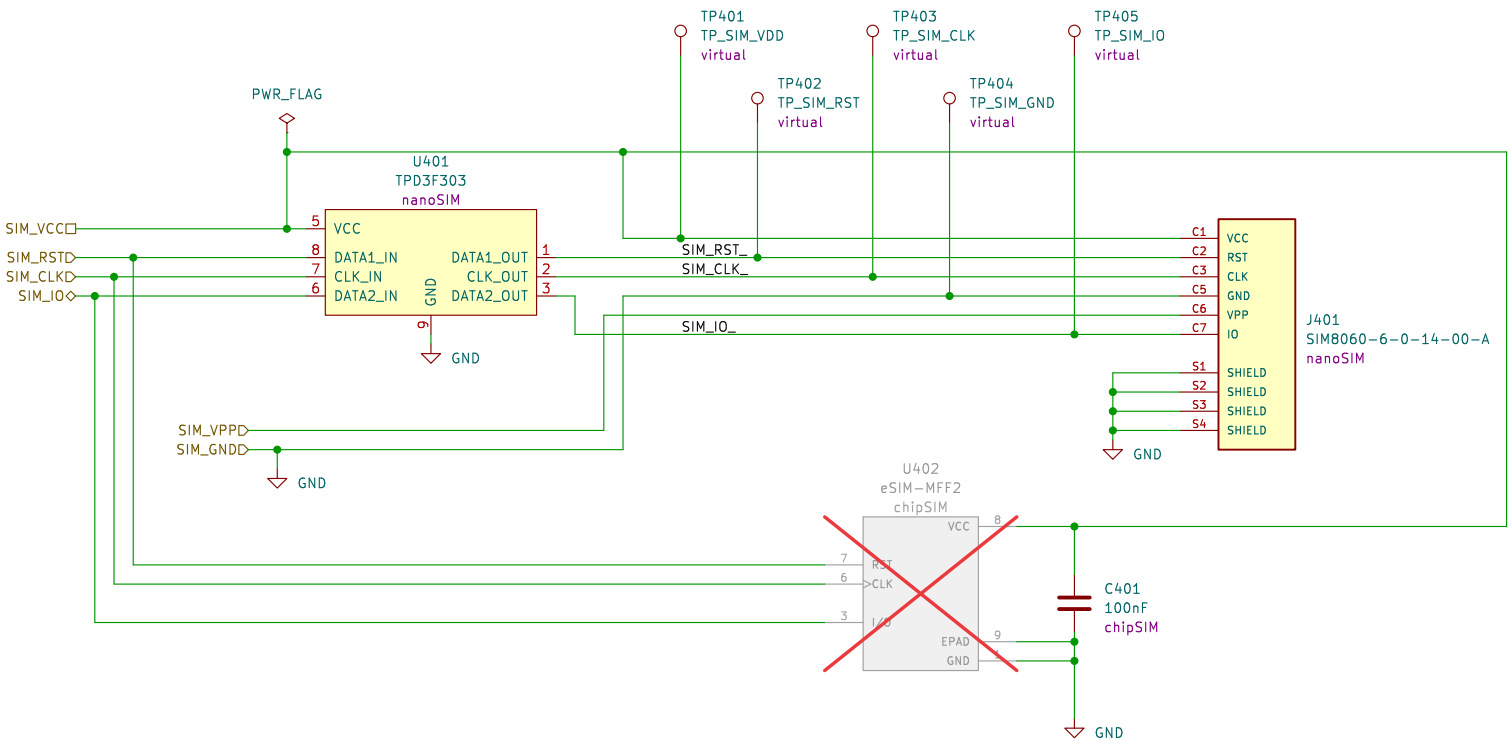

AXO TRACK

Sheet: /SIM/
File: SIM.kicad_sch

Title: SIM

Size: A4	Date: 2023-09-04	**Rev: MK5.4rn**
KiCad E.D.A. kicad 7.0.7		Id: 3/17

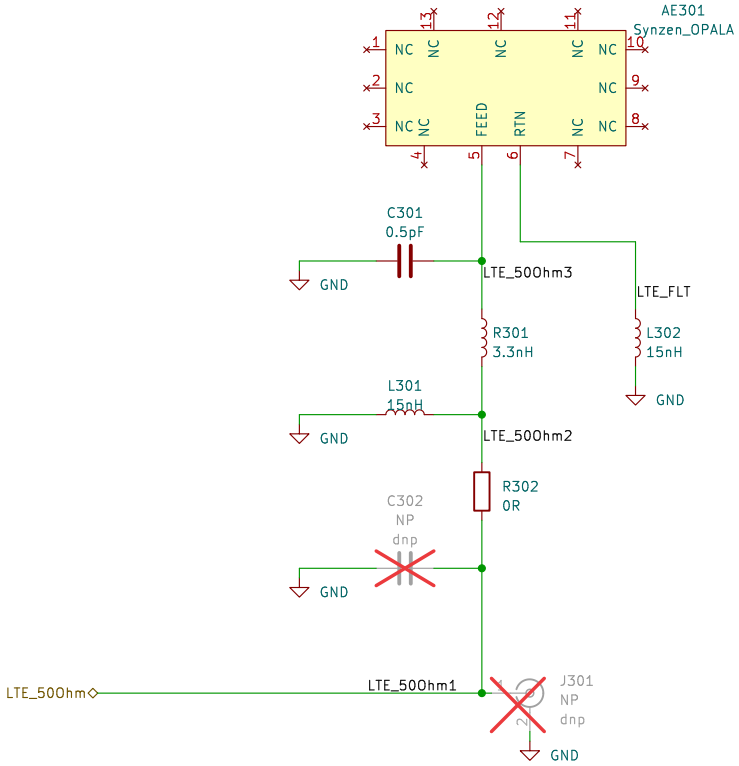

AXO TRACK

Sheet: /LTE_MN_Antenna/
File: LTE_MN_Antenna.kicad_sch

Title: cellular antenna

Size: A4	Date: 2023-09-04	**Rev: MK5.4rn**
KiCad E.D.A. kicad 7.0.7		Id: 4/17

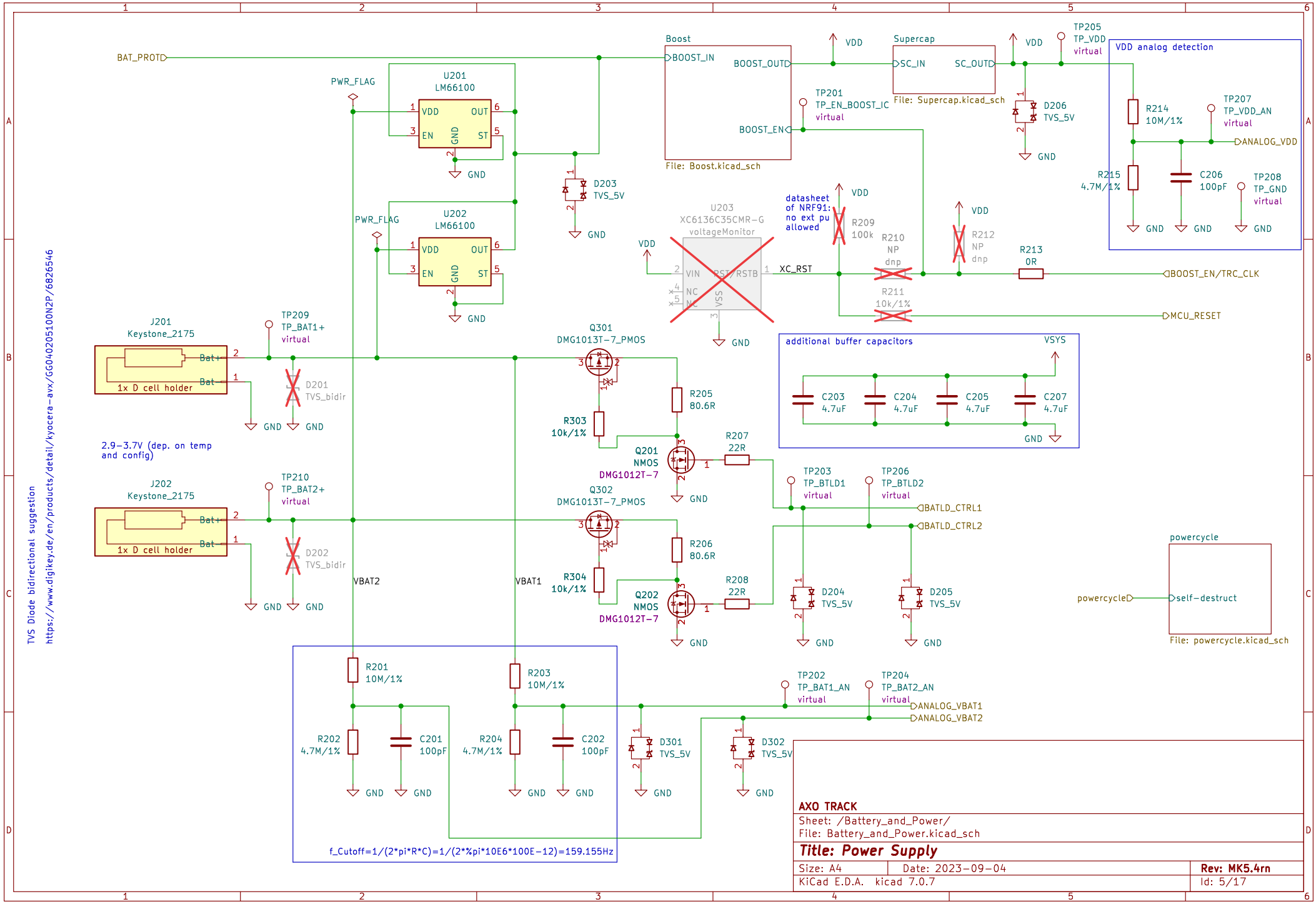

AXO TRACK

Sheet: /Battery_and_Power/
File: Battery_and_Power.kicad_sch

Title: Power Supply

Size: A4	Date: 2023-09-04	Rev: MK5.4rn
KiCad E.D.A. kicad 7.0.7		Id: 5/17

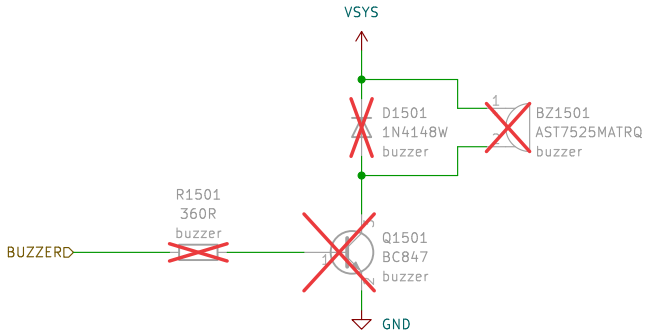

AXO TRACK

Sheet: /Buzzer/
File: Buzzer.kicad_sch

Title: Buzzer

Size: A4	Date: 2023-09-04	**Rev: MK5.4rn**
KiCad E.D.A. kicad 7.0.7		Id: 6/17

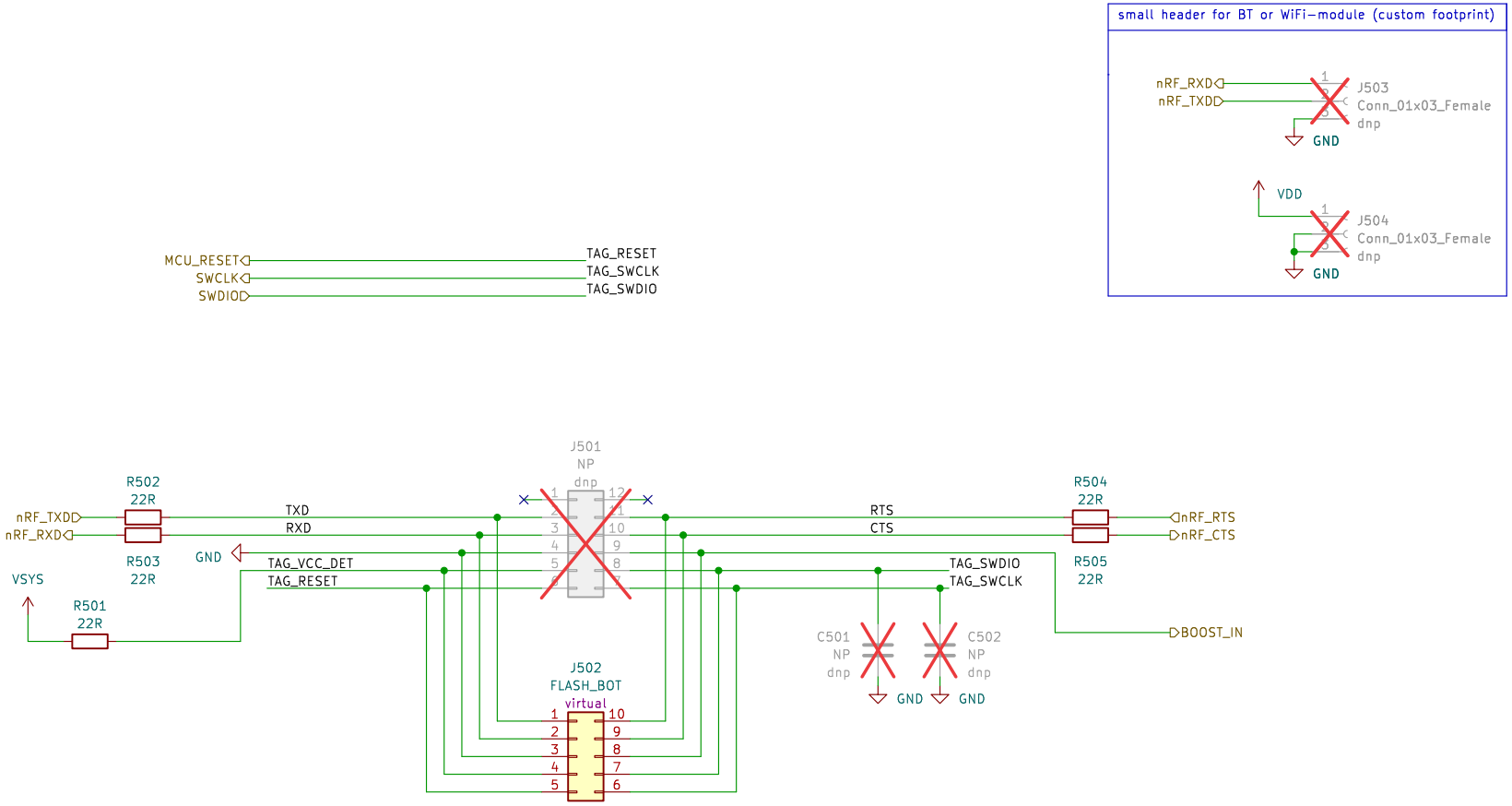

AXO TRACK

Sheet: /Debug+Flash/
File: Debug+Flash.kicad_sch

Title: Flash and Debug

Size: A4	Date: 2023-09-04	**Rev: MK5.4rn**
KiCad E.D.A. kicad 7.0.7		Id: 7/17

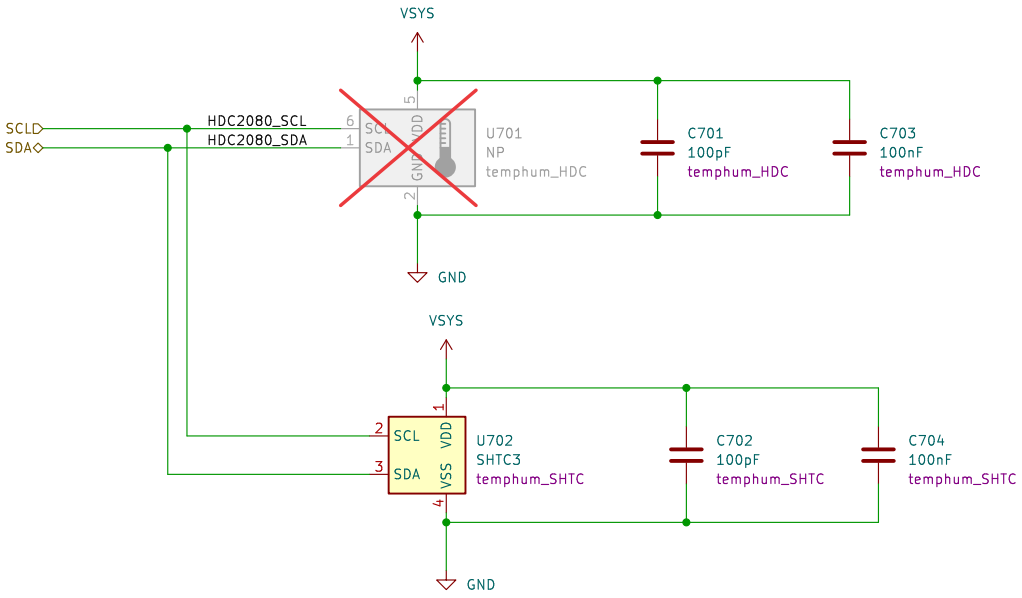

AXO TRACK

Sheet: /Temp-Humidity/
File: temp-humidity.kicad_sch

Title: humidity and temperature sensor

Size: A4	Date: 2023-09-04	**Rev: MK5.4rn**
KiCad E.D.A. kicad 7.0.7		Id: 8/17

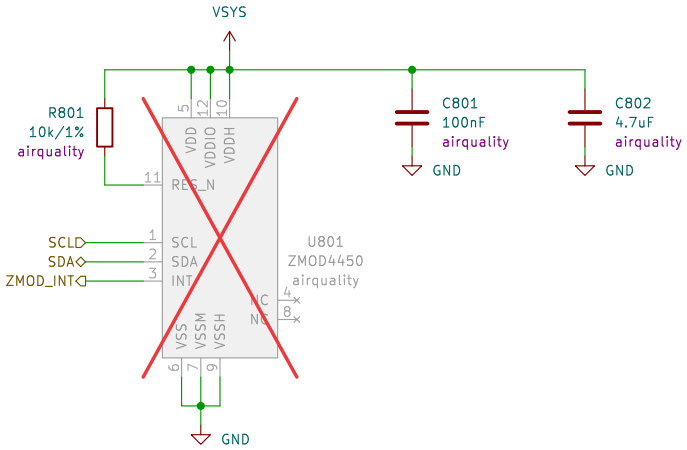

AXO TRACK

Sheet: /ZMOD4410/
File: ZMOD4410.kicad_sch

Title: Refrigerator Air Quality Sensor (IDT Renesas)

Size: A4	Date: 2023-09-04	**Rev: MK5.4rn**
KiCad E.D.A. kicad 7.0.7		Id: 9/17

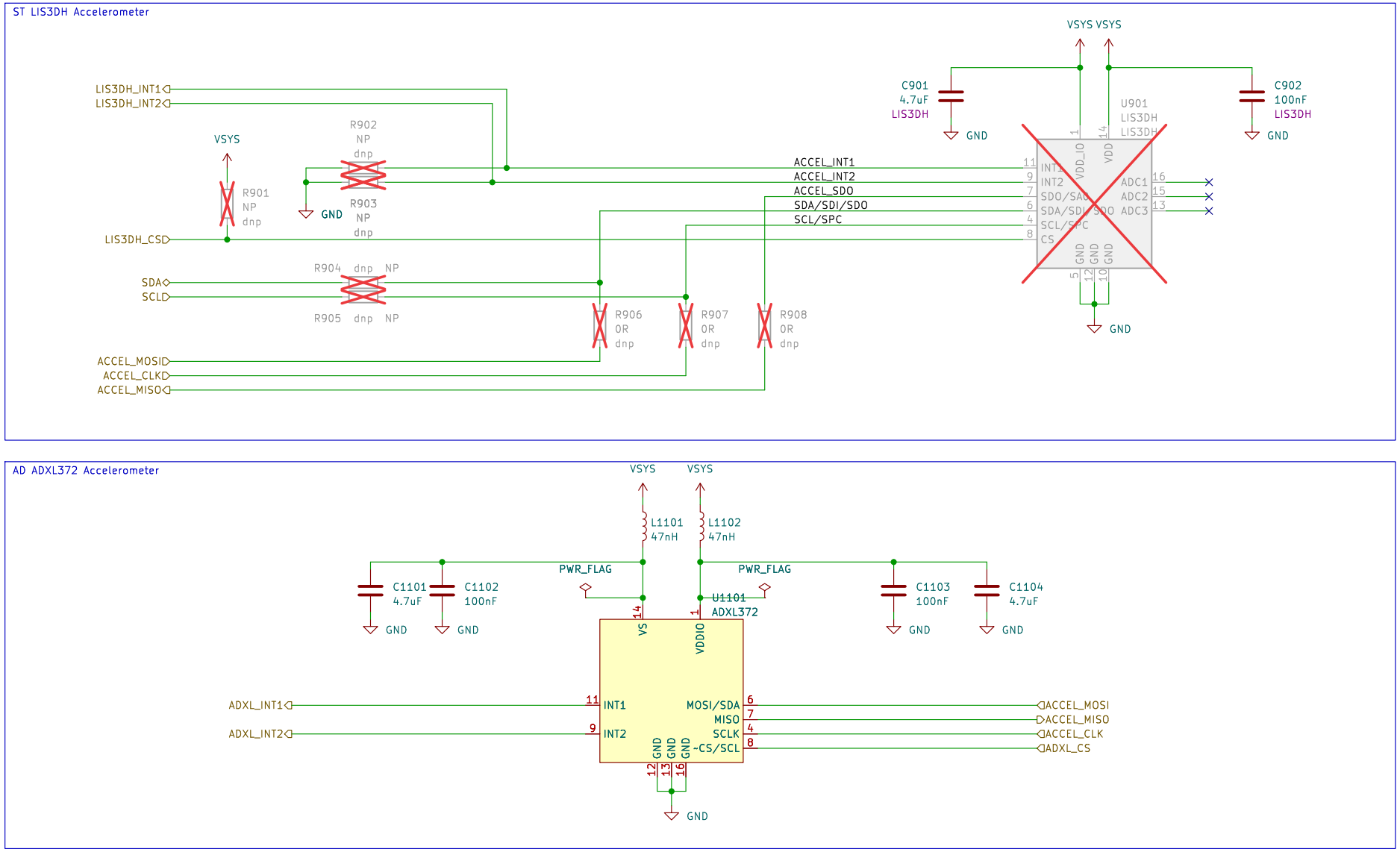

AXO TRACK

Sheet: /Acceleration/
File: Acceleration.kicad_sch

Title: Acceleration sensor

Size: A4	Date: 2023-09-04	**Rev: MK5.4rn**
KiCad E.D.A. kicad 7.0.7		Id: 10/17

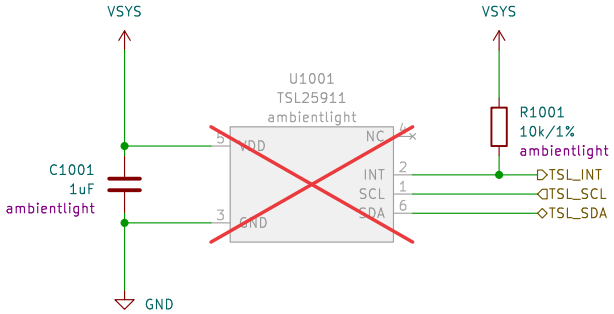

AXO TRACK

Sheet: /AmbientLight/
File: AmbientLight.kicad_sch

Title: Ambient light sensor

Size: A4	Date: 2023-09-04	**Rev: MK5.4rn**
KiCad E.D.A. kicad 7.0.7		Id: 11/17

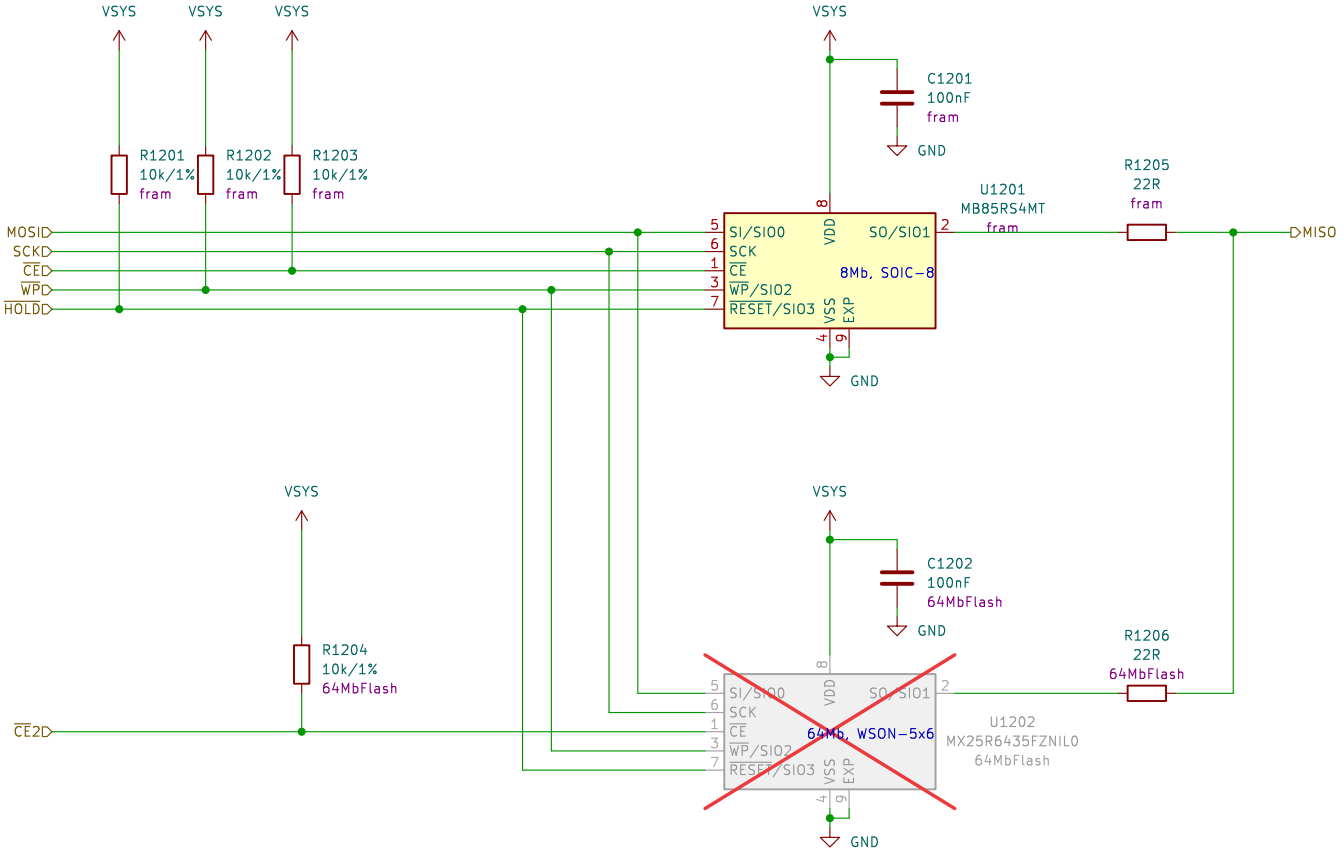

AXO TRACK

Sheet: /flash storage/
File: flash.kicad_sch

Title: NOR Flash and RAM

Size: A4	Date: 2023-09-04	**Rev: MK5.4rn**
KiCad E.D.A. kicad 7.0.7		Id: 14/17

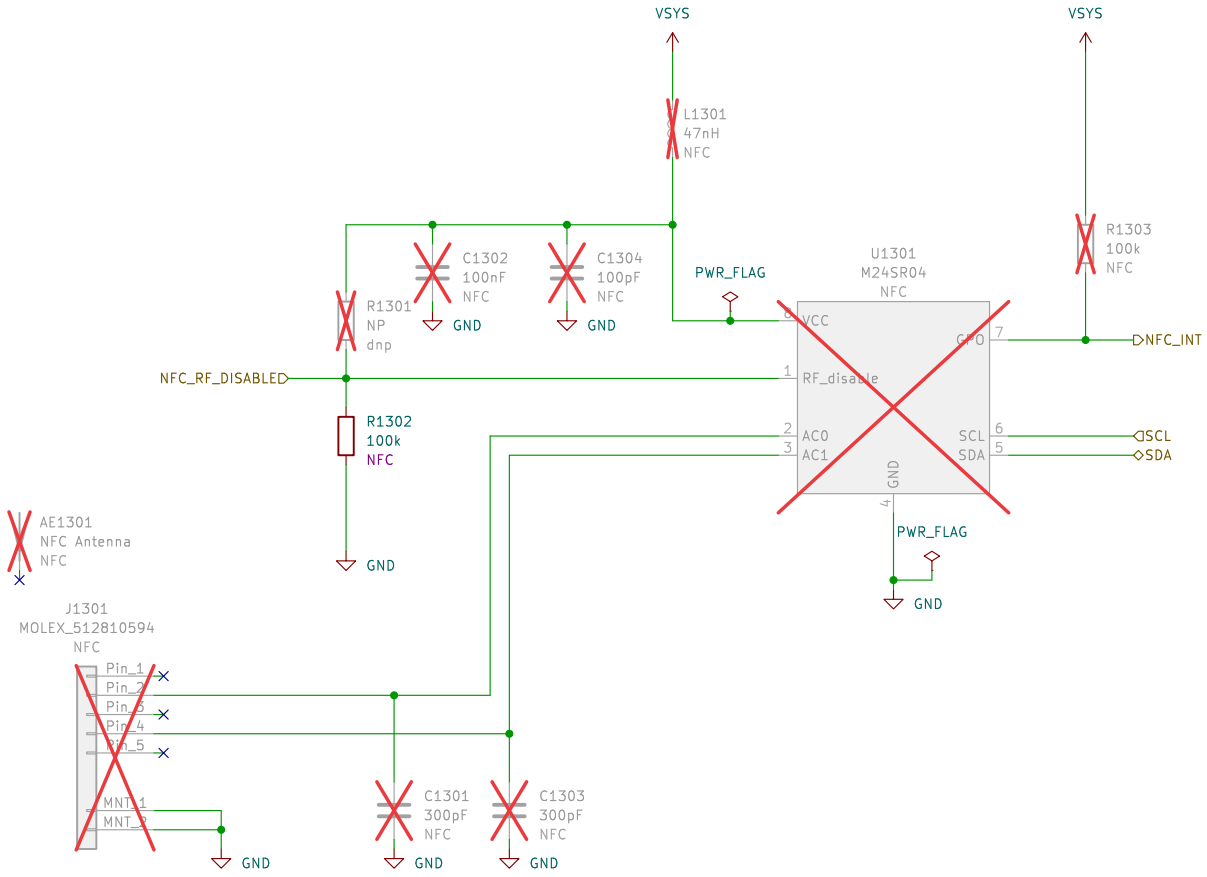

https://infocenter.nordicsemi.com/pdf/nwp_026.pdf
https://community.nxp.com/t5/NFC/bd-p/nfc

AXO TRACK

Sheet: /NFCTAG/
File: NFCTAG.kicad_sch

Title: NFC TAG

Size: A4	Date: 2023-09-04	**Rev: MK5.4rn**
KiCad E.D.A. kicad 7.0.7		Id: 16/17

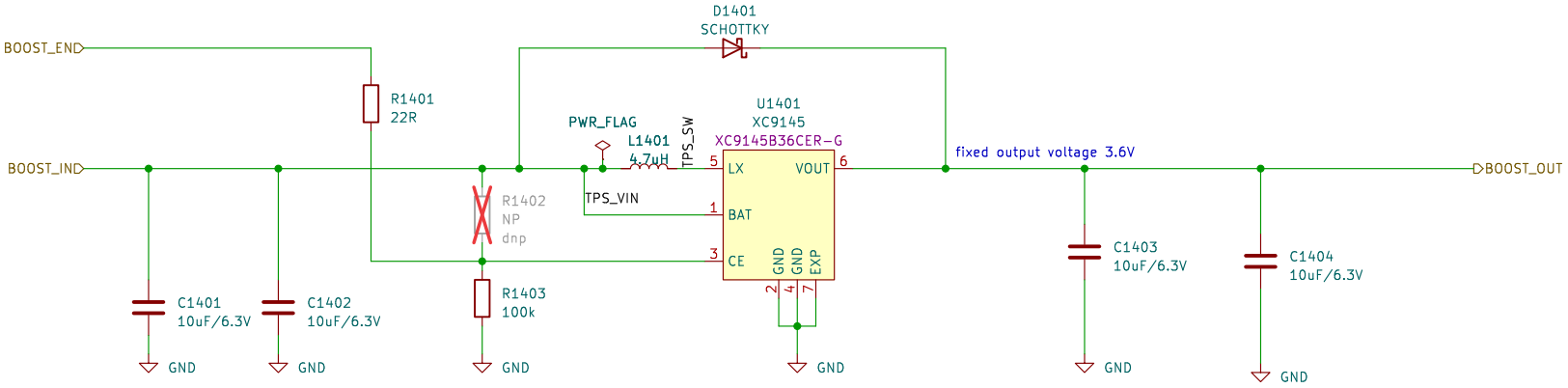

AXO TRACK

Sheet: /Battery_and_Power/Boost/
File: Boost.kicad_sch

Title:

Size: A4	Date: 2023-09-04	**Rev: MK5.4rn**
KiCad E.D.A. kicad 7.0.7		Id: 17/17

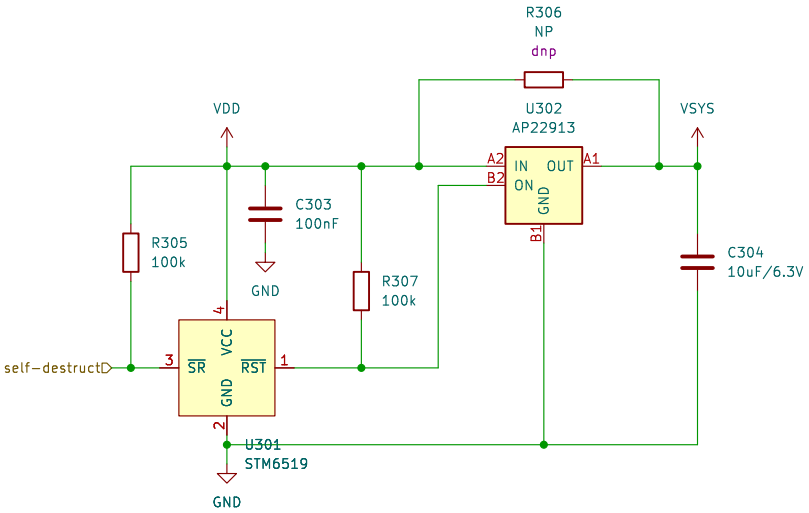

AXO TRACK

Sheet: /Battery_and_Power/powercycle/
File: powercycle.kicad_sch

Title:

Size: A4	Date: 2023-09-04	**Rev:**
KiCad E.D.A. kicad 7.0.7		Id: 17/17

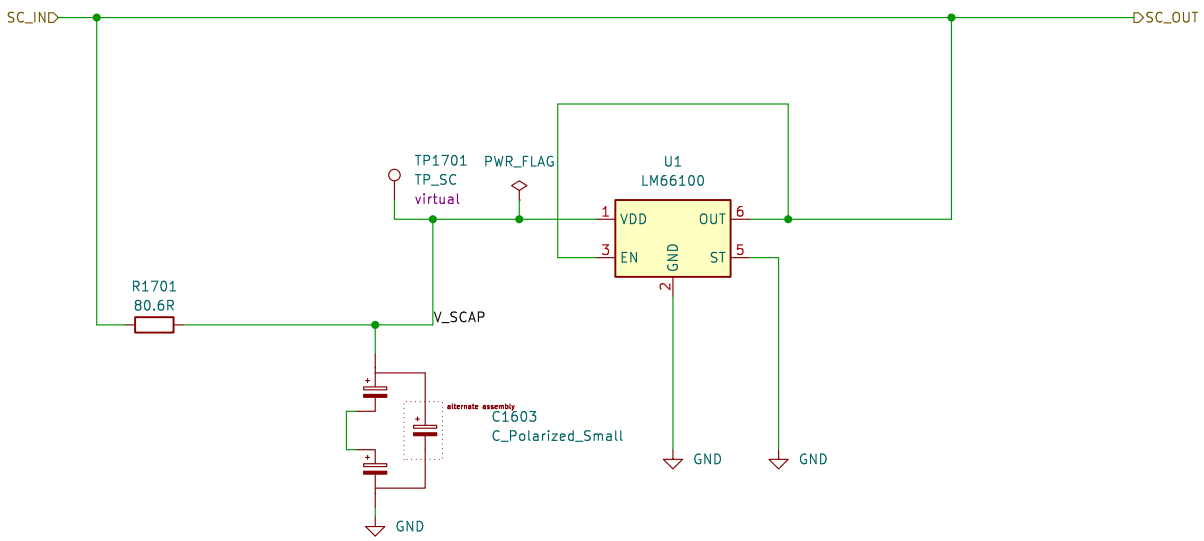

AXO TRACK

Sheet: /Battery_and_Power/Supercap/
File: Supercap.kicad_sch

Title:

Size: A4	Date: 2023-09-04	**Rev: MK5.4rn**
KiCad E.D.A. kicad 7.0.7		Id: 18/17

5.4n -> 5.4rn
- added self-powercycle circuit
- modified battery holder footprint (metallized mounting holes, respositioned solder pads for easier wire soldering)

5.4m -> 5.4n
- added silkscreen frame for QR code placement
- optimized package for U1201 (manufacturability)
- replaced XC8111 with LM66100
- added Q301, Q302 (reverse polarity protection)
- added D301, D302 (reverse polarity protection)
- changed symbol for 5V TVS Diode Array (better readability)
- renamed SPI signals for flash on MCU side for better readability (schematics)
- added R618, R619 for separation of LI3DH interrupt line and battery load control 1

5.4 -> 5.4m
- improved WSON-8x6 footprint

5.3 -> 5.4
- replaced BQ35000 with custom internal battery resistance test circuit (Q201, Q202)
- added second flash chip option for WSON-5x6 packages (U1202)

5.3 -> 5.3m
- corrected L6 footprint to 3020

5.2 -> 5.3
- replaced TPS610995 with XC9145 boost converter
- replaced all LM66100 with XC8111
- added mounting holes to battery holders
- changed flash package (U12) from SOIC-8 to WSON-8(5x6mm)
- changed flash (U12) pin 7 function from hold to reset

AXO TRACK

Sheet: /Changelog/
File: changelog.kicad_sch

Title: changelog

Size: A4	Date: 2023-09-04	**Rev: MK5.4rn**
KiCad E.D.A. kicad 7.0.7		Id: 19/17