POWER

+12V
M_5V for IC
D_5V for RELAY

檔案： S32K_EVB_PW.kicad_sch

S32K_EVB_CONN

S32K_EVB CONN

檔案： S32K_EVB_CONN.kicad_sch

S32K_EVB_AI

NTC*5
AI*15

檔案： S32K_EVB_AI.kicad_sch

S32K_EVB_AO

0-10V *1
I2C 4-20mA*2
MOS SHIFT *3
LR7843 *4

檔案： S32K_EVB_AO.kicad_sch

S32K_EVB_DI

DI*8

檔案： S32K_EVB_DI.kicad_sch

S32K_EVB_DO_MOS

DO_MOS *6

檔案： S32K_EVB_DI_MOS.kicad_sch

S32K_EVB_DO_RY

10A RELAY *21
30A RELAY *2

檔案： S32K_EVB_DO_RY.kicad_sch

Sheet: /
File: S32K_EVB_IO_PCB.kicad_sch

Title:

Size: A4	Date:	Rev:
KiCad E.D.A. 8.0.5		Id: 1/8

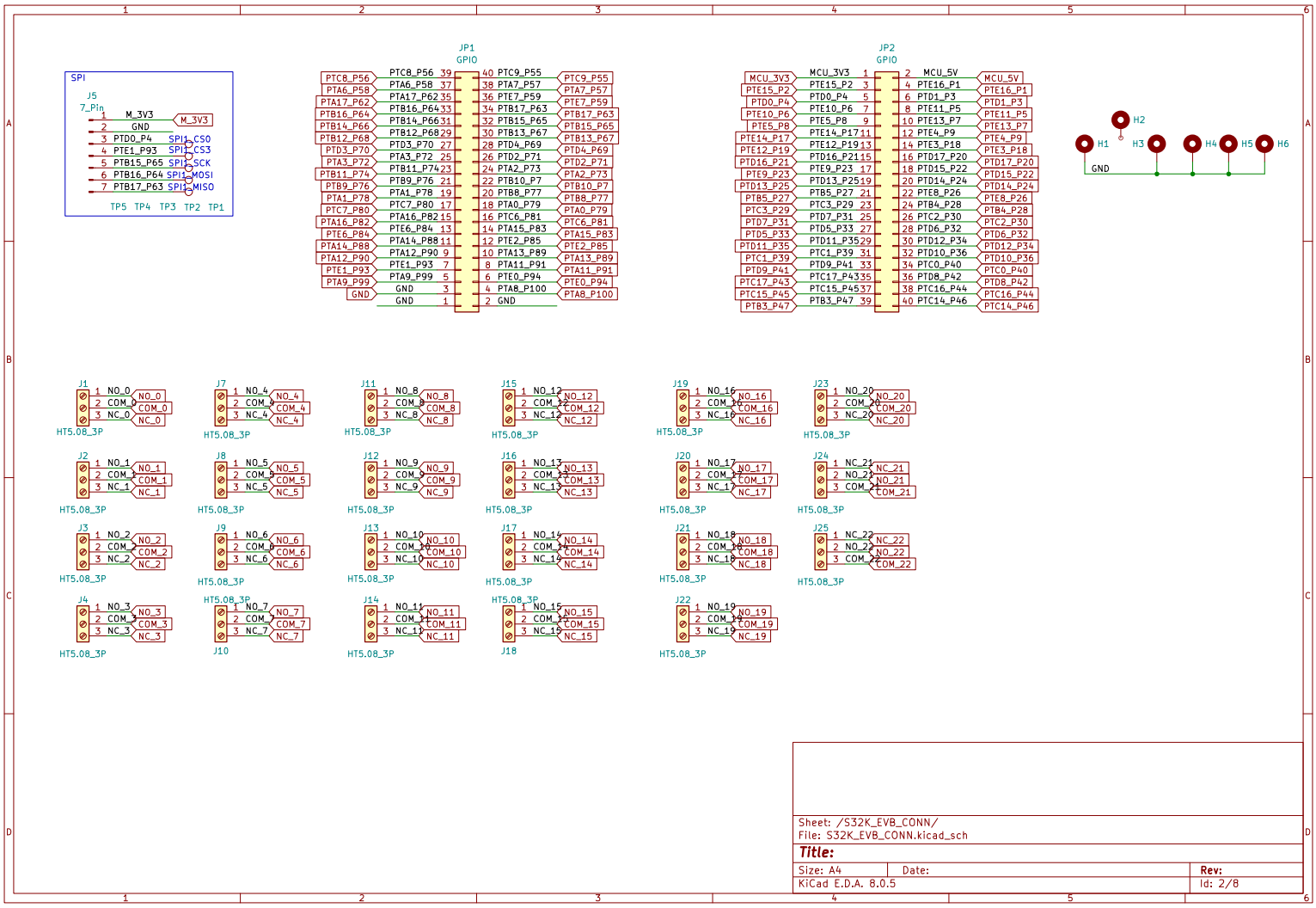

Sheet: /S32K_EVB_CONN/
File: S32K_EVB_CONN.kicad_sch

Title:

Size: A4	Date:	Rev:
KiCad E.D.A. 8.0.5		Id: 2/8

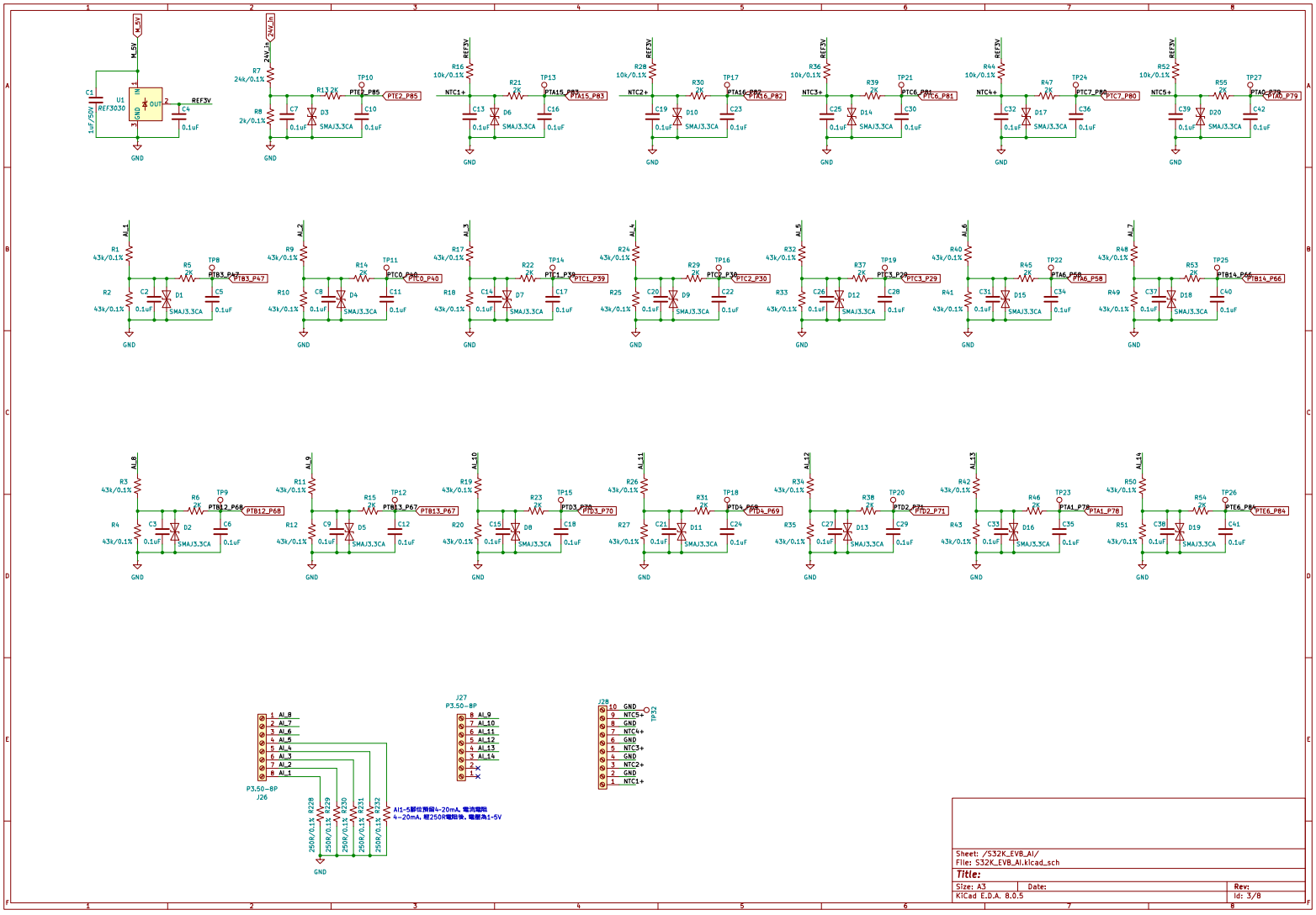

Sheet: /S32K_EVB_AI/
File: S32K_EVB_AI.kicad_sch

Title:

Size: A3	Date:	Rev:
KiCad E.D.A. 8.0.5		Id: 3/8

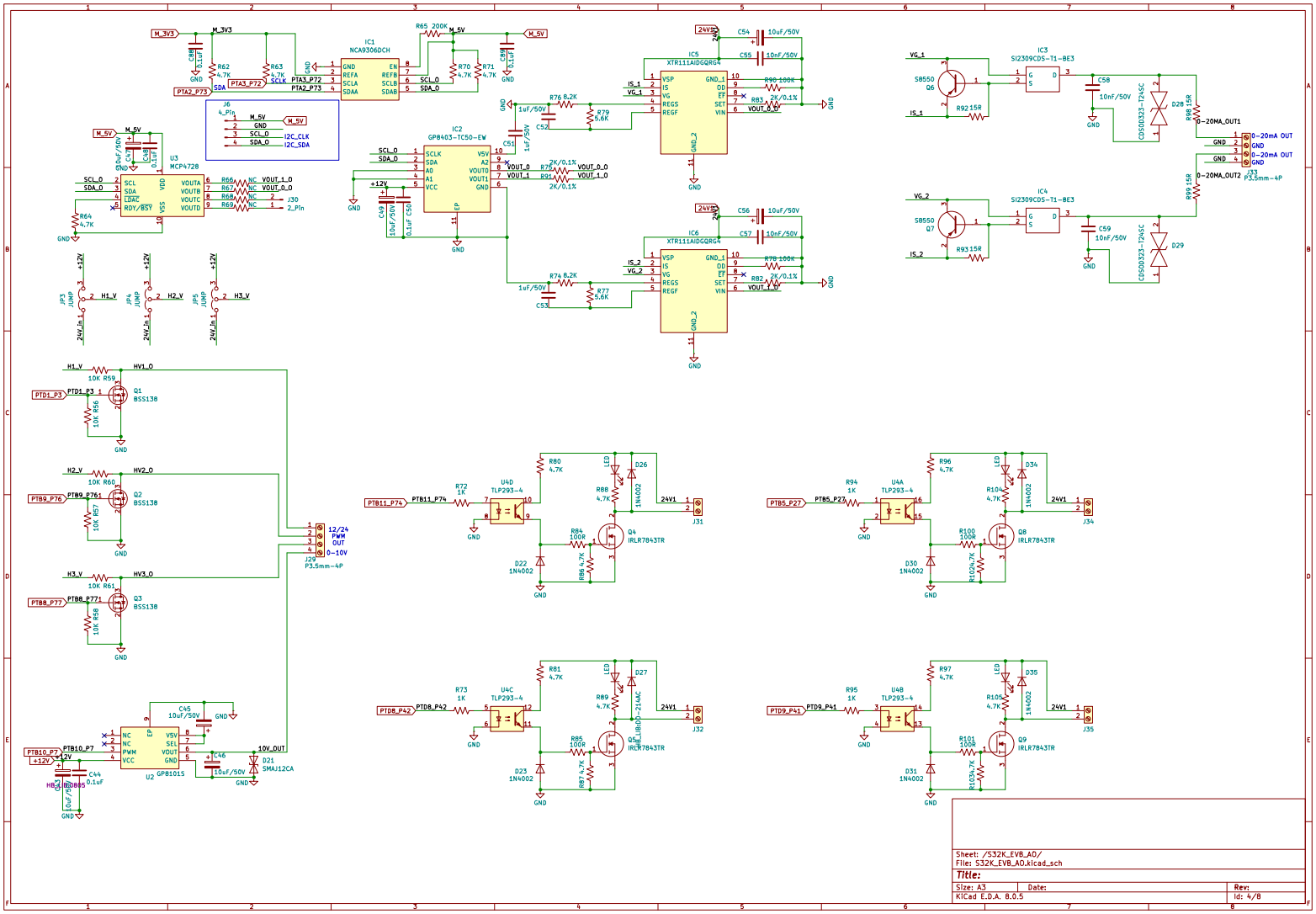
IC1
NCA9306DCH
IC2
GP8403-TC50-EW
IC5
XTR111AIDGQRG4
IC6
XTR111AIDGQRG4
IC3
SI2309CDS-T1-BE3
IC4
SI2309CDS-T1-BE3
U3
MCP4728
U2
GP8101S
U4D
TLP293-4
U4C
TLP293-4
U4A
TLP293-4
U4B
TLP293-4
Q1
BSS138
Q2
BSS138
Q3
BSS138
Q4
IRLR7843TR
Q8
IRLR7843TR
Q9
IRLR7843TR
J30
2_Pin
J31
J32
J33
P3.5mm-4P
J34
J35
J29
P3.5mm-4P
12/24
PWM
OUT
0-10V
0-20mA OUT
GND
0-20mA OUT
GND
0-20MA_OUT1
0-20MA_OUT2
M_3V3
M_5V
24V1
10V_OUT
I2C_CLK
I2C_SDA
SCL_0
SDA_0
VOUT_0_0
VOUT_1_0
VOUT_1_1
VOUT_0_1
IS_1
IS_2
VG_1
VG_2
H1_V
H2_V
H3_V
HV1_O
HV2_O
HV3_O
PTD1_P3
PTB9_P76
PTB8_P77
PTB11_P74
PTB5_P27
PTD8_P42
PTD9_P41
PTB10_P7
PTA2_P73
PTA3_P72
Sheet: /S32K_EVB_AO/
File: S32K_EVB_AO.kicad_sch
Title:
Size: A3
Date:
Rev:
KiCad E.D.A. 8.0.5
Id: 4/8

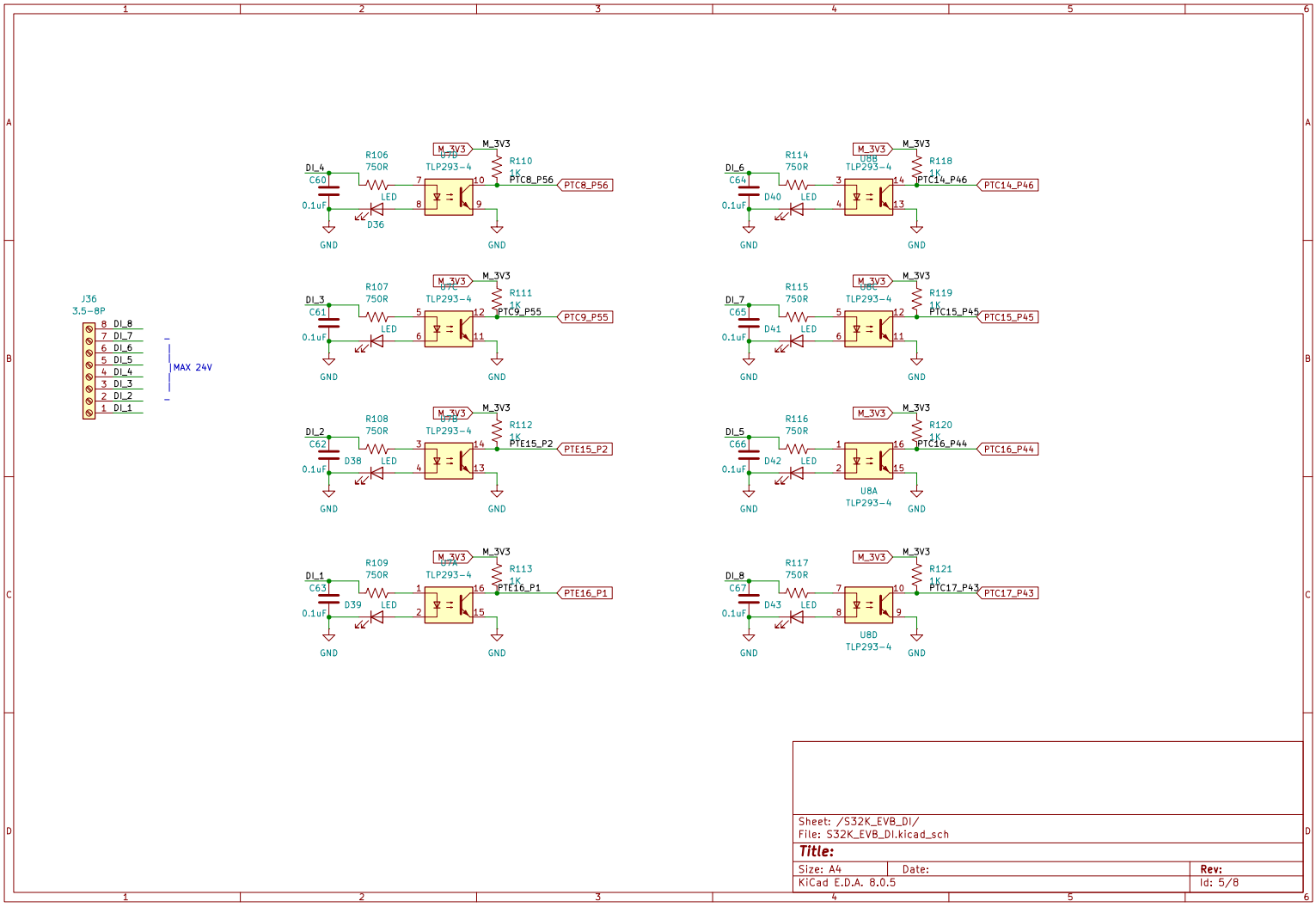

Sheet: /S32K_EVB_DI/
File: S32K_EVB_DI.kicad_sch

Title:

Size: A4	Date:	Rev:
KiCad E.D.A. 8.0.5		Id: 5/8

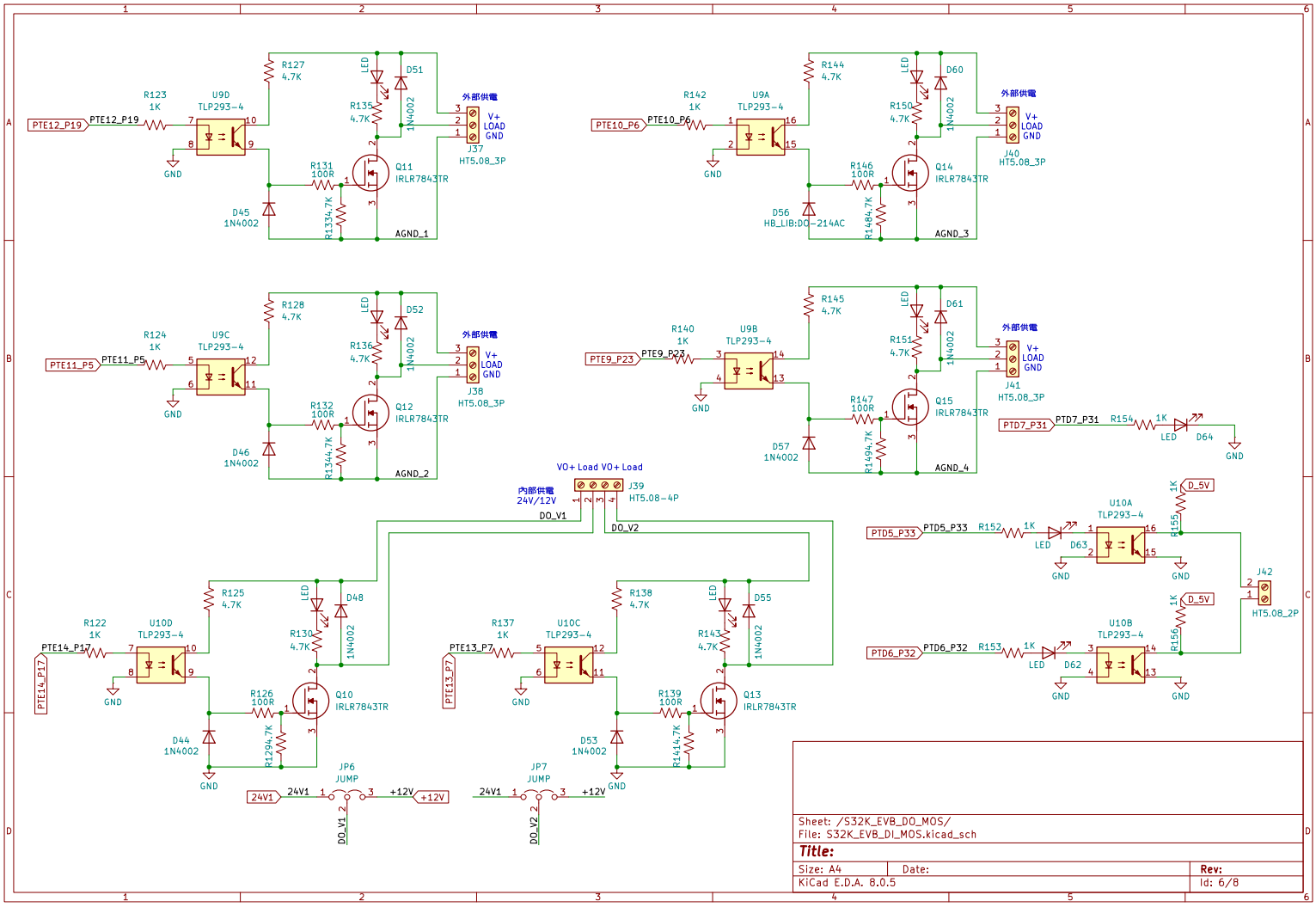

Sheet: /S32K_EVB_DO_MOS/
File: S32K_EVB_DI_MOS.kicad_sch

Title:

Size: A4	Date:	Rev:
KiCad E.D.A. 8.0.5		Id: 6/8

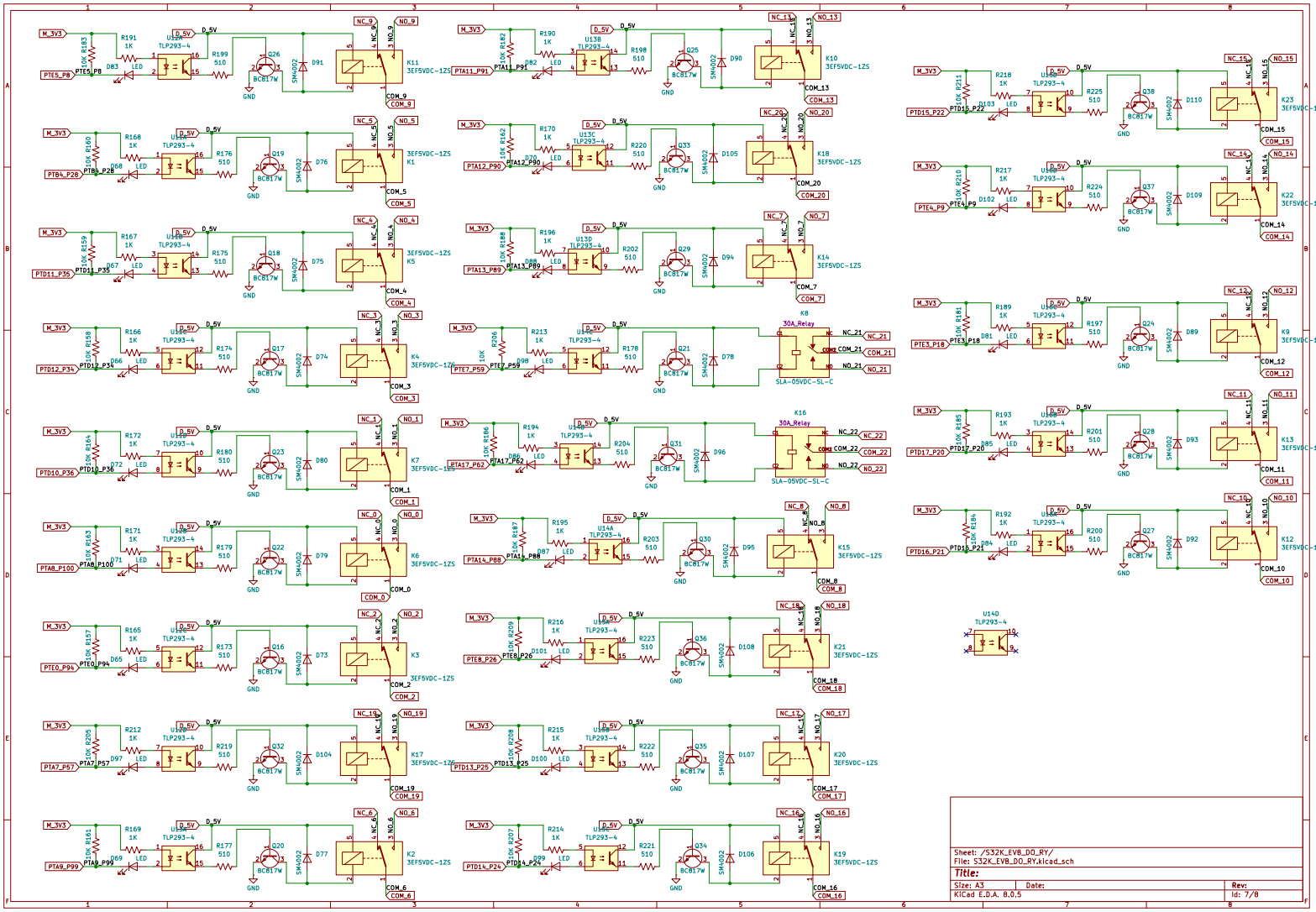
Sheet: /S32K_EVB_DO_RY/
File: S32K_EVB_DO_RY.kicad_sch
Title:
Size: A3
Date:
Rev:
KiCad E.D.A. 8.0.5
Id: 7/8

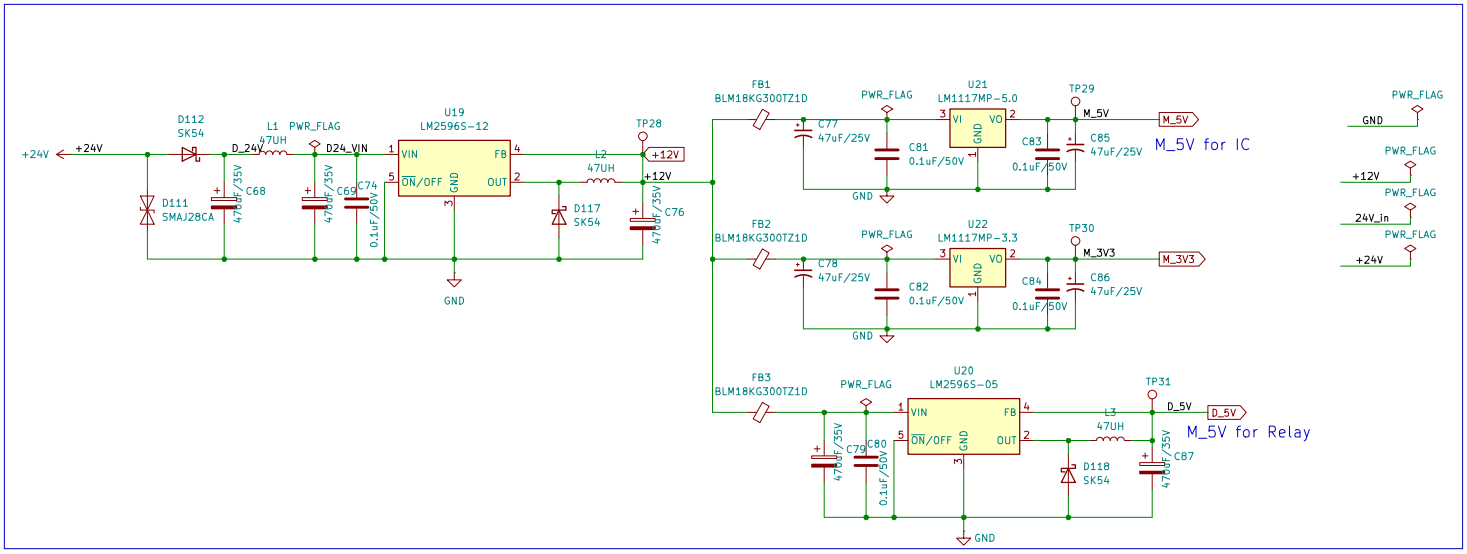

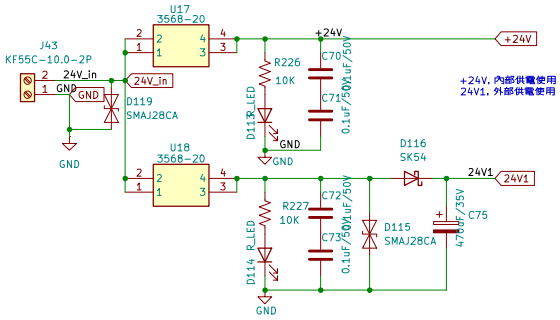

Sheet: /POWER/
File: S32K_EVB_PW.kicad_sch

Title:

Size: A4	Date:	Rev:
KiCad E.D.A. 8.0.5		Id: 8/8