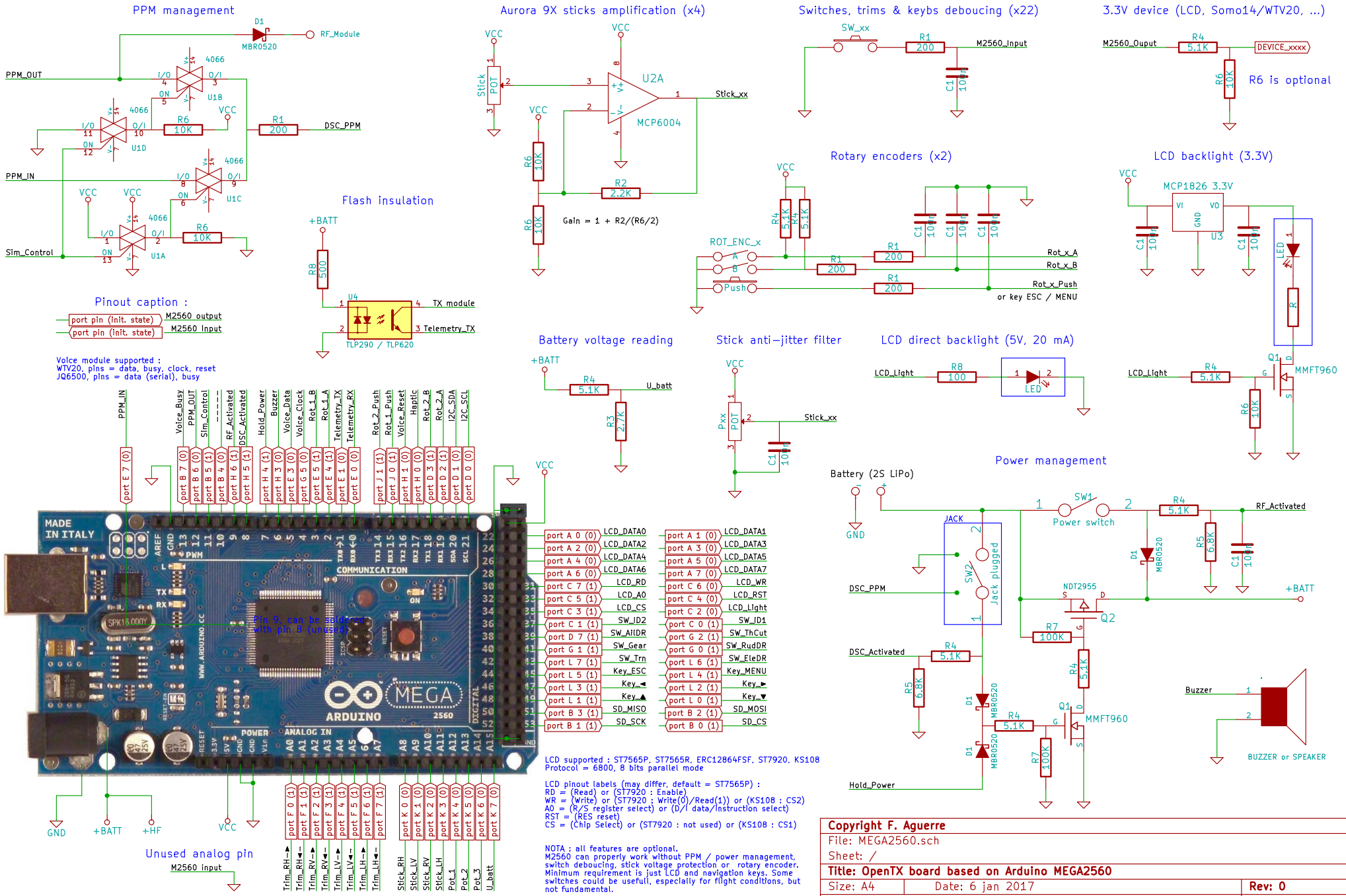
PPM management
D1
MBR0520
RF_Module
PPM_OUT
4066
U1B
U1D
U1C
U1A
R6
10K
R1
200
DSC_PPM
PPM_IN
Sim_Control
VCC
Aurora 9X sticks amplification (x4)
Stick
POT
U2A
MCP6004
Stick_xx
R2
2.2K
Gain = 1 + R2/(R6/2)
Switches, trims & keybs deboucing (x22)
SW_xx
M2560_Input
C1
100n
3.3V device (LCD, Somo14/WTV20, ...)
M2560_Ouput
R4
5.1K
DEVICE_xxxx
R6 is optional
Flash insulation
+BATT
R8
500
U4
TX_module
Telemetry_TX
TLP290 / TLP620
Rotary encoders (x2)
ROT_ENC_x
A
B
Push
Rot_x_A
Rot_x_B
Rot_x_Push
or key ESC / MENU
LCD backlight (3.3V)
MCP1826 3.3V
VI
VO
GND
U3
LED
R
Pinout caption :
port pin (init. state)
M2560 output
M2560 Input
Voice module supported :
WTV20, pins = data, busy, clock, reset
JQ6500, pins = data (serial), busy
Battery voltage reading
U_batt
R3
2.7K
Stick anti-jitter filter
Pxx
LCD direct backlight (5V, 20 mA)
LCD_Light
R8
100
Q1
MMFT960
PPM_IN
Voice_Busy
PPM_OUT
Sim_Control
RF_Activated
DSC_Activated
Hold_Power
Buzzer
Voice_Data
Voice_Clock
Rot_1_B
Rot_1_A
Telemetry_TX
Telemetry_RX
Rot_2_Push
Rot_1_Push
Voice_Reset
Haptic
Rot_2_B
Rot_2_A
I2C_SDA
I2C_SCL
MADE IN ITALY
COMMUNICATION
ARDUINO
MEGA
2560
POWER
ANALOG IN
DIGITAL
LCD_DATA0
LCD_DATA1
LCD_DATA2
LCD_DATA3
LCD_DATA4
LCD_DATA5
LCD_DATA6
LCD_DATA7
LCD_RD
LCD_WR
LCD_A0
LCD_RST
LCD_CS
LCD_Light
SW_ID2
SW_ID1
SW_AilDR
SW_ThCut
SW_Gear
SW_RudDR
SW_Trn
SW_EleDR
Key_ESC
Key_MENU
Key_◄
Key_►
Key_▲
Key_▼
SD_MISO
SD_MOSI
SD_SCK
SD_CS
GND
+BATT
+HF
VCC
Unused analog pin
M2560 input
Trim_RH◄
Trim_RH►
Trim_RV▲
Trim_RV▼
Trim_LV►
Trim_LV◄
Trim_LH►
Trim_LH◄
Stick_RH
Stick_LV
Stick_RV
Stick_LH
Pot_1
Pot_2
Pot_3
U_batt
Power management
Battery (2S LiPo)
JACK
SW1
Power switch
SW2
Jack plugged
NDT2955
Q2
R7
100K
R5
6.8K
D1
MBR0520
Buzzer
BUZZER or SPEAKER
LCD supported : ST7565P, ST7565R, ERC12864FSF, ST7920, KS108
Protocol = 6800, 8 bits parallel mode
LCD pinout labels (may differ, default = ST7565P) :
RD = (Read) or (ST7920 : Enable)
WR = (Write) or (ST7920 : Write(0)/Read(1)) or (KS108 : CS2)
A0 = (R/S register select) or (D/I data/Instruction select)
RST = (RES reset)
CS = (Chip Select) or (ST7920 : not used) or (KS108 : CS1)
NOTA : all features are optional.
M2560 can properly work without PPM / power management, switch debouncing, stick voltage protection or rotary encoder.
Minimum requirement is just LCD and navigation keys. Some switches could be useful, especially for flight conditions, but not fundamental.
Copyright F. Aguerre
File: MEGA2560.sch
Sheet: /
Title: OpenTX board based on Arduino MEGA2560
Size: A4
Date: 6 jan 2017
Rev: 0
KiCad E.D.A. eeschema (2013-07-07 BZR 4022)-stable
Id: 1/1