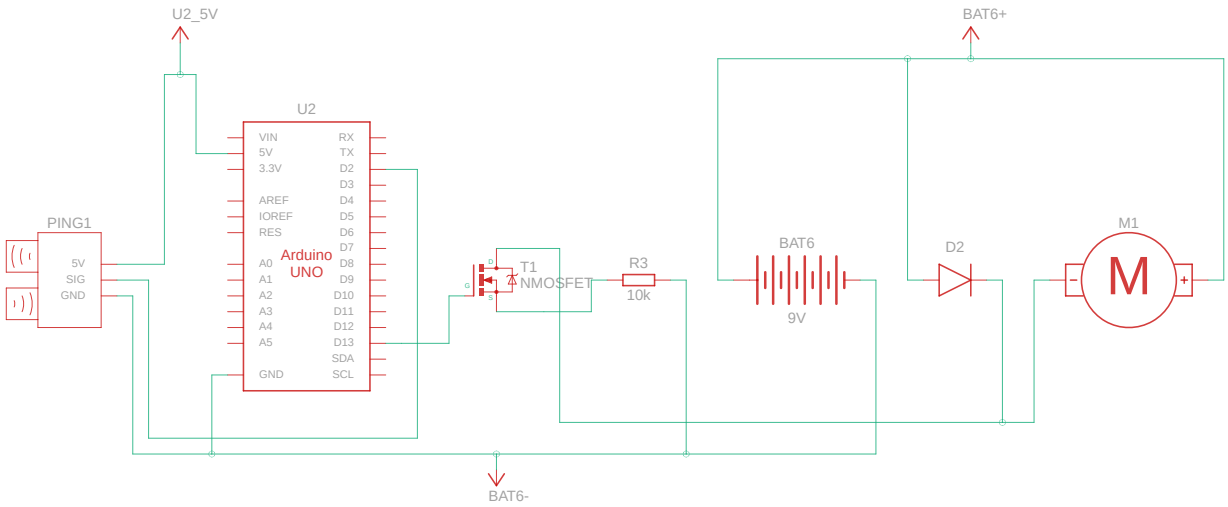

Made with Tinkercad®

Title: Copy of Smart Garage Door

Date: 3/24/2024, 12:42:42 PM

Sheet: 1/1