# Designing of AES-128 Encryption Algorithm Using System Verilog VLSI

1st Tarun Sai Gampala
*Department of ECE,*
*VIT-AP University, India*
gampalatarunsai@gmail.com

2nd Ashok Chakravarthy Pamarthy
*Department of ECE,*
*VIT-AP University, India*
ashokpamarthy@gmail.com

3rd C Sudhakara Reddy
*Department of ECE,*
sudhakar.dcp@gmail.com

2025 IEEE Wireless Antenna and Microwave Symposium (WAMS) | 979-8-3315-2554-5/25/$31.00 ©2025 IEEE | DOI: 10.1109/WAMS64402.2025.11158275

***Abstract*—This paper details a comprehensive study on the implementation of the Advanced Encryption Standard (AES) using Very Large Scale Integration (VLSI) technology for the purpose of creating efficient hardware-based encryption. AES is widely known for its strength in security, flexibility, and applicability in so many arenas-from data encryption in mobile devices to network communications. The focus of this discussion is the optimization of AES on critical performance metrics of VLSI: power consumption, processing speed, and silicon area efficiency. In this work, we addressed the relevant challenges posed by AES hardware with hardware-efficient pipelining techniques, using 128 bit key, latency has been reduced, and throughput improved; hence, devices with resource constraints are very beneficial for such architectures. Therefore, the findings of the study contribute to pushing forward such secure high-speed solutions in ICs, something much needed on surging demands in IoT as well as in embedded systems.**

***Index Terms*—System Verilog, Xilinx Vivado. Plain text, Encryption Key, Modified Booth's Algorithm.**

## I. INTRODUCTION

Protecting sensitive data and communications has become a top responsibility in the current digital era, necessitating the use of strong encryption methods. Rivest-Shamir-Adleman (RSA), the Advanced Encryption Standard (AES), and the Data Encryption Standard (DES) are some of the most significant. Widely respected for its speed, effectiveness and resilience to cryptanalytic attacks, AES was first introduced by the National Institute of Standards and Technology (NIST) in 2001 [**b1**] [**b4**]. Because of its vulnerability to brute-force attacks, AES has surpassed DES, an older symmetric-key encryption technique that helped establish contemporary cryptography [**b6**]. However, RSA, a well-known public-key cryptosystem, is excellent at asymmetric encryption, which makes digital authentication and safe key exchange possible. Since each of these algorithms has distinct advantages and disadvantages[**b5**]. AES is a popular option for real-time applications because of its outstanding performance, especially in hardware and software implementations. On the other hand, RSA provides strong secrecy and authentication features, making it indispensable for secure communications. Even though DES is mostly out of use now[**b6**], it is nonetheless important historically since it sheds light on how cryptography has changed over time. Comparing these methods demonstrates the careful balance that cryptographic systems achieve between security, computational efficiency, and usefulness, in addition to their technical distinctions. With an emphasis on their fundamental ideas, real-world applications, and performance indicators, this paper attempts to provide a thorough analysis of AES, DES, and RSA. In order to assess the relative effectiveness and applicability of DES and RSA, it also examines how AES is implemented in System Verilog. Hardware-based cryptography solutions have become increasingly popular due to improvements in computer technology, which provide quicker and more effective encryption and decryption. These advancements considerably benefit AES in particular, which makes it the perfect choice for time-sensitive applications and embedded devices. The comparative advantages of AES, DES, and RSA are assessed in this work along a number of criteria, such as resource usage, computing needs, and security resilience. Using knowledge from earlier studies and real-world applications, it offers a thorough examination of various encryption standards, emphasizing their applicability and function in contemporary secure communication systems[**b3**].

## II. LITERATURE REVIEW

The Advanced Encryption Standard (AES) algorithm has garnered a lot of attention recently due to its robustness and versatility in ensuring data security. Its applications cover a wide range of sectors, from wireless networks and robotics to multimedia and financial systems, and researchers are looking at how it might safeguard sensitive data in an increasingly digitized environment.

Chetna Sangwan, et al., illustrates the usefulness of cryptographic approaches like the Advanced Encryption Standard (AES) in securing sensitive data and the rising significance of information security in today's digital society[**b1**]. With key lengths of 128, 192, and 256 bits, AES is highly regarded for its robust security, effectiveness, and versatility. It is also noticeably more secure than more antiquated techniques like DES. This study demonstrates the efficiency of AES in terms of speed and defense against possible assaults by implementing it in hardware using VHDL. The study illustrates the usefulness of AES for safe applications by simulating and validating the encryption and decryption procedures using tools like Active-HDL. The findings are displayed through waveform analysis.

Authorized licensed use limited to: Nanyang Technological University Library. Downloaded on April 06,2026 at 13:43:03 UTC from IEEE Xplore. Restrictions apply.

Soumya V. H., et al., highlight the Advanced Encryption Standard (AES) as one of the most widely used cryptographic algorithms, known for its adaptability with variable key sizes of 128, 192, and 256 bits [**b2**]. Their research focuses on implementing AES using Verilog on the Xilinx ISE 14.7 platform, demonstrating its efficiency in reducing operation time and clock cycles for encryption and decryption processes compared to VHDL implementations. The study emphasizes AES's superiority over DES due to its larger key size, which enhances security. The design employs a modular approach, utilizing module calls for submodules, ensuring systematic operation. The application of AES in embedded systems further enhances security measures, making it a reliable solution for modern cryptographic needs.

Iyli Sagar, et al., talk about utilizing Verilog for coding and Xilinx tools for synthesis in order to develop and assess the Advanced Encryption Standard (AES) on FPGA using the Rijndael algorithm [**b3**]. The main focus is on AES-128, a symmetric block cipher that creates a uniquely transformed block of the same size by encrypting 128-bit data blocks under a key. The original plaintext is recovered by decryption using the same key. The study emphasizes how adaptable AES is and how well-suited it is for military uses. For high-speed applications, a non-LUT-based implementation of the AES S-box and inverse S-box is highlighted. Using Cadence SoC Encounter, the researchers also created a physical design of AES-128 and assessed its timing, power, and area performance.

Mrs. M. Saritha, et al., stress how important encryption is for protecting private digital information, including business conversations and financial transactions [**b4**]. They distinguish between two forms of encryption: symmetric (private key) and asymmetric (public key). Symmetric algorithms, such as AES, are easier to compute and more suited for VLSI implementation. Because of its fast throughput and real-time processing capabilities, AES, which was approved by NIST as a standard under FIPS-197, encrypts 128-bit data blocks and is often used in applications such as digital video recorders, web servers, and ATMs.

## III. METHODOLOGY

The systematic steps used to investigate the implementation and application of AES across numerous areas are primarily focused on design, experimentation, analysis, and synthesis. In order to safeguard data and get over challenges like evolving cyberthreats and computing constraints, the approach looks into how effective, adaptable, and resilient AES is. The Advanced Encryption Standard (AES) variant known as AES-128 uses a 128-bit key [**b1**]. It is generally accepted as a safe and effective encryption technique that may be used for a number of purposes, including secure communications and data encryption.

KEY FEATURES OF AES-128

- Block Size: Fixed at 128 bits (16 bytes).
- Key Length: 128 bits (16 bytes).
- Number of Rounds: 10 rounds of encryption.
- Symmetric Encryption: The same key is used for both encryption and decryption.

AES-128 uses the following structured procedure to encrypt 128-bit plaintext blocks with a 128-bit key:

1) Key Expansion.
2) Initial Round Key.
3) Main Rounds (1 to 9)
   a) Sub Bytes
   b) Shift Rows
   c) Mix Columns
   d) Add Round Key
4) Final Round 10th excludes Mix Columns.

### A. Round key Generation

A Key Schedule approach is used to compute all round keys from the key. The initial key is used to produce several round keys that will be used in the corresponding encryption round.

AES-128 uses the original 128-bit key to create 11 round keys for every encryption round (10 rounds + 1 beginning key). The initial 128-bit encryption key is used to generate a number of round keys in the AES-128 round key creation procedure. The process makes advantage of deterministic modifications to ensure that each round key is generated securely and in a unique way.

It increases the security of the algorithm by ensuring that even small changes to the input key produce noticeably different round keys.

The 128-bit key K is divided into 4 words $w[0], w[1], w[2], w[3]$ and Each word is 32 bits long. We initially circular left shift of root word $(w[i-1]) = (b1, b2, b3, b0)$. We then substitute the bytes using Sbox to get new values. Now we add round key $Rcon[j]$ to get $g(w[i-1]) = (s1 \oplus r1, s2, s3, s0)$. This transformed word g(w[i-1]) is then used in the key expansion equation.

$$w[i] = w[i-4] \oplus g(w[i-1])$$

### B. Initial Round key

Using the initial input key, we perform XOR operations to corresponding entities of State Matrix and initial round key to obtain new state matrix.

The non-linear layer is for the resistance differential and linear cryptanalysis attacks.

### C. Substitution Bytes

The Substitution Bytes (SubBytes) transformation is one of the most crucial phases in the AES encryption and decryption process. By adding nonlinearity, it renders the cipher impervious to both linear and differential cryptanalysis. This

Authorized licensed use limited to: Nanyang Technological University Library. Downloaded on April 06,2026 at 13:43:03 UTC from IEEE Xplore. Restrictions apply.

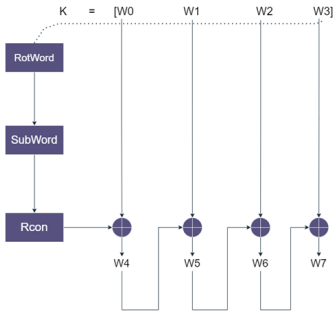


Fig. 1. AES Key Schedule

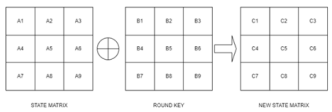


Fig. 2. AES Round Key

transformation operates at the byte level by substituting a matched value from the AES substitution box (S-Box) for every byte in the state matrix [**b7**].

| | 0 | 1 | 2 | 3 | 4 | 5 | 6 | 7 | 8 | 9 | A | B | C | D | E | F |
|---|---|---|---|---|---|---|---|---|---|---|---|---|---|---|---|---|
| **0** | 63 | 7C | 77 | 7B | F2 | 6B | 6F | C5 | 30 | 1 | 67 | 2B | FE | D7 | AB | 76 |
| **1** | CA | 82 | C9 | 7D | FA | 59 | 47 | F0 | AD | D4 | A2 | AF | 9C | A4 | 72 | C0 |
| **2** | B7 | FD | 93 | 26 | 36 | 3F | F7 | CC | 34 | A5 | E5 | F1 | 71 | D8 | 31 | 15 |
| **3** | 4 | C7 | 23 | C3 | 18 | 96 | 5 | 9A | 7 | 12 | 80 | E2 | EB | 27 | B2 | 75 |
| **4** | 9 | 83 | 2C | 1A | 1B | 6E | 5A | A0 | 52 | 3B | D6 | B3 | 29 | E3 | 2F | 84 |
| **5** | 53 | D1 | 0 | ED | 20 | FC | B1 | 5B | 6A | CB | BE | 39 | 4A | 4C | 58 | CF |
| **6** | D0 | EF | AA | FB | 43 | 4D | 33 | 85 | 45 | F9 | 2 | 7F | 50 | 3C | 9F | A8 |
| **7** | 51 | A3 | 40 | 8F | 92 | 9D | 38 | F5 | BC | B6 | DA | 21 | 10 | FF | F3 | D2 |
| **8** | CD | 0C | 13 | EC | 5F | 97 | 44 | 17 | C4 | A7 | 7E | 3D | 64 | 5D | 19 | 73 |
| **9** | 60 | 81 | 4F | DC | 22 | 2A | 90 | 88 | 46 | EE | B8 | 14 | DE | 5E | 0B | DB |
| **A** | E0 | 32 | 3A | 0A | 49 | 6 | 24 | 5C | C2 | D3 | AC | 62 | 91 | 95 | E4 | 79 |
| **B** | E7 | C8 | 37 | 6D | 8D | D5 | 4E | A9 | 6C | 56 | F4 | EA | 65 | 7A | AE | 8 |
| **C** | BA | 78 | 25 | 2E | 1C | A6 | B4 | C6 | E8 | DD | 74 | 1F | 4B | BD | 8B | 8A |
| **D** | 70 | 3E | B5 | 66 | 48 | 3 | F6 | 0E | 61 | 35 | 57 | B9 | 86 | C1 | 1D | 9E |
| **E** | E1 | F8 | 98 | 11 | 69 | D9 | 8E | 94 | 9B | 1E | 87 | E9 | CE | 55 | 28 | DF |
| **F** | 8C | A1 | 89 | 0D | BF | E6 | 42 | 68 | 41 | 99 | 2D | 0F | B0 | 54 | BB | 16 |

Fig. 3. SBox

This provides strong resistance to known attacks and contributes significantly to the avalanche effect.

### D. Shift Rows

The Shift Rows transformation is a basic stage in the AES encryption process. It facilitates diffusion by shifting the bytes in each row of the state matrix, increasing the complexity and security of the encryption [**b8**].

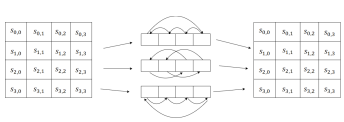

Fig. 4. Shift Row Transformation

The Shift Rows transformation is essential to AES's overall security and functioning. By changing the rows of the state matrix, it aids in the cipher's diffusion and ensures a robust and secure encryption scheme.

### E. Mix Columns

The MixColumns transformation is a crucial diffusion step in the AES encryption procedure. By modifying the state matrix column by column, it guarantees that the bits in every column are dispersed equally. This step improves the strength of AES by making it more resistant to differential and linear cryptanalysis. The Mix Columns transformation involves treating each column of the state matrix as a polynomial over $GF(2^8)$ (Galois Field) and multiplying it by a fixed polynomial:

$$C(x) = 03x^3 + 01x^2 + 01x + 02$$

This operation performed modulo $x^4 + 1$.

$$\begin{bmatrix} 02 & 01 & 03 & 01 & 01 & 01 & 01 & 01 \\ 01 & 03 & 01 & 02 & 02 & 01 & 01 & 03 \\ 03 & 01 & 02 & 01 & 01 & 02 & 03 & 01 \\ 01 & 01 & 01 & 02 & 01 & 01 & 02 & 03 \\ 01 & 01 & 02 & 01 & 03 & 01 & 01 & 01 \\ 01 & 01 & 01 & 02 & 01 & 01 & 02 & 01 \\ 01 & 01 & 02 & 01 & 01 & 03 & 01 & 02 \\ 01 & 02 & 01 & 03 & 01 & 01 & 01 & 01 \end{bmatrix} \begin{bmatrix} s_0 \\ s_1 \\ s_2 \\ s_3 \\ s_4 \\ s_5 \\ s_6 \\ s_7 \end{bmatrix} = \begin{bmatrix} s'_0 \\ s'_1 \\ s'_2 \\ s'_3 \\ s'_4 \\ s'_5 \\ s'_6 \\ s'_7 \end{bmatrix} \quad (1)$$

MixColumns, an essential component of AES encryption, combines bytes in each state matrix column to enhance dispersion. This phase collaborates with ShiftRows and SubBytes to ensure that the AES algorithm provides strong security and resists cryptographic attacks. MBE is used to achieve better multiplication speed compared to traditional multiplication methods.

### F. Modified Booth's Multiplication Algorithm

By reducing the number of partial products, the Modified Booth Algorithm (MBA) is an effective multiplication method that significantly increases performance and hardware efficiency. Applications that need high-speed arithmetic operations, such as digital signal processing and cryptography systems, benefit the most from it. [**b11**]

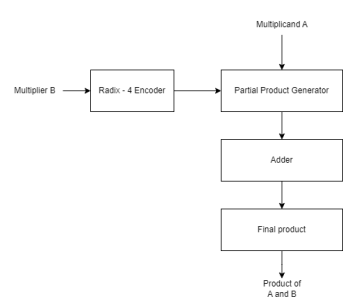


Fig. 5. Block Diagram of Modified Booth's Algorithm

The fundamental idea behind Modified Booth's Algorithm is to reduce computing complexity by generating fewer partial products and encoding the multiplier in groups of three bits (radix-4). Booth encoding, which reduces the multiplier to a smaller set of operations including shifts and additions/subtractions, accomplishes this.[**b11**]

Authorized licensed use limited to: Nanyang Technological University Library. Downloaded on April 06,2026 at 13:43:03 UTC from IEEE Xplore. Restrictions apply.

### G. Steps looping

Now for the obtained state matrix, we perform the round key using the resultant round key generated in the step Round key Generation. We perform all the steps step by step nine times and at the 10th step we perform all the mentioned steps except mixcolumns step. Each of the next nine rounds consists of four major phases: SubBytes, ShiftRows, MixColumns, and AddRoundKey. Every byte in the state matrix is replaced in the SubBytes stage using a fixed substitution box (S-Box). This improves the encryption process's resistance against linear attacks by introducing non-linearity. The ShiftRows step then cyclically moves the rows of the state matrix to enhance diffusion and interleave the bytes. Then, the data is further diffused using the MixColumns operation, which mixes the columns of the state matrix linearly by multiplying them by a fixed polynomial in $GF(2^8)$. The AddRoundKey step finally XORs the modified state matrix with the round-specific key generated during the Key Expansion process to ensure that each round produces unique intermediate results.

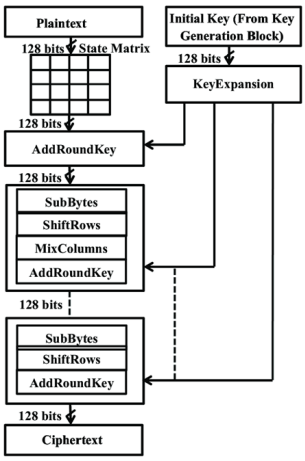


Fig. 6. AES Encryption Block Diagram

## IV. DESIGN AND IMPLEMENTATION

This section explains the design and implementation of the Advanced Encryption Standard (AES) algorithm for hardware execution using a 128-bit key and VLSI (Very Large-Scale Integration) techniques. The primary objectives are high performance, full compliance with the AES standard, and efficient use of resources. The method offers lower latency and maximum hardware efficiency. The process's essential components—key expansion and frequent state matrix modifications, for example—all aim to balance security and performance. Its modular design makes it easy to integrate into a range of hardware systems, making it perfect for applications with constrained resources and scenarios needing fast cryptographic operations. When creating AES, a byte data block is encoded using SystemVerilog.

This process in the code is continued for all 10 rounds. Here plain text and key are given to the system. The system converts the ASCII values to hexadecimal values and then performs all the steps necessary for the AES encryption of the plain text.

### A. RESULTS AND OBSERVATION

Simulation result of encryption is shown in the figure 7

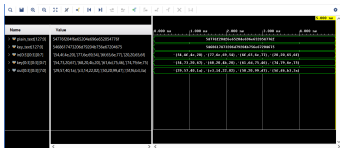

Fig. 7. Simulation Waveform Output

Result of Schematic is shown in the figure 8

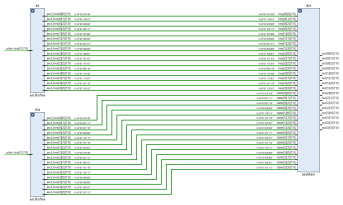

Fig. 8. Simulation Schematic Output

## V. ADVANTAGES OF AES OVER OTHER ALGORITHMS

### A. Security

Because of its longer key lengths, AES (Advanced Encryption Standard) provides noticeably more security than DES (Data Encryption Standard). Because AES has key lengths of 128, 192, and 256 bits, it is significantly more resilient to brute-force assaults than DES, which employs a fixed 56-bit key. This is especially true for longer keys. However, the computational complexity of factoring big composite numbers is the foundation of RSA (Rivest-Shamir-Adleman). RSA is less effective for encryption and decryption operations because it needs far longer keys to match the security level of AES [**b5**].

### B. Performance

Whether it is used in hardware or software, AES is meant to be quick and effective. High-speed encryption and decoding are made possible by its structure, which is tailored for contemporary CPUs. Although DES has a rather quick hardware, its antiquated design makes it difficult to use in software and isn't appropriate for modern computer settings. RSA is slower and more computationally intensive than AES and DES, especially when it comes to encrypting or decrypting huge data sets. This is especially true of its larger key lengths [**b5**].

Authorized licensed use limited to: Nanyang Technological University Library. Downloaded on April 06,2026 at 13:43:03 UTC from IEEE Xplore. Restrictions apply.

| Parameter | DES | RSA | AES |
|---|---|---|---|
| **Bit Size** | 64 | 1024 | 128 |
| **Key Size** | 56 | 1024 | 128 |
| **Block Size** | 64 | 64 | 128 |
| **Speed** | Slow | Slow | Fast |
| **Security** | Low | High | High |

TABLE I
CAPTION

### C. Versatility

AES is a symmetric encryption method that is perfect for protecting data whether it is in transit or at rest. It is a flexible and dependable option since it is frequently used in applications like disk encryption, data encryption, and secure communications. Although DES, another symmetric encryption technique, may accomplish same goals, its shorter key length makes it less secure than AES. On the other hand, RSA is an asymmetric encryption method that is mostly employed for secure communications, digital signatures, and key exchanges. It is computationally less efficient than AES and is not appropriate for encrypting huge amounts of data [**b5**].

### D. Advantages of Modified Booth's Algorithm

When radix-4 encoding is used instead of conventional binary multiplication, the number of partial products is practically cut in half. MBA speeds up the multiplication operation by minimizing the number of calculations. Using fewer logic gates and adders, the algorithm maximizes hardware resources. An efficient multiplication technique like MBA improves performance because AES requires extensive modular arithmetic.[**b11**]

Better area and speed trade-offs are obtained by Modified Booth's Algorithm in comparison to Dadda multipliers, Booth's algorithm and traditional array multipliers. Array multipliers require more delay cycles and use more power while having a straightforward and regular construction. However, while using an effective reduction procedure, dadda multipliers still produce more partial products than Booth's encoding. [**b11**, **b12**]

| Feature | MBA | Dadda | Array |
|---|---|---|---|
| Partial Products | Reduced | Moderate | Maximum |
| Speed | Fast | Faster | Slow |
| Complexity | Moderate | High | Low |
| Power Consumption | Low | Moderate | High |
| Area Utilization | Efficient | Larger | Large |
| AES Suitability | High | Suitable | Low |

TABLE II
COMPARISON OF MULTIPLIERS

## VI. CONCLUSION

The design and implementation of the Advanced Encryption Standard (AES) with a 128-bit key, optimized for hardware execution utilizing VLSI methods, are presented in this research article. This study emphasizes the effectiveness and resilience of AES in guaranteeing data security by methodically examining its fundamental elements: Key Expansion, SubBytes, ShiftRows, MixColumns, and AddRoundKey. The solution offers great performance, scalability, and compliance with contemporary cryptographic requirements by utilizing AES's structural benefits. Modified Booth's Algorithm enhances hardware usage and computational efficiency in hardware-oriented applications like AES encryption. It is the recommended option for high-performance cryptographic processors because to its capacity to reduce latency and maximize power consumption.

AES is more secure, effective, and versatile for a wider range of applications than other encryption algorithms like DES and RSA. It is a future-ready encryption standard due to its possible quantum resistance, compatibility with contemporary technology, and resistance against brute-force assaults. AES's throughput and resource use are further improved by its incorporation into hardware via VLSI, which makes it perfect for applications needing safe and quick data processing. This study confirms AES's status as a fundamental component of contemporary cryptography and emphasizes its applicability in tackling the always changing problems associated with data security.

## REFERENCES


[1] C. Sangwan, C. Bhardwaj, Nisha, and T. Sikka, "VLSI Implementation of Advanced Encryption Standard," in *2012 Second International Conference on Advanced Computing and Communication Technologies*, Rohtak, India, 2012.

[2] V. H. Soumya, M. B. Neelagar and K. V. Kumaraswamy, "Designing of AES Algorithm using Verilog," 2018 4th International Conference for Convergence in Technology (I2CT), Mangalore, India, 2018,

[3] Iyli Sagar and U Eranna, "DESIGN AND IMPLEMENTATION OF ADVANCED ENCRYPTION ALGORITHM WITH FPGA AND ASIC," International Journal of Electrical and Electronic Engineering and Telecommunications, Vol. 3, No. 3, pp. 102-110, July 2014.

[4] Saritha, Mrs and S, Ranjith and R, Vishvanth and R, Vijay. (2023). VLSI Implementation of AES Algorithm in Cryptography Developed in Xilinx. International Journal of Advanced Research in Science, Communication and Technology. 558-562. 10.48175/IJARSCT-9617.

[5] K. Srinivasan, A. Akash, P. Jaiganesh and M. Mahizhan, "A VLSI Perspective on Encryption Algorithm Analysis," 2024 International Conference on Communication, Computing and Internet of Things (IC3IoT), Chennai, India, 2024.

[6] P. Kumar Tiwari, V. Choudhary and S. Raj Aman, "Analysis and Comparison of DES, AES, RSA Encryption Algorithms," 2022 4th International Conference on Advances in Computing, Communication Control and Networking (ICAC3N), Greater Noida, India, 2022, pp. 1913-1918.

[7] Taha, Zahraa & Sc, M. (2016). Text Encryption using Modified AES-2 Keys. 975-8887.

[8] Vadaviya, Drashti & Tandel, Purvi. (2015). Study of Avalanche Effect in AES.

[9] Moh'd, Abidalrahman & Jararweh, Yaser & Tawalbeh, Loai. (2011). AES-512: 512-Bit Advanced Encryption Standard algorithm design and evaluation. Proceedings of the 2011 7th International Conference on Information Assurance and Security, IAS 2011. 292-297. 10.1109/ISIAS.2011.6122835.

[10] Zodpe, Harshali & Sapkal, Ashok. (2018). An Efficient AES Implementation using FPGA with Enhanced Security Features. Journal of King Saud University - Engineering Sciences. 32. 10.1016/j.jksues.2018.07.002.

[11] Kaur, Sukhmeet & Manna, Manpreet. (2013). Implementation of Modified Booth Algorithm (Radix 4) and its Comparison with Booth Algorithm (Radix-2). Advance in Electronic and Electric Engineering ISSN 2231-1297. 3. 683-690.

[12] Palaniappan, Ramanathan & Ponnusamy, Anitha & Kowsalya, P. (2015). Modified Low Power DADDA Multiplier using Higher Order Compressors. IJAER. 10. 7287-7291. 10.1080/21681724.2016.1138509.


Authorized licensed use limited to: Nanyang Technological University Library. Downloaded on April 06,2026 at 13:43:03 UTC from IEEE Xplore. Restrictions apply.