5-Stage Pipelined CPU on Tang Nano 20K

Project Overview

You designed and implemented a **5-stage pipelined CPU** using the Sipeed Tang Nano 20K FPGA, accompanied by a live web-based dashboard for performance monitoring via USB Serial. The system provides an in-depth look at pipeline behavior, hazards (like branch mispredictions), and real-time performance stats, making it both instructional and practical for understanding CPU design.

Pipeline Stages Recap

The 5 pipeline stages are:

1. **Instruction Fetch (IF):** Fetch the instruction from memory.
2. **Instruction Decode (ID):** Interpret opcode, read registers, generate control signals.
3. **Execute (EX):** Perform ALU computation/memory address calculation.
4. **Memory Access (MEM):** Read from or write to data memory (if required).
5. **Write Back (WB):** Store the result into a register.

This structure enables multiple instructions to be in-flight, one per stage, allowing for high throughput similar to an assembly line.

Cake Factory Analogy for the 5-Stage Pipeline

Imagine a cake factory with five workers, one at each station:

- **Worker 1 (IF):** Collects a new cake order (fetches a recipe).
- **Worker 2 (ID):** Reads the recipe and grabs ingredients (decodes and gets required data).
- **Worker 3 (EX):** Mixes and bakes the cake (performs computation).
- **Worker 4 (MEM):** Adds toppings or fillings (memory access – extra ingredients).
- **Worker 5 (WB):** Packs the cake and puts it on the delivery counter (writes back result).

As soon as Worker 1 is done with one order, they can start the next, allowing multiple cakes (instructions) to be worked on at once. Sometimes, if ingredients (data) are missing or an urgent order (branch) changes the queue, some workers may stop until things are ready (hazards and stalls).

Front End Dashboard & Visualization

You built a web dashboard (screenshots attached) that connects to the Tang Nano 20K board using the **Web Serial API**. The dashboard visualizes live metrics from your hardware CPU. Here's how the front end and data pipeline work:

Key Dashboard Features:

- **Real-time Monitoring:** See CPI (cycles per instruction), branch mispredictions, instructions executed, and misprediction rates update live.
- **Scenario Selection:** Test different workload scenarios (high/low branch frequency, branch misprediction, best/worst case CPI, etc.).
- **Comparison Table:** Directly compares Single-Cycle and 5-Stage Pipeline CPU stats (clock frequency, CPI, cycles, mispredictions, etc.).
- **Time-Series Graphs:** Track CPI and branch misprediction rate changes over time, highlighting pipeline dynamics and potential stalls.
- **Speed Controls:** Adjust simulation pace for step-by-step or real-time analysis.

Metrics and Results:

- **Max Clock Frequency:** 80 MHz for pipelined vs 25 MHz for single-cycle.
- **Typical CPI:** 1.11–1.19 for pipelined, 1.0 for single-cycle (ideal).
- **Branch Misprediction Rate:** ~17% in both.
- **Total Cycles:** Pipeline reduces total cycles compared to a single-cycle design for large programs, but hazards (like mispredictions) cause slight CPI overhead.
- **Speedup Factor:** Often close to 1x in these tests, but can be higher in optimal scenarios, especially with longer programs and fewer hazards.

Pipeline Utility Example:

- **getOneCycleCycles** returns cycles for single-cycle: one cycle per instruction.
- **getFiveCycleCycles** returns cycles for 5-stage pipeline: instructions + 4 (for pipeline fill).

Technical Integration Highlights

- **Web Serial API** is used for device communication, supporting live updates and easy cross-platform use (Chrome/Edge required).
- **Serial Protocol:** CPU performance stats are sent from hardware as (likely) JSON objects to the dashboard app, parsed and visualized instantly.
- **Charts:** Real-time data is visualized using line charts for trends like CPI and branch prediction behavior.

Overall Learning & Practical Skills

- This project covers real CPU design (HDL implementation), performance bottleneck analysis, pipeline hazards, and software-hardware integration.
- The dashboard provides instant insight into effects of pipeline stalls, hazards, and control logic on real hardware, moving beyond simulation.

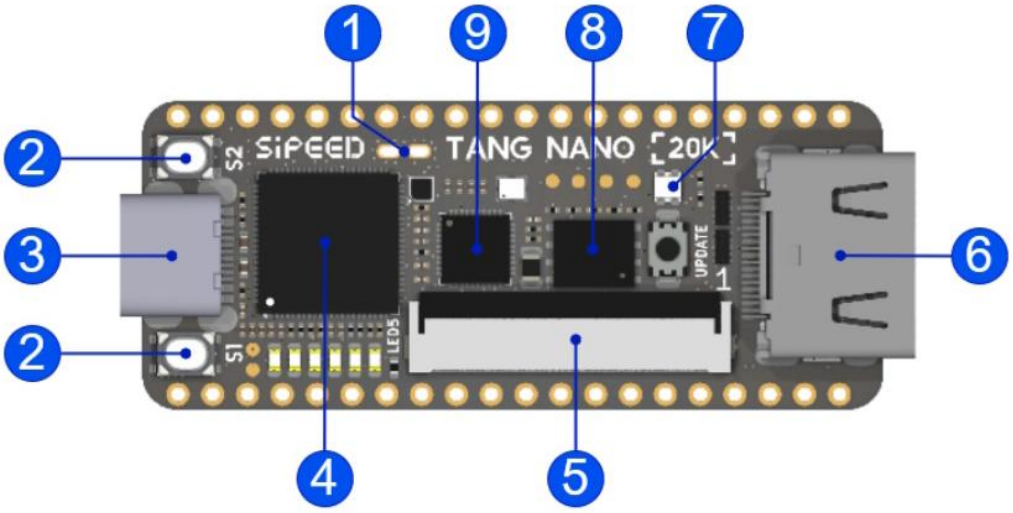

1 Speaker Out

2 User Buttons

3 USB Debug

4 GA2AR-LV18

5 MIPI DPI Conn.

6 TMDS Video Out

7 WS2812 LED

8 Flash 9 BL616

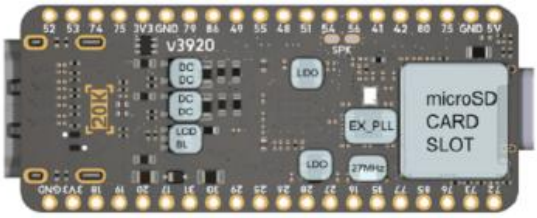

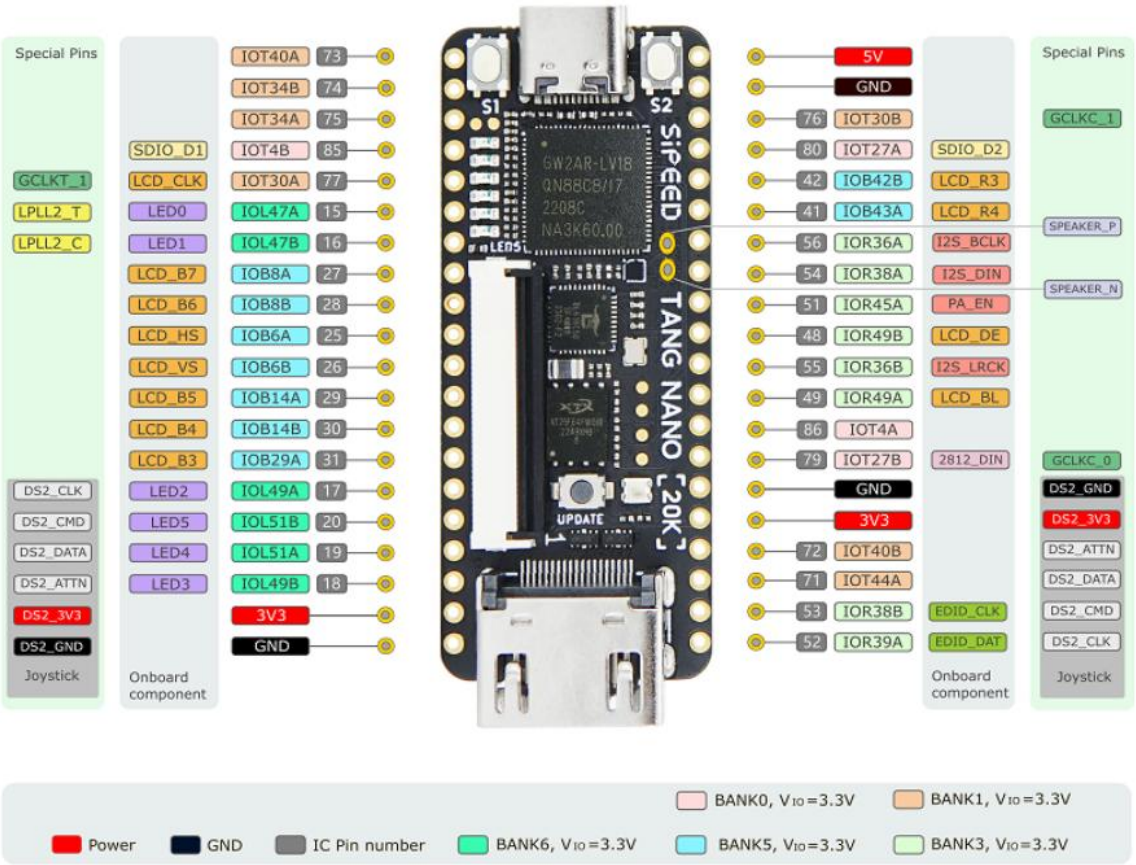

https://github.com/sipeed/TangNano-20K-example