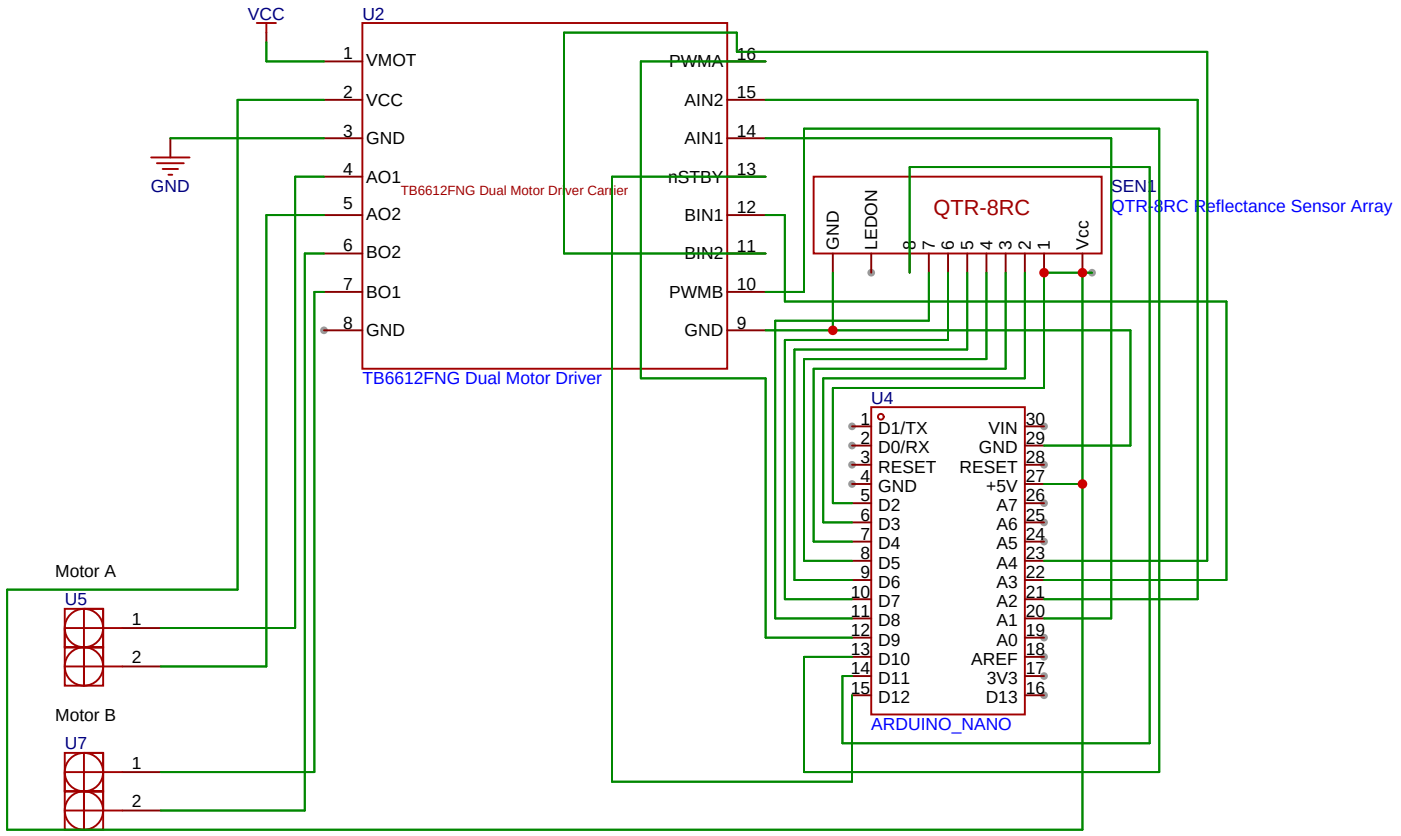

Schematic	Schematic2	Create at	2025-03-08
		Update at	2025-03-08
Board	Board1	Page	P1
Drawn		LFR_RobotV2_PCB	
Reviewed			
		Version	Size	Page 1 Total 1
EasyEDA		V1.0	A4	EasyEDA.com